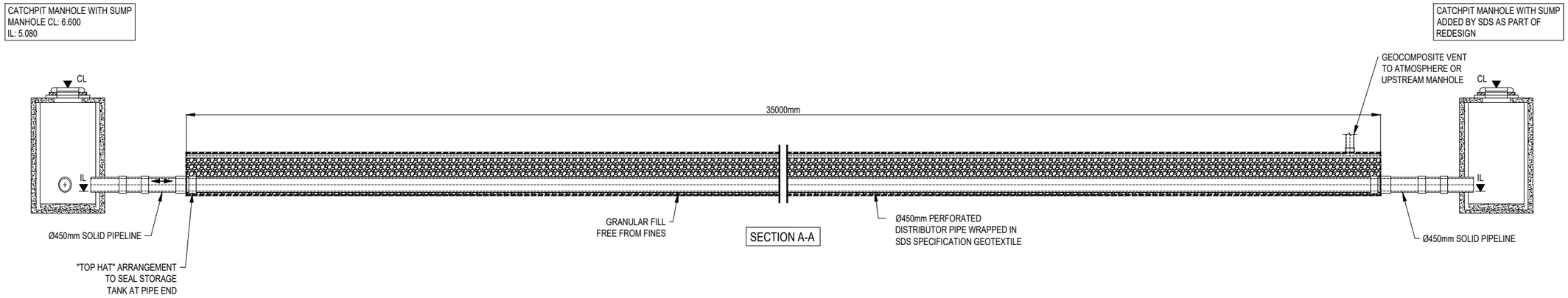

SECTION A-A

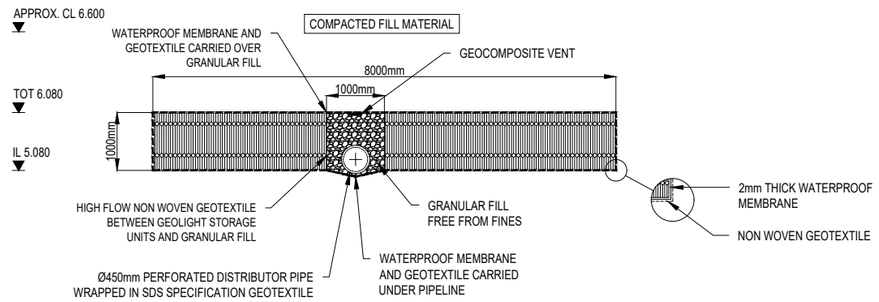

SECTION B-B

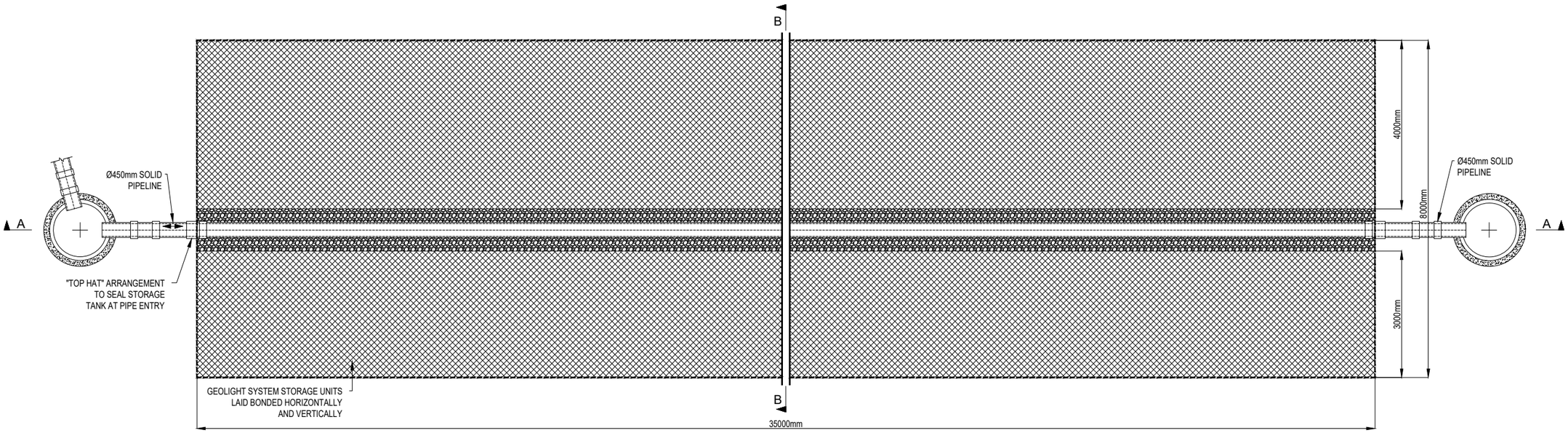

Notes:

This Drawing is to be read in conjunction with all relevant Architect's Engineer's and specialists' drawings and specifications.

Do not scale from this drawing in either paper or digital form. Use written dimensions only.

SDS to leave solid stub only, exiting tank for connection by others.

All external Manholes, Access Points, Junctions & Pipe are shown for guidance only and not part of the SDS program unless otherwise agreed.

Rev	Comments	Date	DRW	CHK
B	TANK DEPTH AMENDED	27.08.19	GM	GM
	ISSUED FOR APPROVAL			
A	LEVELS AMENDED	18.07.19	GM	GM
	ISSUED FOR APPROVAL			
-	ISSUED FOR APPROVAL	11.06.19	GM	SP

SDS Water Infrastructure Systems
Clearwater House
Castlemills
Biddisham
Somerset
BS26 2RE
+44 (0)1934 751303
sdslimited.com

Project: LAND SOUTH OF BURNDELL ROAD, YAPTON

Client: ODYSSEY

Title: ATTENUATION TANK 2 DETAIL

Scale: NTS | Date: 11.06.19

Drawing No: E133119_02_B | Rev: B

REFERENCE DRAWINGS:

Drawing Number	Revision	Drawing Title	Date
18-070/103	H	PRELIMINARY ENGINEERING LAYOUT	25.06.19

ARUN DISTRICT COUNCIL Y/98/18/RES