REVISIONS				
REV.	DESCRIPTION	DRAWN	CHKD.	DATE
A	Fence details revised to Planning comments.	ML	**	05|08|19

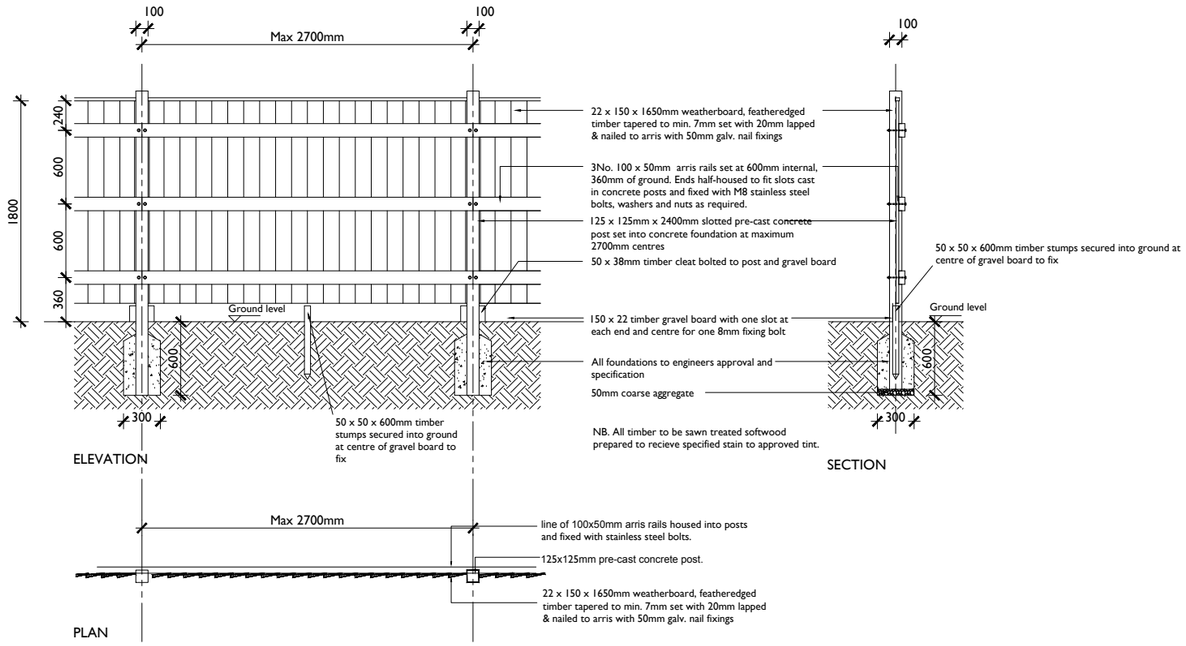

Typical Close Boarded Fence - 1800mm high

Note : Area of fencing within a demountable area plots 16-18

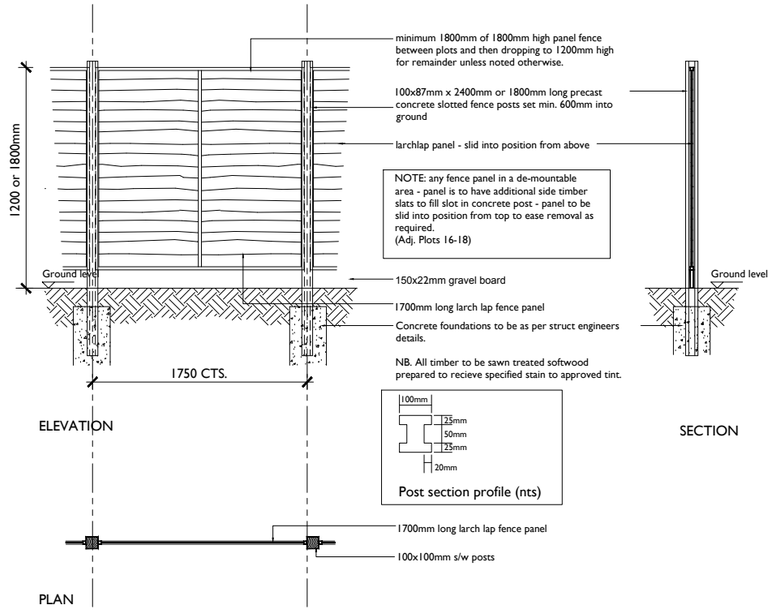

Typical Larch Lap Panel Fence - 1200mm or 1800mm high set into concrete posts

Note : Area of fencing within a demountable area plots 16-18

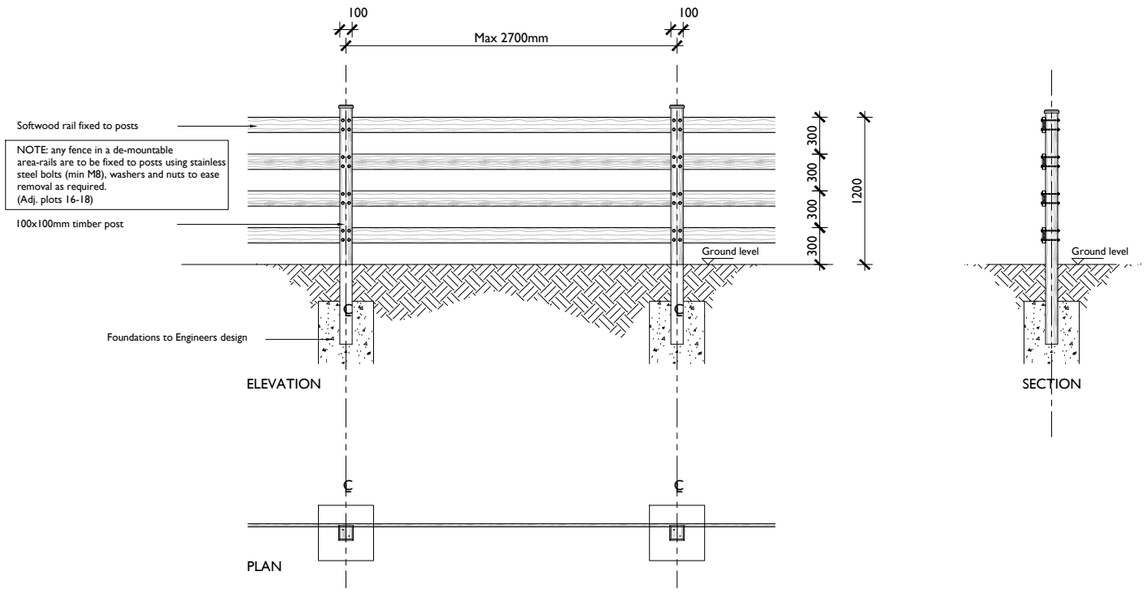

Typical Post & Rail Fence - 1200mm high

Note : Area of fencing within a demountable area plots 16-18

0 1 2 3 4 5m

Scale 1:50 at A3

PROJECT	DRAWING TITLE
Land off Burndell Road Yapton, West Sussex, BN19 0JF Bovis Homes	Demountable Fence Details Rear & Side Boundary Situations Plots 16-18

SCALE	SHEET SIZE	SHEET No.	DRAWN	CHKD	DATE	CAD FILE
1:50	A3	1 of 1			05/08/2019	

Reserved Matters

The Studio, Unit 17, Vicarage Farm, Winchester Road,
Fairoak, Hampshire. SO50 7HD
023 8069 7010
enquiries@urbanpulsedesign.co.uk www.urbanpulsedesign.co.uk

urban pulse design

18-1065-084-A

THIS DRAWING IS THE COPYRIGHT OF URBAN PULSE DESIGN LTD AND MAY NOT BE COPIED, ALTERED OR REPRODUCED IN ANY FORM, OR PASSED TO A THIRD PARTY WITHOUT THE WRITTEN CONSENT. DIMENSIONS SHOULD BE CHECKED AND VERIFIED ON SITE AND ANY DISCREPANCIES SHOULD BE REPORTED TO THE ARCHITECT. DO NOT SCALE FROM THIS DRAWING, EXCEPT FOR PLANNING PURPOSES. USE FIGURED DIMENSIONS ONLY. IF IN DOUBT ASK FOR CONFIRMATION.

ARUN DISTRICT COUNCIL Y/98/18/RES