CARLOW CONCRETE

DRAWING TITLE: BURNDELL ROAD, YAPTON
1.6m Dp. MODULAR WATER RETAINING TANK 3
PROPOSAL DRAWING

Drawn By: J. LENNON	**Rev.**	**Date.**	**Comments.**
Chkd By: BB	A	12-07-19	Overburden to resist floatation revised
Date: 06-06-2019	B	15-07-19	Minimum overburden revised
Drg No.: STS2477			

KEY TO PRECAST WALL TYPES

TYPE	DESCRIPTION	QUANTITY	HEIGHT	WIDTH	WEIGHT
E1	STANDARD EXTERNAL WALL	15	2.075m	2.100m	2.38T
E2	CORNER WALL	2	2.075m	2.607m	2.95T
E3	CORNER WALL	1	2.075m	1.863m	2.11T
E4	CORNER WALL	2	2.075m	2.124m	2.40T
E5	CORNER WALL	1	2.075m	2.827m	3.20T
IN1	STANDARD INTERNAL WALL	11	1.6m	2.20m	1.50T
D1	PRECAST DRY FLOW CHANNEL	7	N/A	2.50m	0.43T

ESTIMATED INSITU CONCRETE VOLUMES

INSITU CONCRETE BLINDING	14.9m³
BASE SLAB	34.0m³
ROOF SCREED	19.7m³
INSITU WALL JOINTS	3.2m³

ESTIMATED VOLUMES INCLUDE A 5% ALLOWANCE FOR SITE DEVIATION

KEY TO PRECAST SLABS

DESCRIPTION	QUANTITY	HEIGHT	TOTAL AREA
PRECAST WIDE SLAB	19	0.125m	150.2m2

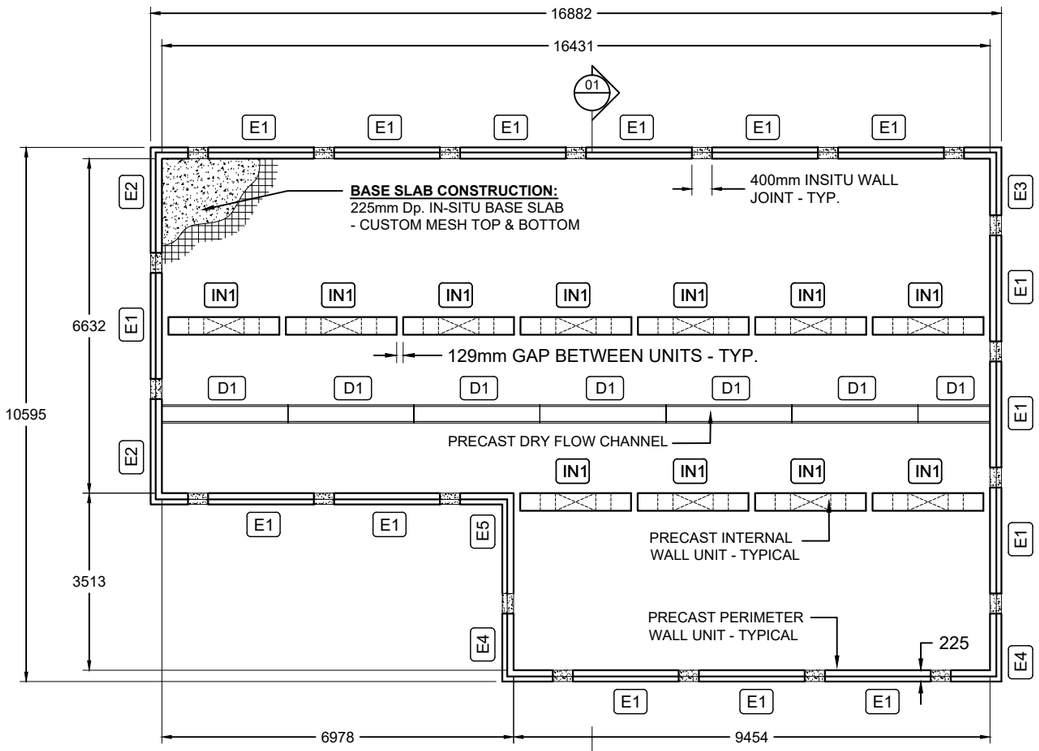

BASE PLAN - 1.6m DEEP MODULAR TANK:

ESTIMATED STORAGE VOLUME: 216m³

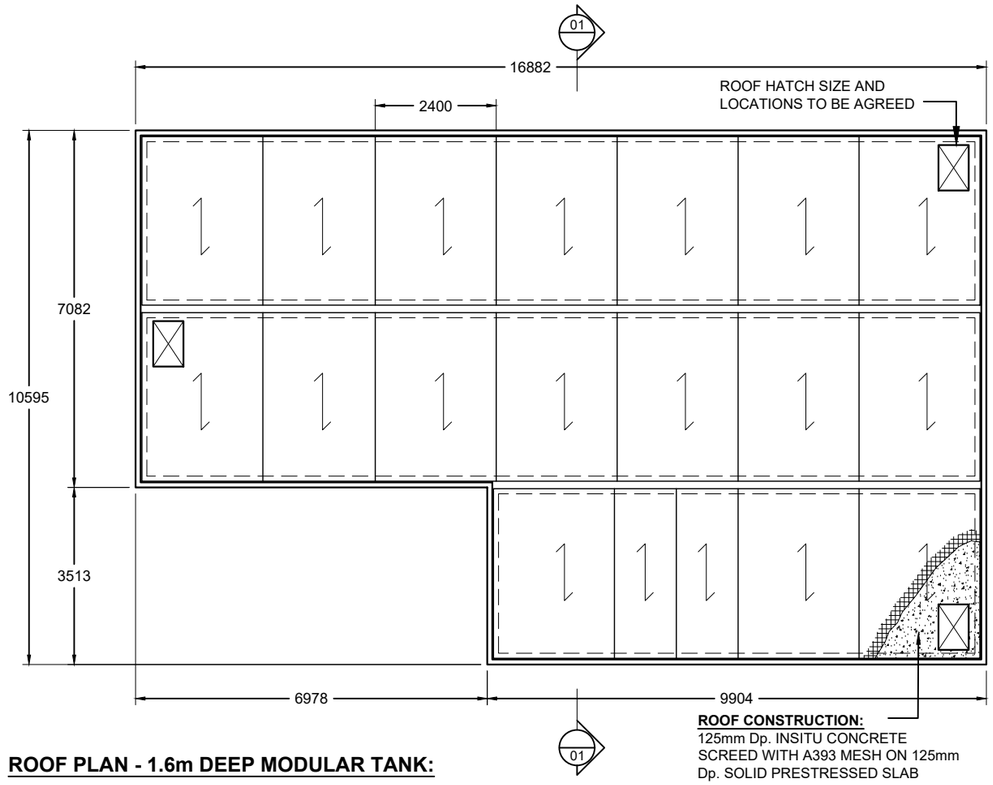

ROOF PLAN - 1.6m DEEP MODULAR TANK:

A3

ARUN DISTRICT COUNCIL Y/98/18/RES

CARLOW CONCRETE

DRAWING TITLE: BURNDELL ROAD, YAPTON
1.6m Dp. MODULAR WATER RETAINING TANK 3
PROPOSAL DRAWING

Drawn By: J. LENNON	**Rev.**	**Date.**	**Comments.**
Chkd By: BB	A	12-07-19	Overburden to resist floatation revised
Date: 06-06-2019	B	15-07-19	Minimum overburden revised
Drg No.: STS2477			

A3

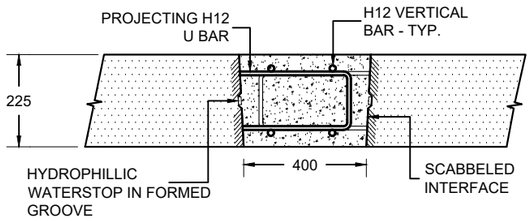

PLAN VIEW - TYPICAL WALL JOINT DETAIL:
SCALE: 1:20

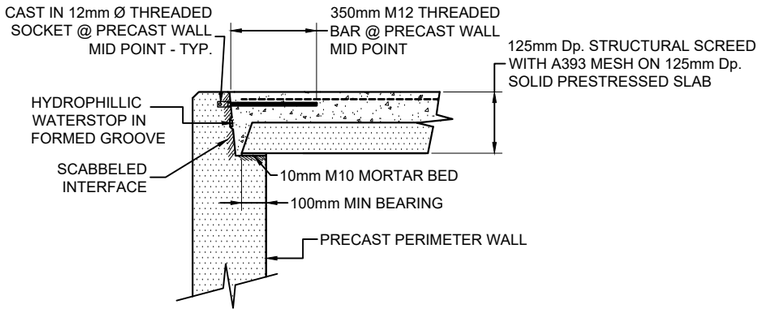

PERIMETER WALL DETAIL TOP OF WALL LEVEL:
SCALE: 1:25

SIMILAR INSTALLATION:

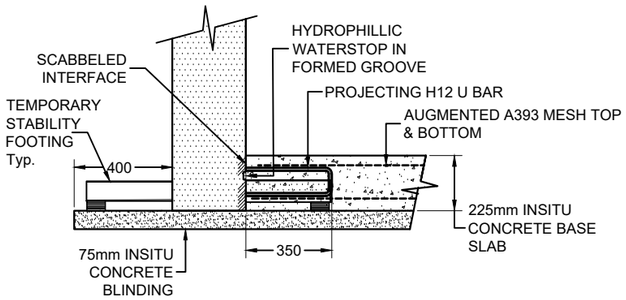

PERIMETER WALL DETAIL BASE LEVEL:
SCALE: 1:25

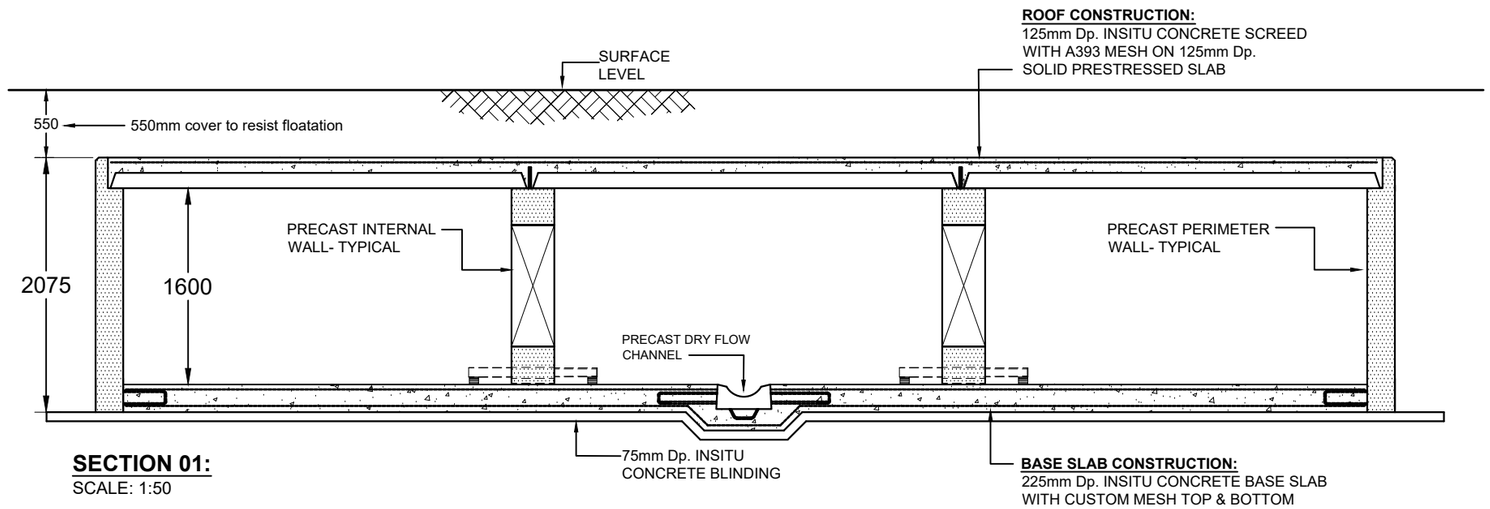

SECTION 01:
SCALE: 1:50

ARUN DISTRICT COUNCIL Y/98/18/RES