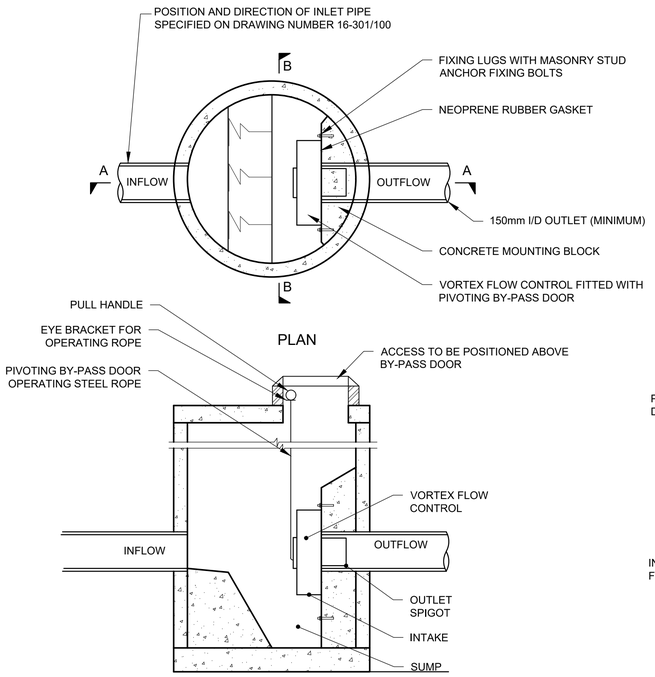

SECTION A - A

HYDRO-BRAKE TECHNICAL SPECIFICATION

MH REF	UNIT REF	FLOW (L/S)
S13	MD-SHE-0106-7000-2250-7000	7.0
S42	MD-SHE-0099-5000-1450-5000	5.0

UNIT REFERENCES TO BE CONFIRMED

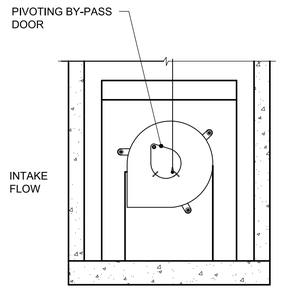

SECTION B - B

TYPICAL HYDRO-BRAKE FLOW CONTROL CHAMBER DETAIL

(FOR CHAMBER TYPE REFER TO SCHEDULES)

CHAMBERS TO BE INSTALLED AS PER MANUFACTURERS RECOMMENDATIONS

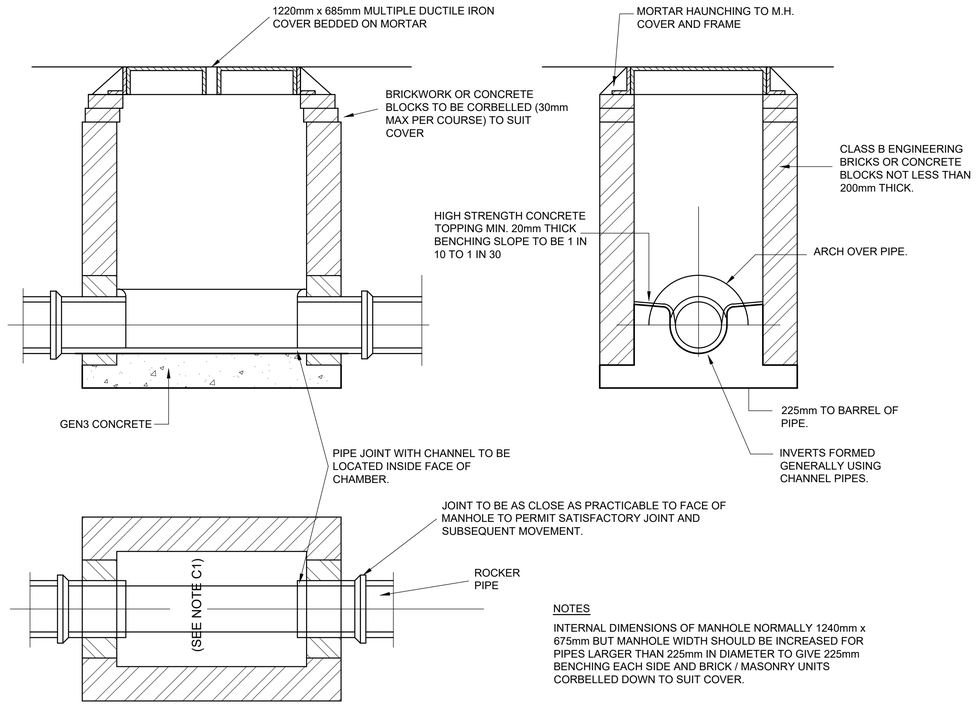

NOTES

INTERNAL DIMENSIONS OF MANHOLE NORMALLY 1240mm x 675mm BUT MANHOLE WIDTH SHOULD BE INCREASED FOR PIPES LARGER THAN 225mm IN DIAMETER TO GIVE 225mm BENCHING EACH SIDE AND BRICK / MASONRY UNITS CORBELLED DOWN TO SUIT COVER.

TYPICAL MANHOLE DETAIL - TYPE C

DEPTH FROM COVER LEVEL TO SOFFIT OF PIPE 1m TO 1.45m

NOTES

1. THIS DRAWING IS TO BE READ IN CONJUNCTION WITH THE MANUAL FOR CONTRACT DOCUMENTS, VOLUME 1, SPECIFICATION FOR HIGHWAY WORKS, WSCC SPECIFICATION AND ALL OTHER RELATED DRAWINGS ISSUED.
2. IF THERE IS ANY AMBIGUITY BETWEEN THE SPECIFICATION AND THE DRAWINGS, THE CONTRACTOR SHALL IMMEDIATELY INFORM THE ENGINEER.
3. DO NOT SCALE FROM THIS DRAWING. WORK FROM FIGURED DIMENSIONS ONLY.
4. ALL DIMENSIONS SHOWN ON THIS DRAWING ARE IN METRES
5. ALL DIMENSIONS, LEVELS AND SURVEY GRID CO-ORDINATES ARE TO BE CHECKED ON SITE AND THE ENGINEER NOTIFIED IMMEDIATELY OF ANY DISCREPANCIES PRIOR TO THE COMMENCEMENT OF THE WORKS.
6. NO DEVIATION FROM THE DETAILS SHOWN ON THIS DRAWING IS PERMITTED WITHOUT PERMISSION FROM THE ENGINEER.

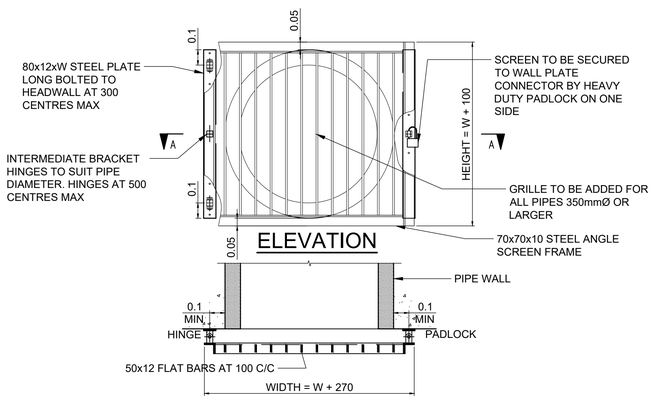

ELEVATION

SECTION A-A

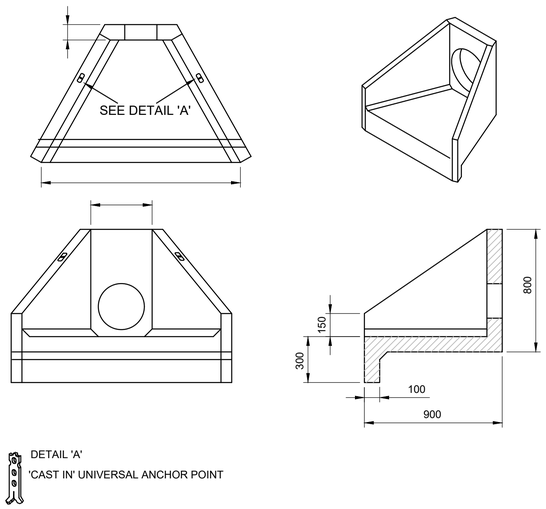

DETAIL 'A'

'CAST IN' UNIVERSAL ANCHOR POINT

ALTHON H3C HEADWALL INSTALLATION

UNITS SHOULD BE BEDDED ON MINIMUM 100mm OF SEMI-DRY CONCRETE.

SIT THE HEADWALL LEVEL OR WITH A SLIGHT FALL 1:50 FROM PIPE TO SPILL MOUTH.

FOR FULL DETAILED INSTALLATION INSTRUCTIONS CONTACT ALTHON LTD

MATERIAL: REINFORCED CONCRETE

WEIGHT APPROXIMATELY 540KG

ALL DIMENSIONS IN MM

ALTHON H3C PRECAST HEADWALL

(OR SIMILAR APPROVED)

FOR PLANNING PURPOSES ONLY

Rev	Amendments	Drn	Chk	App	Date
C	HYDRO-BRAKE REFERENCES UPDATED	SG	LH	LH	19.08.19
B	HYDRO-BRAKE REFERENCES UPDATED	JA	SG	RM	14.08.19
A	HYDRO-BRAKE REFERENCES UPDATED	SG	LH	LH	25.06.19

ODYSSEY
Tuscany House
White Hart Lane
Basingstoke
Hampshire RG21 4AF
Telephone: 01256 331144
Fax: 01256 331134
E: info@odysseyconsult.co.uk
W: www.odysseyconsult.co.uk

Job Title
LAND SOUTH OF BURNDELL ROAD, YAPTON

Drawing Title
ADOPTABLE DRAINAGE CONSTRUCTION DETAILS 2 OF 2

Client
BOVIS HOMES

Scale	Date	Designed
NTS @ A1	APR 19	SG
Drawn	Checked	Approved
TSB	SG	LH
Job No	Drawing No	Rev
18-070	18-070/109	C

P:\18-070 - Burndell Road, Yapton - Detailed Design\TechAcad\Drawings\100 Series Planning Pack\18-070-109 Adoptable Drainage Construction Details Sheet 2 of 2.dwg

ARUN DISTRICT COUNCIL Y/91/18/DOC