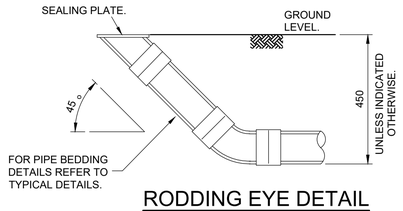

RODDING EYE DETAIL

TO BE USED IN PEDESTRAIN AND LANDSCAPED AREAS NOT SUBJECT TO VEHICULAR LOADING. MAXIMUM DEPTH TO INVERT 600mm.

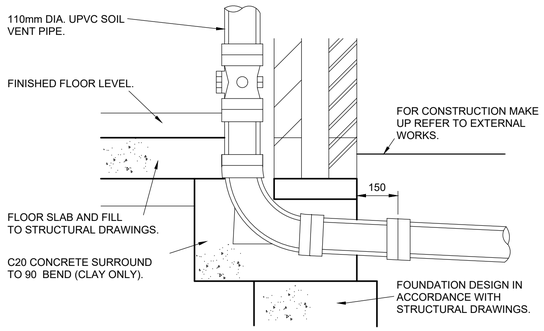

SOIL VENT PIPE CONNECTION

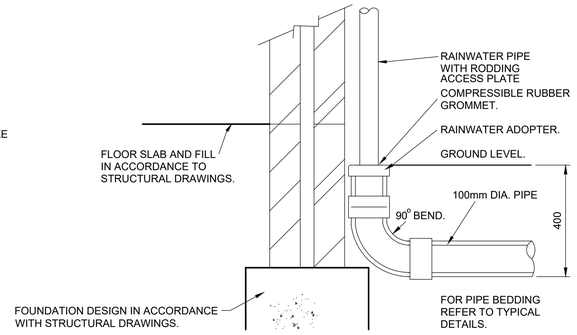

RAINWATER PIPE CONNECTION

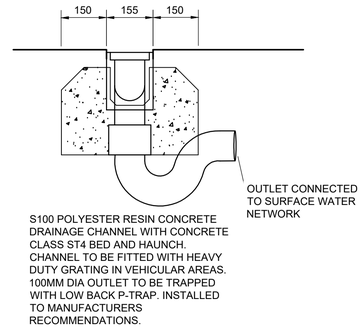

TYPICAL ACO DETAIL

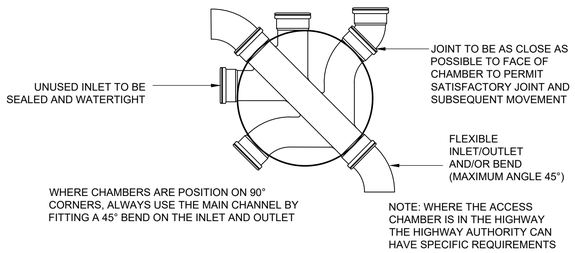

TYPICAL INSPECTION CHAMBER BASE LAYOUT - TYPE 3

(FLEXIBLE MATERIAL DETAIL)

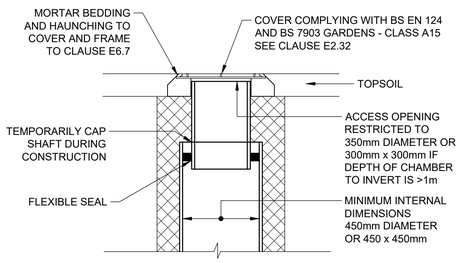

SITED IN PRIVATE GARDENS

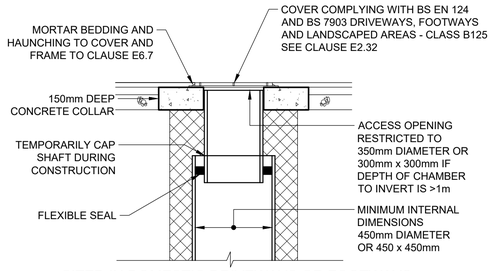

SITED IN DOMESTIC DRIVEWAYS OR FOOTWAYS

PLASTIC CHAMBERS AND RINGS SHALL COMPLY WITH BS EN 13598-1 AND BS EN 13598-2 OR HAVE EQUIVALENT INDEPENDENT APPROVAL

ALTERNATIVE TOP DETAILS FOR DOMESTIC DRIVEWAYS/ FOOTWAYS/LANDSCAPED AREAS - TYPE 3

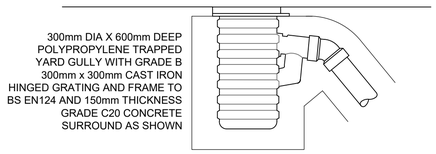

ULTRA-RIB YARD GULLY

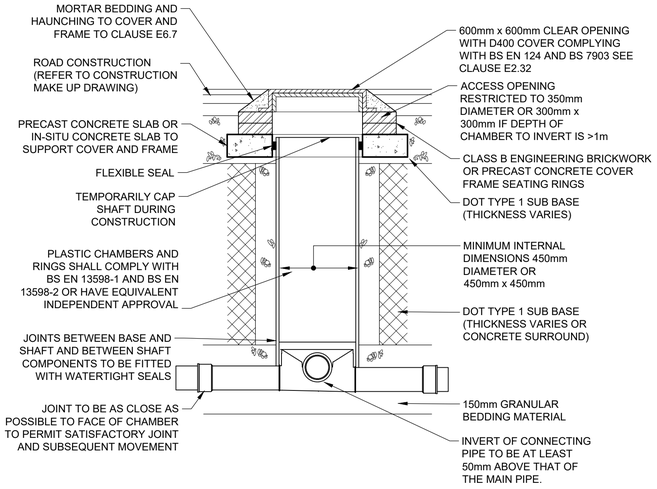

TYPICAL INSPECTION CHAMBER DETAIL - TYPE 3

(FLEXIBLE MATERIAL DETAIL) MAXIMUM DEPTH FROM COVER LEVEL TO SOFFIT OF PIPE IN AREAS SUBJECT TO VEHICLE LOADING 3m, NON-ENTRY

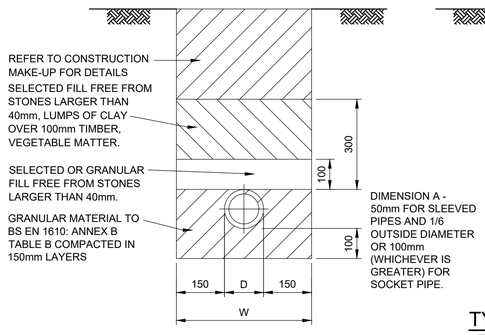

TYPICAL PIPE BEDDING DETAIL: TYPE 3 (UPVC PIPES)

LOCATION: PEDESTRIAN AREAS: 0.6 m - 8.0 m DEEP.
VEHICLE AREAS: 1.2 m - 8.0 m DEEP.

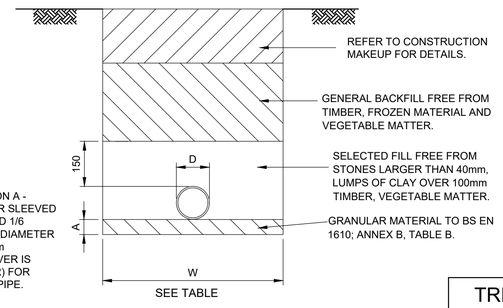

TYPICAL PIPE BEDDING DETAIL: TYPE 1 (CLAY PIPES) CLASS F

LOCATION: PEDESTRIAN AREAS UP TO 8.0 m DEEP.
VEHICLE AREAS: 1.2 m - 8.0 m (100mm DIA. PIPE).
1.2 m - 8 m (150mm DIA. PIPE).

TRENCH WIDTHS FOR VARIOUS SIZE PIPES

D	100	150	225	300	375
W	450	600	750	750	900

NOTES

1. THIS DRAWING IS TO BE READ IN CONJUNCTION WITH THE MANUAL FOR CONTRACT DOCUMENTS, VOLUME 1, SPECIFICATION FOR HIGHWAY WORKS, WSCC SPECIFICATION AND ALL OTHER RELATED DRAWINGS ISSUED.
2. IF THERE IS ANY AMBIGUITY BETWEEN THE SPECIFICATION AND THE DRAWINGS, THE CONTRACTOR SHALL IMMEDIATELY INFORM THE ENGINEER.
3. DO NOT SCALE FROM THIS DRAWING. WORK FROM FIGURED DIMENSIONS ONLY.
4. ALL DIMENSIONS SHOWN ON THIS DRAWING ARE IN METRES
5. ALL DIMENSIONS, LEVELS AND SURVEY GRID CO-ORDINATES ARE TO BE CHECKED ON SITE AND THE ENGINEER NOTIFIED IMMEDIATELY OF ANY DISCREPANCIES PRIOR TO THE COMMENCEMENT OF THE WORKS.
6. NO DEVIATION FROM THE DETAILS SHOWN ON THIS DRAWING IS PERMITTED WITHOUT PERMISSION FROM THE ENGINEER.

FOR PLANNING PURPOSES ONLY

Rev	Amendments	Drn	Chk	App	Date
C	DETAILS REMOVED AND ADDED TO SHEET 2	JA	SG	LH	25.06.19
B	ORIFICE CHAMBER AND DIFFUSER UNIT DETAIL UPDATED	SOM	SG	LH	25.06.19
A	ORIFICE CHAMBER AND DIFFUSER UNIT DETAIL ADDED TO SHOW CONNECTION	JA	SG	LH	16.05.19

ODYSSEY
Tuscany House
White Hart Lane
Basingstoke
Hampshire RG21 4AF
Telephone: 01256 331144
Fax: 01256 331134
E: info@odysseyconsult.co.uk
W: www.odysseyconsult.co.uk

Job Title
LAND SOUTH OF BURNDELL ROAD, YAPTON

Drawing Title
PRIVATE DRAINAGE CONSTRUCTION DETAILS SHEET 1 OF 2

Client
BOVIS HOMES

Scale	Date	Designed
NTS @ A1	APR 19	SG
Drawn	Checked	Approved
TSB	SG	LH
Job No	Drawing No	Rev
18-070	18-070/110	C

P:\18-070 - Burndell Road, Yapton - Detailed Design\Tech\Acad\Drawings\100 Series Planning Pack\18-070-110 Private Drainage Construction Details Sheet 1 of 2.dwg
ARUN DISTRICT COUNCIL V9/15/BOOC