Arboricultural Method Statement

Land at North End Road
Yapton
West Sussex

2nd November 2020

PJC ref: 5593/20-02 Rev 01

ARUN DISTRICT COUNCIL Y/72/20/RES

This report has been prepared by

PJC Consultancy Ltd

on behalf of

Dandara Ltd

Prepared by	**Peter Davies FdSc Arboriculture M.Arbor.A** Peter has a Foundation Degree in Arboriculture from the University of Brighton and is a professional member of the Arboricultural Association. He has over ten years experience in the arboricultural industry, originally working as a groundsman and feller, and progressing into consultancy. He is a Lantra accredited professional tree inspector.
Checked by	**Luke White FdSc Arboriculture M.Arbor.A** Luke is an arboriculturist with over six years experience working within the arboricultural and forestry industry with the latter four years working within consultancy. He gained a foundation degree in arboriculture with distinction from the University of Brighton in 2012 and is a professional member of the Arboricultural Association.

Sussex office:
Rocks Yard, Victoria Road,
Herstmonceux, Hailsham,
East Sussex, BN27 4TQ
Tel: 01323 832120

E: contact@pjcconsultancy.com

Kent office:
Unit 1, Hanover Mill,
Mersham, Ashford,
Kent, TN25 6NU
Tel: 01233 225365

W: www.pjcconsultancy.com

PJC Consultancy
Arboricultural, Ecological & Landscape Consultancy

PJC Consultancy
Arboricultural, Ecological & Landscape Consultancy

CONTENTS

1 Introduction

2 Arboricultural method statement

Appendices:

1. Tree Protection Plan
2. Tree Protection Fencing Specification
3. Example Protective Fencing Sign

ARUN DISTRICT COUNCIL Y/72/20/RES

1 INTRODUCTION

1.1 This method statement is written in conjunction with arboricultural survey ref. PJC/5401/19-01 and arboricultural impact assessment ref. PJC/5593/20-01.

1.2 Instruction: PJC Consultancy has been instructed by Dandara Ltd to provide an arboricultural method statement in accordance with BS5837: 2012 '*Trees in relation to design, demolition and construction – Recommendations*', for proposed construction works at land adjacent to North End Road in Yapton.

1.3 Objective of this report: In order to safeguard retained trees on site during development works it is necessary to implement a tree protection strategy. The objective of the following arboricultural method statement is to provide protection methodology for retained trees throughout the construction period, including the above ground and below ground parts of the trees as well as their rooting medium. This report is concerned with the protection of all retained trees at the site including trees around the curtilage with the potential to be impacted by the construction works.

1.4 Limitations of report: This document is based on the plans and information made available to the author on the date of the report. Updates to the arboricultural method statement and Tree Protection Plan may be required following detailed design stage of development including the routing of non-drainage services and the provision of a construction management plan.

1.5 Contents of report: This report includes the following:

- Arboricultural Method Statement
- Tree Protection Plan

ARUN DISTRICT COUNCIL Y/72/20/RES

2 ARBORICULTURAL METHOD STATEMENT

2.1 General requirements: The arboricultural method statement and Tree Protection Plan shall remain on site for the duration of construction and landscaping works and be available to site operatives at all times. All operatives at the site shall be briefed about tree related factors as part of their site induction.

2.2 Any variation from the methodology described in this method statement shall be discussed with the supervising arboriculturist and agreed with the local authority arboricultural officer.

2.3 Phasing of works: To ensure trees are protected throughout the development, the proposed development shall occur in the following order:

Table 1: Phasing of works

Works Order	Operation	Notes
1	Initial tree works.	The tree works contractor shall undertake the tree removals and access facilitation pruning specified in the arboricultural impact assessment. Completion of these works will be required to enable the installation of tree protection barriers.
2	Installation of tree protection barriers.	Tree protection fencing shall be installed in the locations shown on the Tree Protection Plan and to the specification described in this method statement.
3	Pre-commencement meeting.	The project arboriculturist shall attend a site meeting with the site manager. The local authority arboricultural officer shall be notified so they may also attend. The above pre-start arboricultural works shall be signed off by the project arboriculturist during the meeting. The meeting shall occur before any plant activity, ground works or construction activities begin.
4	Construction phase.	The tree protection barriers shall be maintained, and the construction exclusion zones observed throughout the construction phase. Construction and hard landscaping works within root protection areas shall occur sensitively as described in this method statement.
6	Soft landscaping phase.	The tree protection barriers shall be dismantled when external construction and hard landscape operations have been completed and plant machinery or excess construction materials have been removed from site. Soft landscape operations shall occur sensitively as described in this method statement.

2.4 Initial tree works: The tree removals and access facilitation pruning specified in the arboricultural impact assessment shall be carried out as the first stage of development. Any requirements for access facilitation pruning which have not been anticipated on the date of this report shall be discussed at the pre-commencement meeting with the project arboriculturist and be communicated to the local authority arboricultural officer.

ARUN DISTRICT COUNCIL Y/72/20/RES

2.5 Tree stumps and vegetation located within the root protection areas of retained trees shall be cleared with controlled hand tools (e.g. stump grinder/brush cutter). Plant machinery shall not be used to scrape vegetation, 'grub out' stumps within root protection areas, or access the site until the tree protection barriers have been installed.

2.6 If bonfires are lit to dispose of arisings from the vegetation or tree clearance works, an assessment of wind direction and strength shall be made to ensure flames cannot extend within 5m of any part of a retained tree. No bonfires shall be lit within a root protection area.

2.7 Trees should be checked for protected species before works are undertaken. It is against the law to disturb bats or their roosts under the Conservation of Habitat and Species Regulations. Nesting birds are protected by the Wildlife and Countryside Act. If protected species are discovered, Natural England should be contacted for advice.

2.8 The tree works contractors should carry out all tree works to BS3998: 2010 '*Tree works – recommendations*' as modified by research that is more recent. They should also carry relevant, adequate and up to date insurance.

2.9 It is suggested that an Arboricultural Association approved contractor carry out all tree works. Approved contractors are expected to work to industry best standards. The Arboricultural Association website (www.trees.org.uk) contains contact details and information on engaging a suitable contractor.

2.10 Tree protection barriers: The root protection areas of retained trees must be left free from disturbance and protected from contamination or compaction during the proposed works. Protection shall comprise the formation of construction exclusion zones through the installation of tree protection fencing.

2.11 Tree protection fencing shall be installed in the locations shown on the Tree Protection Plan. The specification for tree protection fencing shall be metal welded mesh panels (e.g. Heras panels), in concrete or rubber feet. The panels shall be supported by metal stabiliser struts mounted on either a base plate secured by ground pins, or in a block tray (refer to Appendix 2). Any variation from this specification for tree protection fencing shall be discussed with the project arboriculturist and agreed with the local authority arboricultural officer.

2.12 Signs shall be affixed to the fencing as shown in Appendix 3 to explain its purpose. The signs shall be affixed at a reasonable size and frequency to ensure they are easily visible to operatives at the site.

2.13 The tree protection fencing shall be installed before any plant activity, ground works or construction activities commence at the site. They shall be maintained in situ until the soft landscaping phase of development when all other construction activities in the vicinity have been completed, and excess construction materials and plant machinery have been removed from site. Any damage that occurs to the tree protection barriers during the construction period must be rectified immediately, prior to other construction activities recommencing in the vicinity.

2.14 The areas protected by tree protection fencing (highlighted yellow on the Tree Protection Plan) shall be referred to as the construction exclusion zones. The following restrictions shall apply within the construction exclusion zones:

- No vehicular access shall be permitted unless on adequate temporary ground protection measures that have been agreed with the project arboriculturist.
- Regular pedestrian access shall be restricted unless on suitable ground protection measures agreed with the project arboriculturist.
- No storage of construction materials shall occur.
- No storage of building spoil or construction debris (including short-term temporary stockpiling) shall occur.
- No harmful chemicals shall be stored or handled.
- No fires shall be permitted.
- No mechanical excavation including regrading of levels shall occur.
- There shall be no change in ground level unless undertaken under the supervision of the project arboriculturist.
- No construction activities including installation of new permanent hard standing shall be undertaken unless otherwise specified in this method statement.

2.15 Storage and handling of harmful chemicals: Provision must be taken to prevent the storage and handling of harmful chemicals within the root protection areas of retained trees. Harmful chemicals include fuels, oils, bitumen, builder's sand (which has a high salt content) and cement. Provision shall also be made to prevent the storage and handling of harmful chemicals in areas proposed for further planting if the existing soil is intended to be retained.

2.16 Cement mixing shall always occur outside the construction exclusion zones. If cement mixing is to occur close to the construction exclusion zones, or there is the potential for cement washings to leech into a root protection area, adequate, bunded ground protection measures must be used. This could comprise impermeable plastic sheeting under wooden boards (to prevent tears) surrounded by a raised lip.

2.17 All other chemicals that are harmful to trees must be stowed in suitable containers and stored away from the construction exclusion zones unless adequate, bunded ground protection measures are implemented to prevent spillages leeching into root protection areas.

2.18 Contractor facilities: A suitable location for site cabins, contractor parking and site facilities for operatives shall be agreed with the project arboriculturist during the pre-commencement meeting if not already specified in a construction management plan. These facilities must be located outside the root protection areas of all retained trees unless on adequate ground protection measures that have been signed off with the project arboriculturist (potentially including existing hard standing). Provision must be taken to prevent exhaust fumes or hot air from generators or kitchen facilities from damaging foliage within the crowns of retained trees.

2.19 Excavations within root protection areas of T21 and T30: The new dwelling in plot 30 (70 unit scheme) partially encroaches the root protection area of T29 in the area hatched pink on the Tree Protection Plan. New storm cells shall also be installed within the root protection area of T21 as highlighted on the Tree Protection Plan.

ARUN DISTRICT COUNCIL Y/72/20/RES

2.20 A preliminary trench shall be hand dug around the outside edge of the excavations within each root protection area. The trench shall be excavated to the depth of the storm cells adjacent to T21 and to a depth of 600mm within the root protection area of T30. Roots revealed shall be cleanly pruned using secateurs to leave the smallest feasible wound. Small clean pruning wounds require less energy from the tree to heal and reduce the chance of infection by tree pathogens. Roots over 25mm diameter must not be pruned unless the project arboriculturist has first been consulted to assess the potential impact on the tree. Once the preliminary trench and root pruning is complete, the remainder of the excavations may be machine dug.

2.21 Constructing new hard standing within root protection areas: Within the root protection areas of T6, T10, T11, T13, T14, T18, T21, T23, T24 and T25, the new hard standing shall be constructed to the basic specification described in the arboricultural impact assessment. The detailed specification (including levels) shall be provided by an engineer but must be signed off by the project arboriculturist before implementation to ensure compliance with arboricultural requirements.

2.22 Construction of the hard-standing footpath on the western site boundary will require access into the construction exclusion zones. Only pedestrian access will be permitted into the construction exclusion zones unless temporary ground protection measures (such as a cellular confinement system) are agreed with the project arboriculturist. Tree protection fencing must be reinstated when the path is complete and maintained until the soft landscaping phase of development.

2.23 Prior to construction of the surfaces, the existing ground vegetation (e.g. grass sward or up to 50mm of leaf litter) shall be removed using controlled hand tools such as a spade or turf cutter. The underlying soil must be fully retained and protected. Plant machinery may not be used to scrape vegetation unless under the supervision of the project arboriculturist and tree stumps should be removed from root protection areas carefully using a stump grinder. If obvious surface tree roots are present or if the soil if known to be shallow, then use of plant machinery will not be appropriate.

2.24 The surfaces shall be installed by a process of 'rolling out' the cellular confinement system. This means that as one section of the cellular confinement system is installed, it will provide ground protection and create access for plant machinery to allow the next section to be installed (a tracked excavator and dumper truck are usually required to install a cellular confinement system). Vehicular access onto exposed ground within the root protection areas of retained trees shall be prohibited at all times unless adequate temporary ground protection measures are agreed with the project arboriculturist.

2.25 If access is required onto a cellular confinement system before the wearing course installed, a temporary surface (such as thick plywood or metal boards depending on the load needing support) shall be installed above a geotextile membrane to prevent soil and other building debris blocking the airspaces in the cellular confinement system, which could otherwise reduce the porosity of the completed surface.

2.26 When the cellular confinement system has been filled with clean angular stone, this should not be compacted to the point it compacts the underlying soil. Four passes with a smooth roller (max weight 1000kg without vibration) or several passes by a tracked excavator should be sufficient. Checks should be made before laying the wearing course to ensure the infill is fully consolidated.

2.27 The finished level of the no-dig surfaces will be higher than the surrounding un-surfaced ground. To mitigate this, clean-screened topsoil may be banked around the edge of the surface. It is recommended that no less than a gradient of 1:3 is created as increasing the ground level within a root protection area can disrupt root function. It is also necessary to avoid banking soil around the buttresses or buttress roots of retained trees.

2.28 Soft landscaping within root protection areas: Soft landscaping within the root protection areas of retained trees shall occur as the final phase of development, when all other construction activities in the vicinity have been completed and it is safe to dismantle the tree protection barriers. The detailed specification for soft landscaping is to be confirmed but will potentially include turfing and tree/shrub planting within root protection areas.

2.29 All planting stock, topsoil and other soft landscaping materials shall be stockpiled outside the root protection areas of retained trees. When the tree protection barriers have been dismantled, the extents of the root protection areas shall be made clear to operatives at the site by other means (e.g. ground marker paint or similar). The standard restrictions to works within the construction exclusion zones will still apply during the soft landscaping phase of development.

2.30 Where new turf or grass seed is to be laid within the root protection areas of retained trees, topsoil will likely need to be imported. The existing soil may be lightly tilled by hand but use of rotavators or plant machinery will be prohibited. A maximum increase of 100mm of topsoil may be introduced to a root protection area to avoid suffocating existing root growth. Care must be taken to prevent soil being piled against tree buttresses or buttress roots.

2.31 When soil or other materials are transported across a root protection area in wet conditions, scaffold board pathways must be used to prevent compaction of the rooting medium. It should be noted that even pedestrian traffic can compact the soil in wet conditions.

2.32 All planting pits within root protection areas shall be individually hand excavated (no trench planting). Care must be taken to avoid severing or damaging roots with a diameter greater than 25mm.

2.33 **Arboricultural supervision:** Arboricultural supervision will be required for the following stages of development:

- Prior to commencement of works, the project arboriculturist shall review and where necessary provide input into the construction management plan. Where necessary, this arboricultural method statement and tree protection plan shall be updated to accommodate the construction management plan.
- Prior to implementation, the project arboriculturist shall sign off that the engineers specification for the new surfaces to be installed within root protection areas complies with principal design specified in the arboricultural impact assessment.
- A pre-commencement meeting shall be held between the contractors and the project arboriculturist. The local authority arboricultural officer shall be given reasonable notice of the pre-commencement meeting so they may also attend. The purpose of the pre-commencement meeting shall be:

    1. To clarify the tree protection methodology with the site manager.
    2. To sign off that the pre-commencement tree works have been completed as specified in the arboricultural impact assessment, and to agree any requirements for access facilitation pruning which have not been anticipated prior to the meeting.
    3. To sign off that the tree protection barriers have been installed in the correct locations and to the agreed specification.

- The project arboriculturist shall sign off that the prescribed methodology is followed for installing storm cells within the root protection area for T21.
- The project arboriculturist shall sign off that the prescribed methodology is followed for excavating the building footing adjacent to T29.
- The site manager shall provide a monthly update to the project arboriculturist including photographic evidence that the tree protection barriers are intact and that the construction exclusion zones have been observed.

2.34 If significant root growth is disturbed during construction activities that are not within the scope of this report, the work shall cease until the project arboriculturist has been consulted. Roots greater than 25mm in diameter or dense/matted fibrous roots shall be considered significant root growth. It should be remembered that whilst root protection areas are part of industry best practice, tree root growth is influenced by a number of factors and may not conform to expected ideals.

2.35 If at any time during the construction process, damage is inadvertently caused to a tree, the project arboriculturist shall be notified to assess the likely implications and to prescribe potential remedial measures to be implemented. Damage can be in the form of chemical or fuel spillage, mechanical damage to either the above ground parts of the tree or the roots, fire or any other unforeseen circumstance.

2.36 The supervising arboriculturist shall be appointed by the contractor. It will be necessary for the arboriculturist to report to the local planning authority on the outcome of the site visits as well as any unforeseen tree related issues.

PJC Consultancy
Arboricultural, Ecological & Landscape Consultancy

Contact details

Sussex office:
Rocks Yard
Victoria Road
Herstmonceux
Hailsham
East Sussex
BN27 4TQ

Tel: 01323 832120

Author: Peter Davies

Date: 2nd November 2020

E-mail: pete@pjcconsultancy.com

PJC Consultancy
Arboricultural, Ecological & Landscape Consultancy

APPENDIX 1

Tree Protection Plan

ARUN DISTRICT COUNCIL Y/72/20/RES

Key:

- Root protection area for tree to be retained
- Canopy of tree to be retained
- Tree protection fencing
- Construction exclusion zone
- No-dig surfacing within root protection area
- Excavation required within root protection area

Appendix 2, (Tree Survey Schedule) contained within the arboricultural report ref. PJC/5593/20-01 contains further information for each tree.

This drawing should be viewed in colour.

Tree numbers suffixed with PA indicate the tree position is approximate.

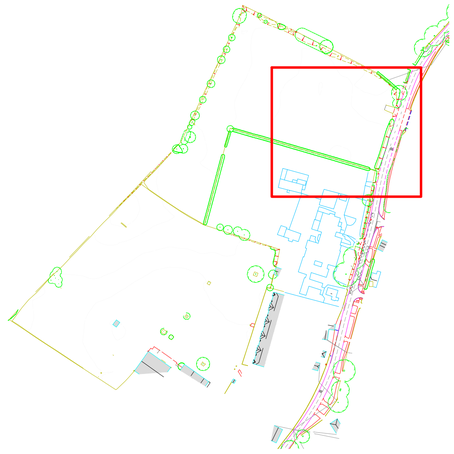

Drawing no: PJC/5593/20/C **Rev:** 01 **Sheet number:** 1 of 6

Client and site:
Dandara

Land at North End Road
Yapton
West Sussex

Drawing title: Tree Protection Plan

Date drawn: 02/11/2020

Scale: 1:200 at A1

Drawn by: PD **Checked by:** LW

PJC Consultancy
Arboricultural, Ecological & Landscape Consultancy

PJC Consultancy
Rocks Yard, Victoria Road, Herstmonceux,
Hailsham, East Sussex, BN27 4TQ.

t: 01323 832120
e: contact@pjcconsultancy.com
w: www.pjcconsultancy.com

ARUN DISTRICT COUNCIL COPIES

Scale (m)
0 1 2 3 4 5 6 7 8 9 10 15 20

Key:

- Root protection area for tree to be retained
- Canopy of tree to be retained
- Tree protection fencing
- Construction exclusion zone
- No-dig surfacing within root protection area
- Excavation required within root protection area

Appendix 2, (Tree Survey Schedule) contained within the arboricultural report ref. PJC/5593/20-01 contains further information for each tree.

This drawing should be viewed in colour.

Tree numbers suffixed with PA indicate the tree position is approximate.

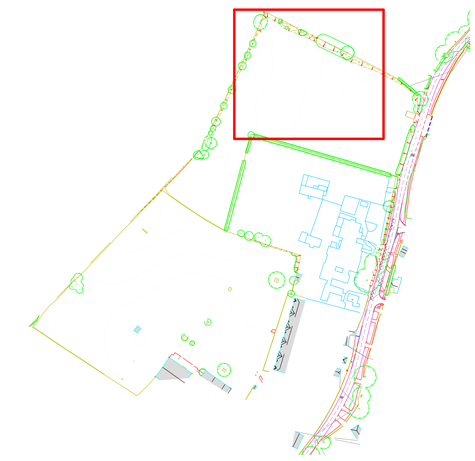

Drawing no: PJC/5593/20/C **Rev:** 01 **Sheet number:** 2 of 6

Client and site:
Dandara

Land at North End Road
Yapton
West Sussex

Drawing title: Tree Protection Plan

Date drawn: 02/11/2020

Scale: 1:200 at A1

Drawn by: PD **Checked by:** LW

PJC Consultancy
Arboricultural, Ecological & Landscape Consultancy

PJC Consultancy
Rocks Yard, Victoria Road, Herstmonceux,
Hailsham, East Sussex, BN27 4TQ.

t: 01323 832120
e: contact@pjcconsultancy.com
w: www.pjcconsultancy.com

ARUN DISTRICT COUNCIL COPIES

Scale (m)
0 1 2 3 4 5 6 7 8 9 10 15 20

Key:

- Root protection area for tree to be retained
- Canopy of tree to be retained
- Tree protection fencing
- Construction exclusion zone
- No-dig surfacing within root protection area
- Excavation required within root protection area

Appendix 2, (Tree Survey Schedule) contained within the arboricultural report ref. PJC/5593/20-01 contains further information for each tree.

This drawing should be viewed in colour.

Tree numbers suffixed with PA indicate the tree position is approximate.

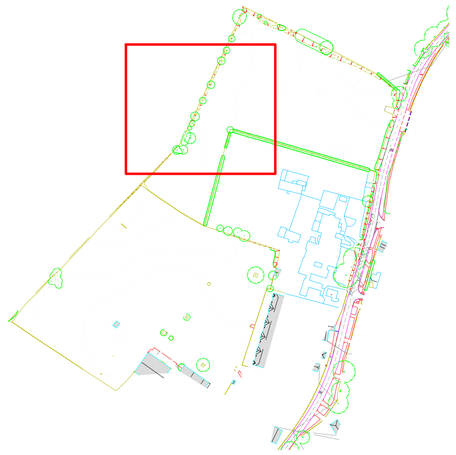

Drawing no: PJC/5593/20/C **Rev:** 01 **Sheet number:** 3 of 6

Client and site:
Dandara

Land at North End Road
Yapton
West Sussex

Drawing title: Tree Protection Plan

Date drawn: 02/11/2020

Scale: 1:200 at A1

Drawn by: PD **Checked by:** LW

PJC Consultancy
Arboricultural, Ecological & Landscape Consultancy

PJC Consultancy
Rocks Yard, Victoria Road, Herstmonceux,
Hailsham, East Sussex, BN27 4TQ.

t: 01323 832120
e: contact@pjcconsultancy.com
w: www.pjcconsultancy.com

ARUN DISTRICT COUNCIL COPIES

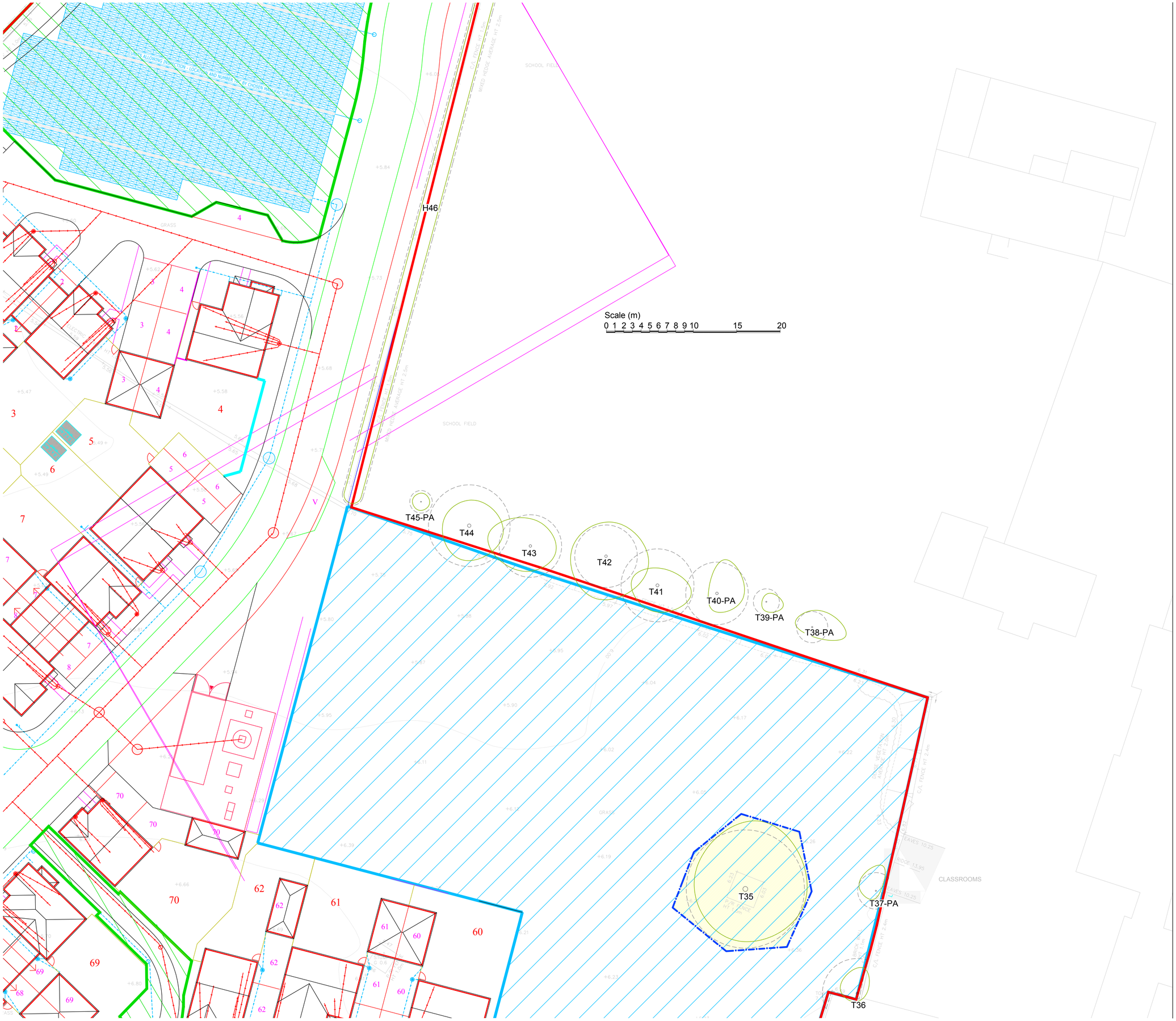

Key:

- Root protection area for tree to be retained
- Canopy of tree to be retained
- Tree protection fencing
- Construction exclusion zone
- No-dig surfacing within root protection area
- Excavation required within root protection area

Appendix 2, (Tree Survey Schedule) contained within the arboricultural report ref. PJC/5593/20-01 contains further information for each tree.

This drawing should be viewed in colour.

Tree numbers suffixed with PA indicate the tree position is approximate.

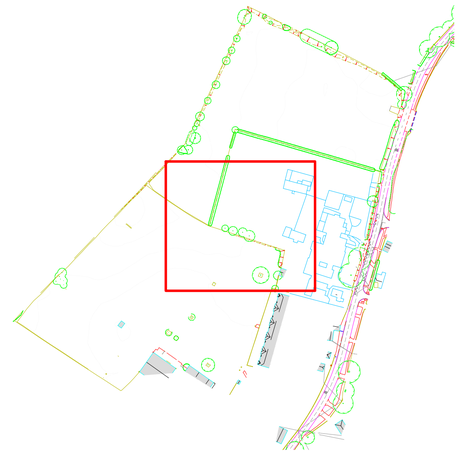

Drawing no: PJC/5593/20/C **Rev:** 01 **Sheet number:** 4 of 6

Client and site:
Dandara

Land at North End Road
Yapton
West Sussex

Drawing title: Tree Protection Plan

Date drawn: 02/11/2020

Scale: 1:200 at A1

Drawn by: PD **Checked by:** LW

PJC Consultancy
Arboricultural, Ecological & Landscape Consultancy

PJC Consultancy
Rocks Yard, Victoria Road, Herstmonceux,
Hailsham, East Sussex, BN27 4TQ.

t: 01323 832120
e: contact@pjcconsultancy.com
w: www.pjcconsultancy.com

ARUN DISTRICT COUNCIL COPIES

Key:

- Root protection area for tree to be retained
- Canopy of tree to be retained
- Tree protection fencing
- Construction exclusion zone
- No-dig surfacing within root protection area
- Excavation required within root protection area

Appendix 2, (Tree Survey Schedule) contained within the arboricultural report ref. PJC/5593/20-01 contains further information for each tree.

This drawing should be viewed in colour.

Tree numbers suffixed with PA indicate the tree position is approximate.

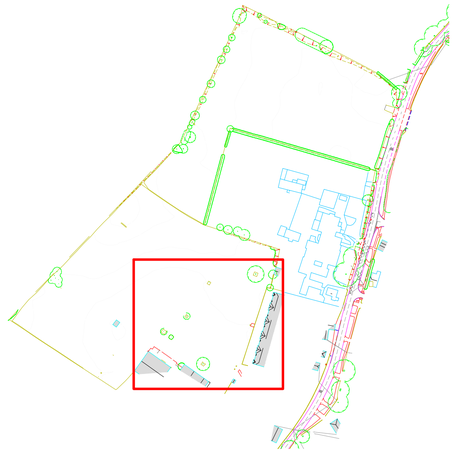

Scale (m)
0 1 2 3 4 5 6 7 8 9 10 15 20

Drawing no: PJC/5593/20/C **Rev:** 01 **Sheet number:** 5 of 6

Client and site:
Dandara

Land at North End Road
Yapton
West Sussex

Drawing title: Tree Protection Plan

Date drawn: 02/11/2020

Scale: 1:200 at A1

Drawn by: PD **Checked by:** LW

PJC Consultancy
Arboricultural, Ecological & Landscape Consultancy

PJC Consultancy
Rocks Yard, Victoria Road, Herstmonceux,
Hailsham, East Sussex, BN27 4TQ.

t: 01323 832120
e: contact@pjcconsultancy.com
w: www.pjcconsultancy.com

ARUN DISTRICT COUNCIL COPYRIGHT

Scale (m)
0 1 2 3 4 5 6 7 8 9 10 15 20

T23
T24
T25
T29-PA
H30-PA

Key:

- Root protection area for tree to be retained
- Canopy of tree to be retained
- Tree protection fencing
- Construction exclusion zone
- No-dig surfacing within root protection area
- Excavation required within root protection area

Appendix 2, (Tree Survey Schedule) contained within the arboricultural report ref. PJC/5593/20-01 contains further information for each tree.

This drawing should be viewed in colour.

Tree numbers suffixed with PA indicate the tree position is approximate.

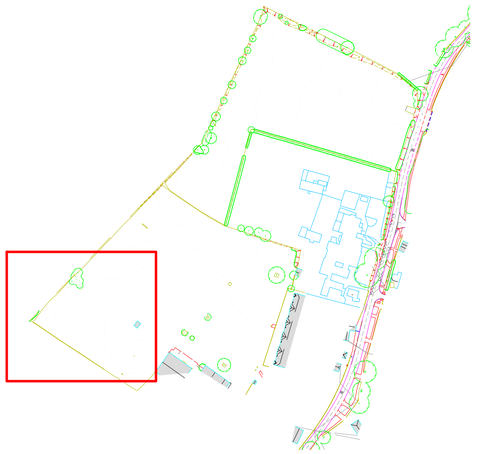

Drawing no: PJC/5593/20/C **Rev:** 01 **Sheet number:** 6 of 6

Client and site:
Dandara

Land at North End Road
Yapton
West Sussex

Drawing title: Tree Protection Plan

Date drawn: 02/11/2020

Scale: 1:200 at A1

Drawn by: PD **Checked by:** LW

PJC Consultancy
Arboricultural, Ecological & Landscape Consultancy

PJC Consultancy
Rocks Yard, Victoria Road, Herstmonceux,
Hailsham, East Sussex, BN27 4TQ.

t: 01323 832120
e: contact@pjcconsultancy.com
w: www.pjcconsultancy.com

ARUN DISTRICT COUNCIL COPYRIGHTS

APPENDIX 2

Tree Protection Fencing Specification

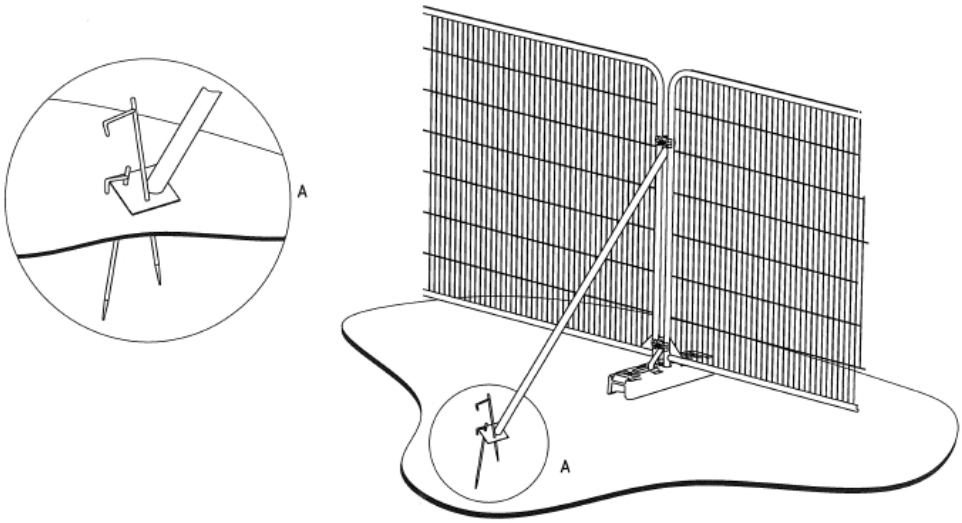

a) Stabilizer strut with base plate secured with ground pins

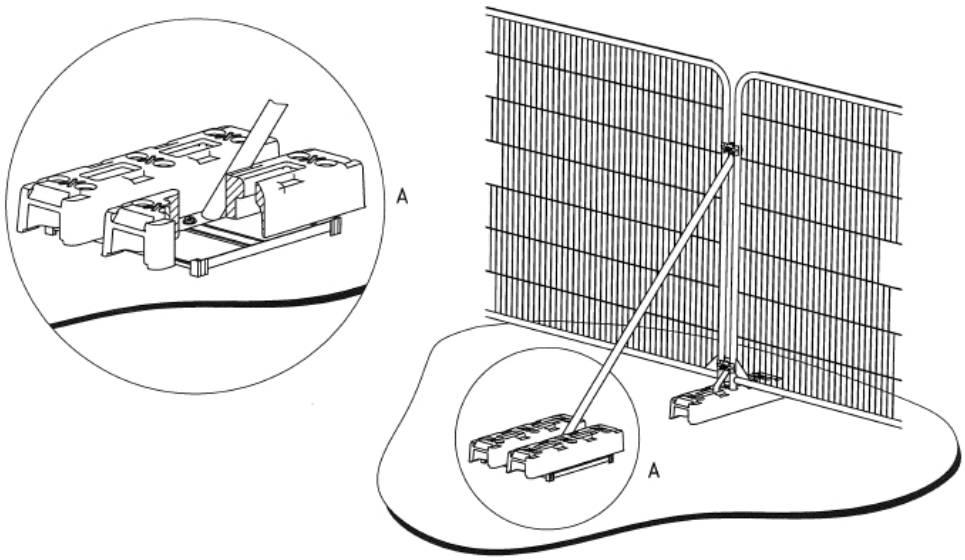

b) Stabilizer strut mounted on block tray

APPENDIX 3

Example Protective Fencing Sign