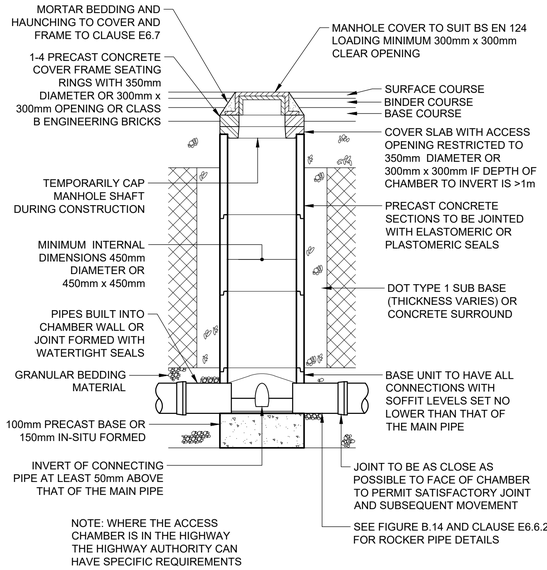

TYPICAL INSPECTION CHAMBER DETAIL - ADOPTABLE TYPE 3 DEMARCATION CHAMBER

(RIGID MATERIAL DETAIL)

MAXIMUM DEPTH FROM COVER LEVEL TO SOFFIT OF PIPE IN AREAS SUBJECT TO VEHICLE LOADING 3m, NON-ENTRY

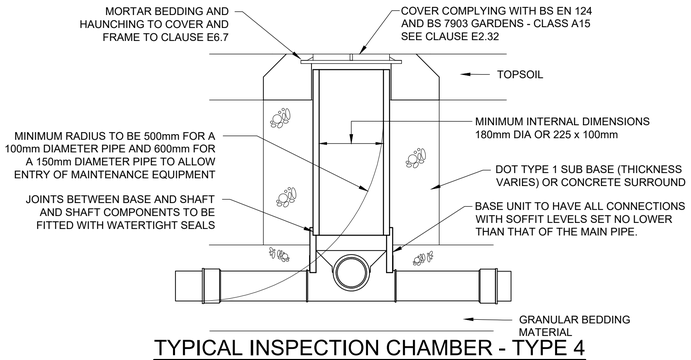

TYPICAL INSPECTION CHAMBER - TYPE 4

SITED IN DOMESTIC GARDENS

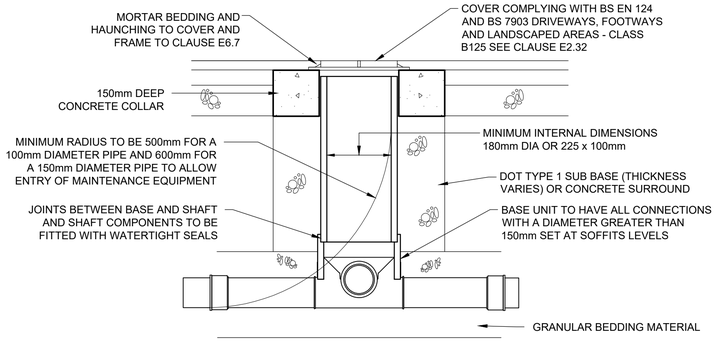

TYPICAL INSPECTION CHAMBER - TYPE 4

SITED IN DRIVEWAYS/PAVED AREAS

PLASTIC CHAMBERS AND RINGS SHALL COMPLY WITH BS EN 13598-1 AND BS EN 13598-2 OR HAVE EQUIVALENT INDEPENDENT APPROVAL

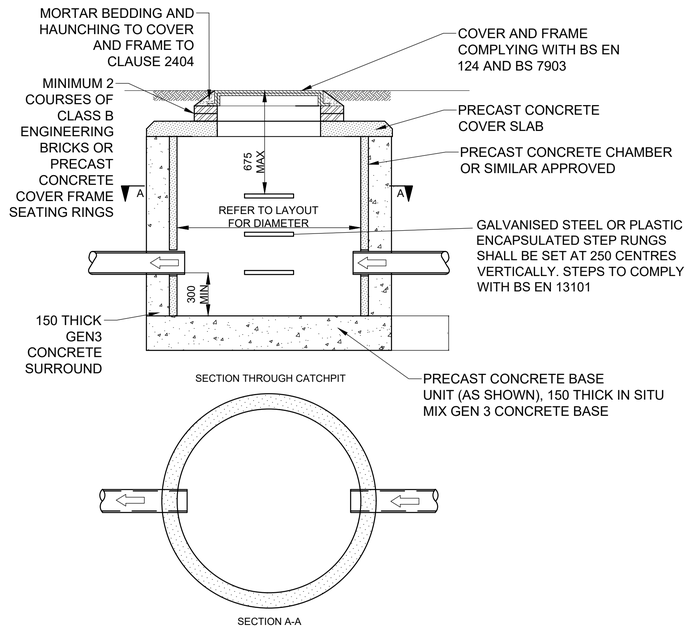

CATCHPIT DETAIL

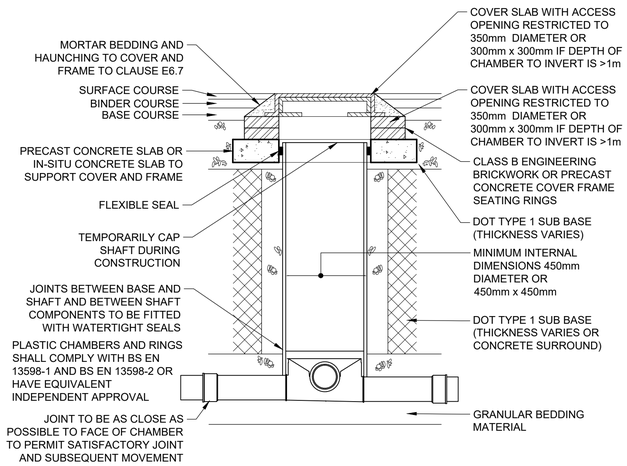

TYPICAL INSPECTION CHAMBER DETAIL - TYPE 3

(FLEXIBLE MATERIAL DETAIL) MAXIMUM DEPTH FROM COVER LEVEL TO SOFFIT OF PIPE IN AREAS SUBJECT TO VEHICLE LOADING 3m, NON-ENTRY

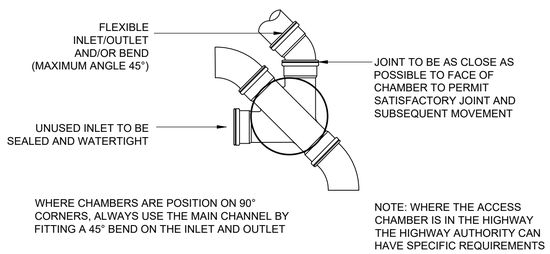

TYPICAL INSPECTION CHAMBER - TYPE 4

(FLEXIBLE MATERIAL DETAIL)

MAXIMUM DEPTH FROM COVER LEVEL TO INVERT OF PIPE 0.6m, NON-ENTRY

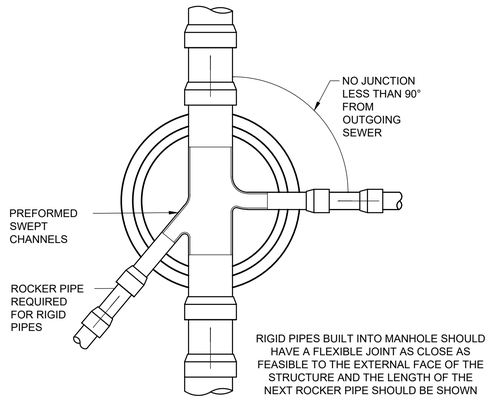

TYPICAL ARRANGEMENT OF PIPE JUNCTIONS WITHIN MANHOLES

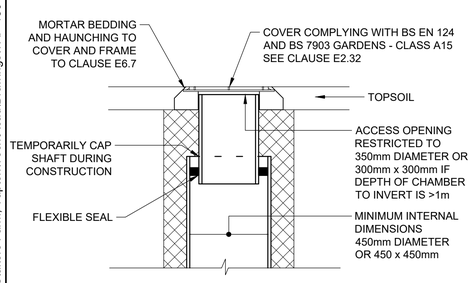

SITED IN DOMESTIC GARDENS

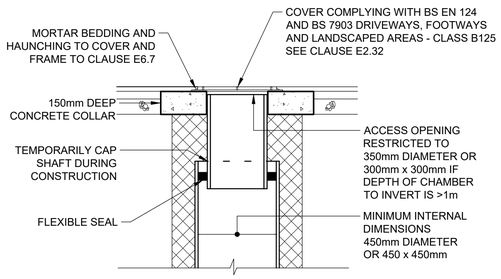

SITED IN DOMESTIC DRIVEWAYS OR FOOTWAYS

PLASTIC CHAMBERS AND RINGS SHALL COMPLY WITH BS EN 13598-1 AND BS EN 13598-2 OR HAVE EQUIVALENT INDEPENDENT APPROVAL

ALTERNATIVE TOP DETAILS FOR LIGHT VEHICLE LOADING AND LANDSCAPED AREAS - TYPE 3

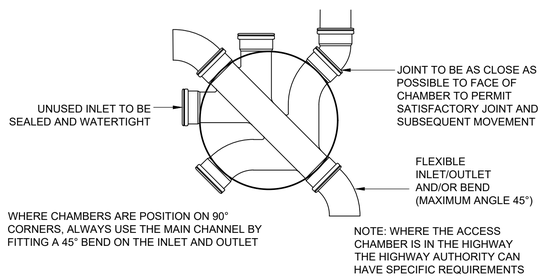

TYPICAL INSPECTION CHAMBER - TYPE 3

(FLEXIBLE MATERIAL DETAIL)

MAXIMUM DEPTH FROM COVER LEVEL TO SOFFIT OF PIPE 2m, NON-ENTRY

NOTES

1. THIS DRAWING IS TO BE READ IN CONJUNCTION WITH ALL OTHER RELATED DRAWINGS ISSUED BY THE ARCHITECT AND ENGINEER AND SEWERS FOR ADOPTION CURRENT EDITION WHERE APPLICABLE.
2. DO NOT SCALE FROM THIS DRAWING. WORK FROM FIGURED DIMENSIONS ONLY.
3. ALL DIMENSIONS SHOWN IN METRES UNLESS NOTED OTHERWISE.
4. NO DEVIATION FROM THE DETAILS SHOWN ON THIS DRAWING IS PERMITTED WITHOUT PERMISSION FROM THE ENGINEER.
5. PRIVATE FOUL WATER AND SURFACE WATER DRAINAGE IS TO BE CONSTRUCTED IN ACCORDANCE WITH THE CURRENT BUILDING REGULATIONS, BS EN 752, NHBC STANDARDS CHAPTER 5.3 AND RELEVANT AGREEMENT CERTIFICATES.
6. PRIVATE DRAINS TO BE CONSTRUCTED USING FLEXIBLY JOINTED VITRIFIED CLAY PIPES TO BS 65 "SUPER STRENGTH" SPECIFICATION (HEPWORTH SUPERSLEVE OR SIMILAR APPROVED) OR UPVC BUILDING DRAINAGE SYSTEM PIPEWORK TO BS EN 1401, BEDDED AND BACKFILLED IN ACCORDANCE WITH THE MANUFACTURER'S INSTRUCTIONS.
7. INSPECTION CHAMBER SIZES ARE TO BE IN ACCORDANCE WITH THE BUILDING REGULATIONS PART H; TABLE 11 AND MANHOLE SIZES TABLE 12.
8. THE CENTRELINE OF THE MANHOLE IS NOT NECESSARILY COINCIDENTAL WITH THE CENTRELINE OF THE MAIN PIPE.
9. POSITION OF MANHOLE COVER SLAB AND STEP RUNGS TO BE DIRECTED ON SITE.
10. BACKFILLING OF DRAIN TRENCHES ADJACENT TO DWELLINGS OF OTHER STRUCTURES TO BE IN ACCORDANCE WITH THE BUILDING REGULATIONS PART H; DIAGRAM 8.
11. ALL MORTAR TO BE CLASS 1 UNLESS NOTED OTHERWISE.
12. BRICKS TO BE ENGINEERING CLASS B TO BS EN 771-1, LAID IN ENGLISH BOND ON CLASS (i) MORTAR TO CLAUSE 2404, SPECIFICATION FOR HIGHWAY WORKS. ANY OVER EXCAVATION TO BE MADE GOOD.
13. FOR ADOPTABLE DRAINAGE PERMITTED MATERIAL FOR PIPES ARE SHOWN IN PART E, SEWERS FOR ADOPTION CURRENT EDITION.
14. ALL CONCRETE AND CONCRETE PRODUCTS TO BE SULPHATE RESISTING.
15. INSPECTION CHAMBER COVERS IN PRIVATE AREAS SHOULD BE GROUP 1 CLASS A15, IN PEDESTRIAN AREAS INACCESSIBLE TO WHEELED VEHICLES AND GROUP 4 CLASS D400 IN VEHICULAR AREAS.
16. IN COMPLIANCE WITH CDM 2015 ODYSSEY HAS FOLLOWED IT'S DESIGN RISK MANAGEMENT PROCESS FOR HAZARD ELIMINATION AND RISK REDUCTION IN DEVELOPING THE ODYSSEY DESIGNS SHOWN ON THIS DRAWING. THERE ARE NO ABNORMAL OR UNUSUAL RESIDUAL RISKS ASSOCIATED WITH THE DESIGN. ANY OTHER RESIDUAL RISKS ARE THOSE THAT WOULD NORMALLY BE EXPECTED BY COMPETENT PERSONS OR CONTRACTORS ENGAGED ON WORK OF THIS NATURE OR TYPE.

DRAINAGE DESIGN SHOWN SUBJECT TO APPROVAL FROM THE LEAD LOCAL FLOOD AUTHORITY AND LOCAL PLANNING AUTHORITY

FOR PLANNING PURPOSES ONLY

Rev	Amendments	Drn	Chk	App	Date

ODYSSEY
Odyssey House
Unit 3 Winchester Hill Business Park
Winchester Hill, Romsey
Southampton SO51 7UT
Telephone: 01794 537980
Fax: 01256 331134
E: info@odysseyconsult.co.uk
W: www.odysseyconsult.co.uk

Job Title: LAND AT STAKERS FARM, YAPTON

Drawing Title: DRAINAGE CONSTRUCTION DETAILS (SHEET 1 OF 3)

Client: DANDARA LIMITED (SOUTHERN)

Scale	Date	Designed
AS SHOWN	JUL 20	CJL
Drawn	Checked	Approved
CJL	SW	JHM
Job No	Drawing No	Rev
18-204	YAP-180-30	-

N:\19-156 - Land at Stakers Farm, Yapton\Tech\Acad\Drawings\YAP-180-30 Drainage Construction Details (Sheet 1 of 3).dwg