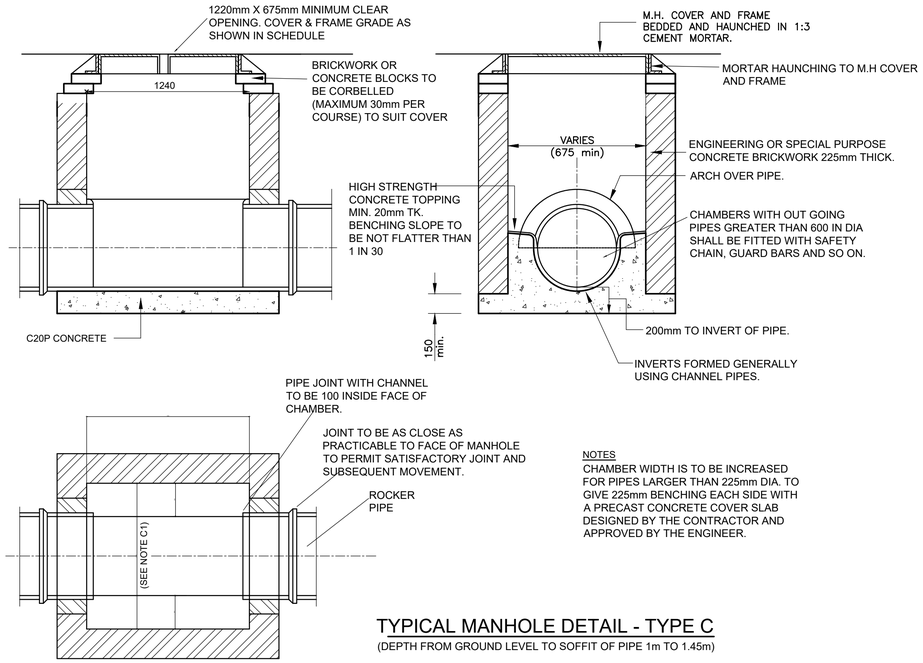

NOTES
CHAMBER WIDTH IS TO BE INCREASED FOR PIPES LARGER THAN 225mm DIA. TO GIVE 225mm BENCHING EACH SIDE WITH A PRECAST CONCRETE COVER SLAB DESIGNED BY THE CONTRACTOR AND APPROVED BY THE ENGINEER.

TYPICAL MANHOLE DETAIL - TYPE C

(DEPTH FROM GROUND LEVEL TO SOFFIT OF PIPE 1m TO 1.45m)

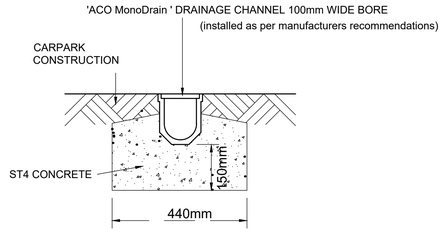

ACO DRAINAGE CHANNEL DETAIL

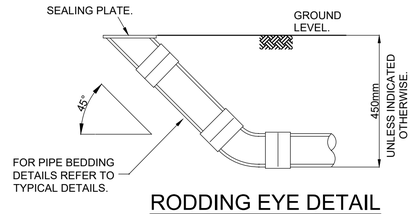

RODDING EYE DETAIL

TO BE USED IN PEDESTRAIN AND LANDSCAPED AREAS NOT SUBJECT TO VEHICULAR LOADING. MAXIMUM DEPTH TO INVERT 600mm.

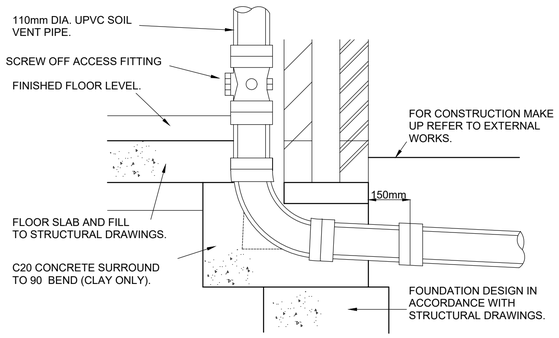

SOIL VENT PIPE CONNECTION

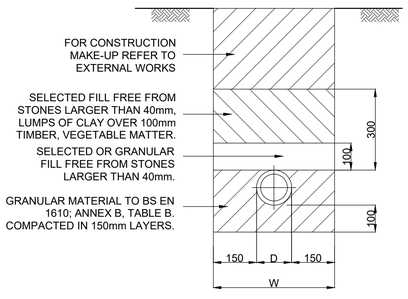

TYPICAL PIPE BEDDING DETAIL: TYPE 3 (UPVC PIPES)

LOCATION: PEDESTRIAN AREAS: 0.6 m - 8.0 m DEEP.
VEHICLE AREAS: 1.2 m - 8.0 m DEEP.

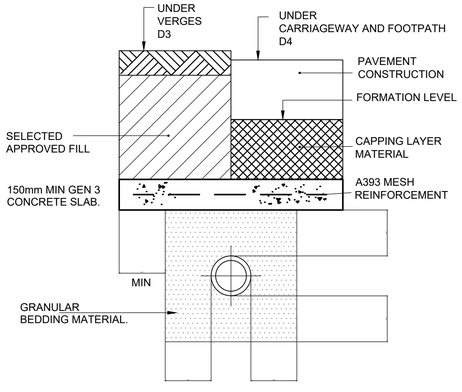

CONCRETE PAD PROTECTION

DESIGN D3 (UNDER VERGES - <900 COVER)
DESIGN D4 (UNDER CARRIAGEWAYS - <1200 COVER)

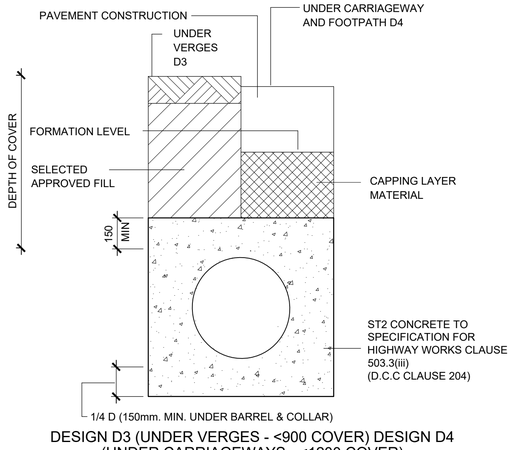

DESIGN D3 (UNDER VERGES - <900 COVER) DESIGN D4 (UNDER CARRIAGEWAYS - <1200 COVER)
BEDDING DETAIL - CLASS 'Z'

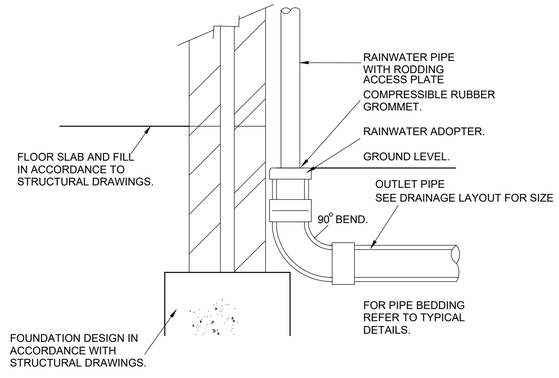

RAINWATER PIPE CONNECTION

NOTES

1. THIS DRAWING IS TO BE READ IN CONJUNCTION WITH ALL OTHER RELATED DRAWINGS ISSUED BY THE ARCHITECT AND ENGINEER AND SEWERS FOR ADOPTION CURRENT EDITION WHERE APPLICABLE.
2. DO NOT SCALE FROM THIS DRAWING. WORK FROM FIGURED DIMENSIONS ONLY.
3. ALL DIMENSIONS SHOWN IN METRES UNLESS NOTED OTHERWISE.
4. NO DEVIATION FROM THE DETAILS SHOWN ON THIS DRAWING IS PERMITTED WITHOUT PERMISSION FROM THE ENGINEER.
5. PRIVATE FOUL WATER AND SURFACE WATER DRAINAGE IS TO BE CONSTRUCTED IN ACCORDANCE WITH THE CURRENT BUILDING REGULATIONS, BS EN 752, NHBC STANDARDS CHAPTER 5.3 AND RELEVANT AGREEMENT CERTIFICATES.
6. PRIVATE DRAINS TO BE CONSTRUCTED USING FLEXIBLY JOINTED VITRIFIED CLAY PIPES TO BS 65 "SUPER STRENGTH" SPECIFICATION (HEPWORTH SUPERSLEVE OR SIMILAR APPROVED) OR UPVC BUILDING DRAINAGE SYSTEM PIPEWORK TO BS EN 1401, BEDDED AND BACKFILLED IN ACCORDANCE WITH THE MANUFACTURER'S INSTRUCTIONS.
7. INSPECTION CHAMBER SIZES ARE TO BE IN ACCORDANCE WITH THE BUILDING REGULATIONS PART H; TABLE 11 AND MANHOLE SIZES TABLE 12.
8. THE CENTRELINE OF THE MANHOLE IS NOT NECESSARILY COINCIDENTAL WITH THE CENTRELINE OF THE MAIN PIPE.
9. POSITION OF MANHOLE COVER SLAB AND STEP RUNGS TO BE DIRECTED ON SITE.
10. BACKFILLING OF DRAIN TRENCHES ADJACENT TO DWELLINGS OF OTHER STRUCTURES TO BE IN ACCORDANCE WITH THE BUILDING REGULATIONS PART H; DIAGRAM 8.
11. ALL MORTAR TO BE CLASS 1 UNLESS NOTED OTHERWISE.
12. BRICKS TO BE ENGINEERING CLASS B TO BS EN 771-1, LAID IN ENGLISH BOND ON CLASS (i) MORTAR TO CLAUSE 2404, SPECIFICATION FOR HIGHWAY WORKS. ANY OVER EXCAVATION TO BE MADE GOOD.
13. FOR ADOPTABLE DRAINAGE PERMITTED MATERIAL FOR PIPES ARE SHOWN IN PART E, SEWERS FOR ADOPTION CURRENT EDITION.
14. ALL CONCRETE AND CONCRETE PRODUCTS TO BE SULPHATE RESISTING.
15. INSPECTION CHAMBER COVERS IN PRIVATE AREAS SHOULD BE GROUP 1 CLASS A15, IN PEDESTRIAN AREAS INACCESSIBLE TO WHEELED VEHICLES AND GROUP 4 CLASS D400 IN VEHICULAR AREAS.
16. IN COMPLIANCE WITH CDM 2015 ODYSSEY HAS FOLLOWED IT'S DESIGN RISK MANAGEMENT PROCESS FOR HAZARD ELIMINATION AND RISK REDUCTION IN DEVELOPING THE ODYSSEY DESIGNS SHOWN ON THIS DRAWING. THERE ARE NO ABNORMAL OR UNUSUAL RESIDUAL RISKS ASSOCIATED WITH THE DESIGN. ANY OTHER RESIDUAL RISKS ARE THOSE THAT WOULD NORMALLY BE EXPECTED BY COMPETENT PERSONS OR CONTRACTORS ENGAGED ON WORK OF THIS NATURE OR TYPE.

DRAINAGE DESIGN SHOWN SUBJECT TO APPROVAL FROM THE LEAD LOCAL FLOOD AUTHORITY AND LOCAL PLANNING AUTHORITY

FOR PLANNING PURPOSES ONLY

Rev	Amendments	Drn	Chk	App	Date

ODYSSEY
Odyssey House
Unit 3 Winchester Hill Business Park
Winchester Hill, Romsey
Southampton SO51 7UT
Telephone: 01794 537980
Fax: 01256 331134
E: info@odysseyconsult.co.uk
W: www.odysseyconsult.co.uk

Job Title
LAND AT STAKERS FARM, YAPTON

Drawing Title
DRAINAGE CONSTRUCTION DETAILS (SHEET 2 OF 3)

Client
DANDARA LIMITED (SOUTHERN)

Scale	Date	Designed
AS SHOWN	JUL 20	CJL
Drawn	Checked	Approved
CJL	SW	JHM
Job No	Drawing No	Rev
18-204	YAP-180-31	-

N:\19-156 - Land at Stakers Farm, Yapton\Tech\Acad\Drawings\YAP-180-31 Drainage Construction Details (Sheet 2 of 3).dwg

ARUN DISTRICT COUNCIL Y/72/20/RES