NOTE
THIS DRAWING MAY BE SCALED FOR PLANNING PURPOSES ONLY.
ALL DIMENSIONS TO BE CHECKED ON SITE PRIOR TO COMMENCEMENT OF WORK. ALL DIMENSIONS RELATING TO SUB-CONTRACTORS OR SUPPLIERS WORK MUST BE CHECKED AND AGREED BETWEEN THE GENERAL CONTRACTOR, THE SUB-CONTRACTOR(S) AND / OR SUPPLIER(S). ALL DIMENSIONS ARE IN MILLIMETRES. ALL WORKS OR MATERIALS INDICATED ON THE DRAWING ARE TO BE TO THE LATEST BRITISH STANDARDS AND ARE TO BE CARRIED OUT IN ACCORDANCE WITH THE RELEVANT CODES OF PRACTICE OR RECOGNISED TRADE ASSOCIATION RECOMMENDATIONS AND PUBLICATIONS.
THIS DRAWING TO BE READ IN CONJUNCTION WITH ALL RELEVANT DRAWINGS AND SPECIFICATIONS OF OTHER CONSULTANTS.
ANY DISCREPANCIES TO BE BROUGHT TO THE ATTENTION OF PDK ARCHITECTURE AND SURVEYING. IF IN DOUBT ASK.
© THIS DRAWING IS THE COPYRIGHT OF PDK ARCHITECTURE AND SURVEYING.

APPR	DATE	STATUS

Horizontal Section

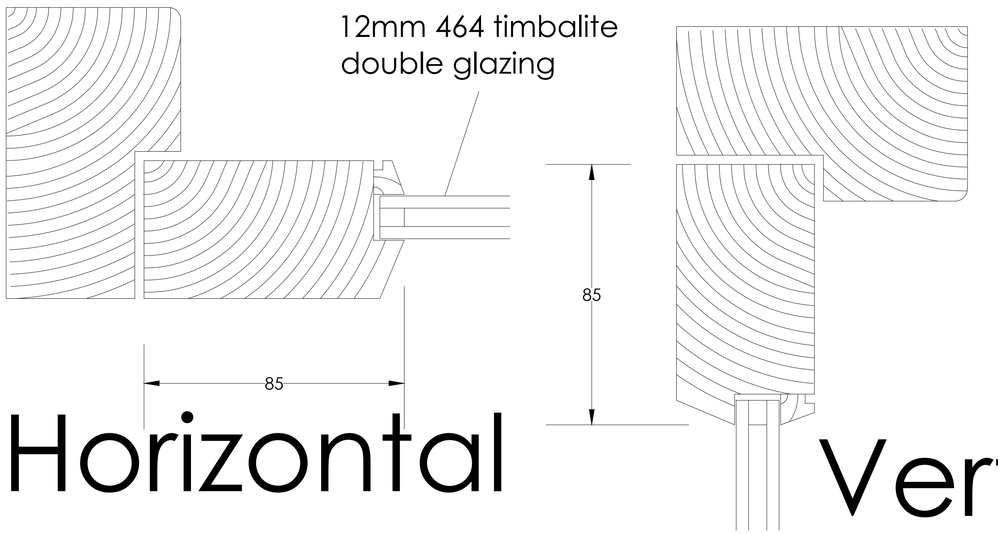

Horizontal Section

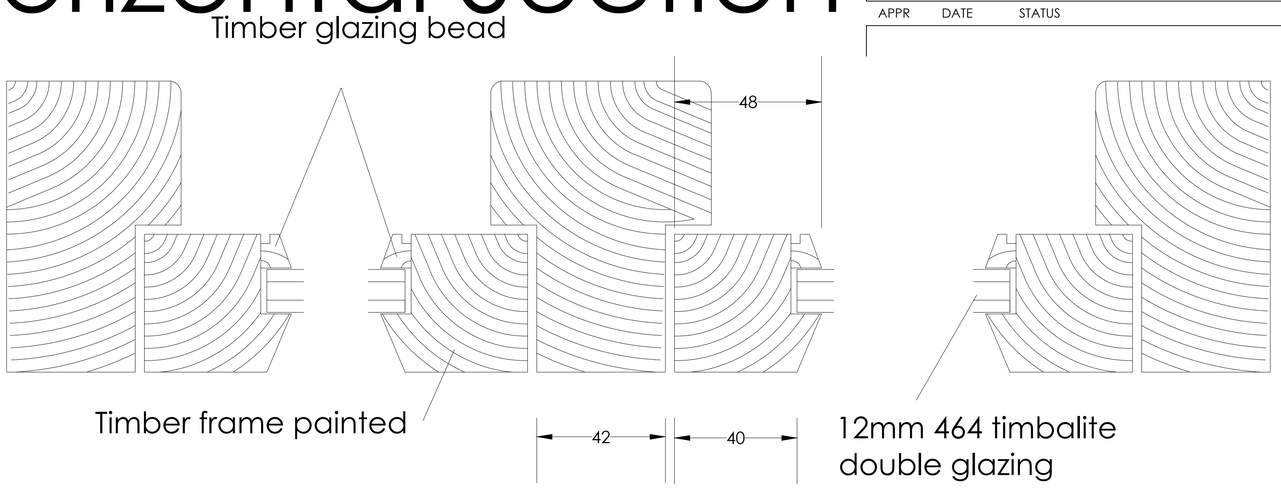

Windows

Vertical Sections

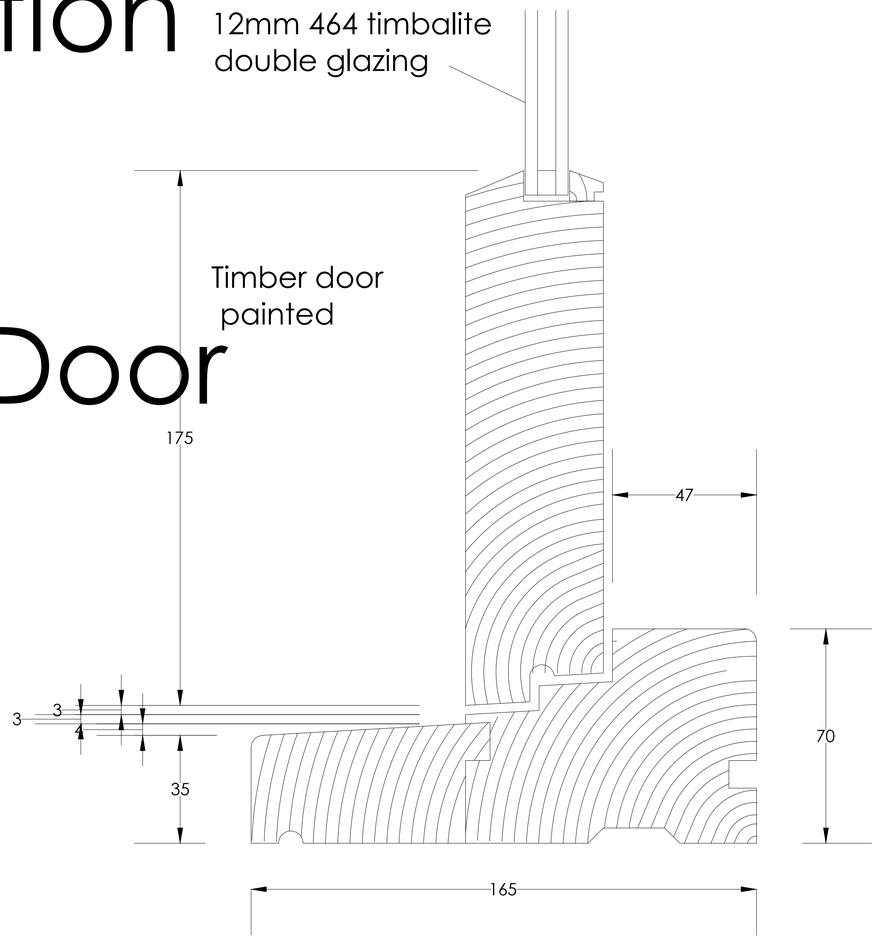

Door

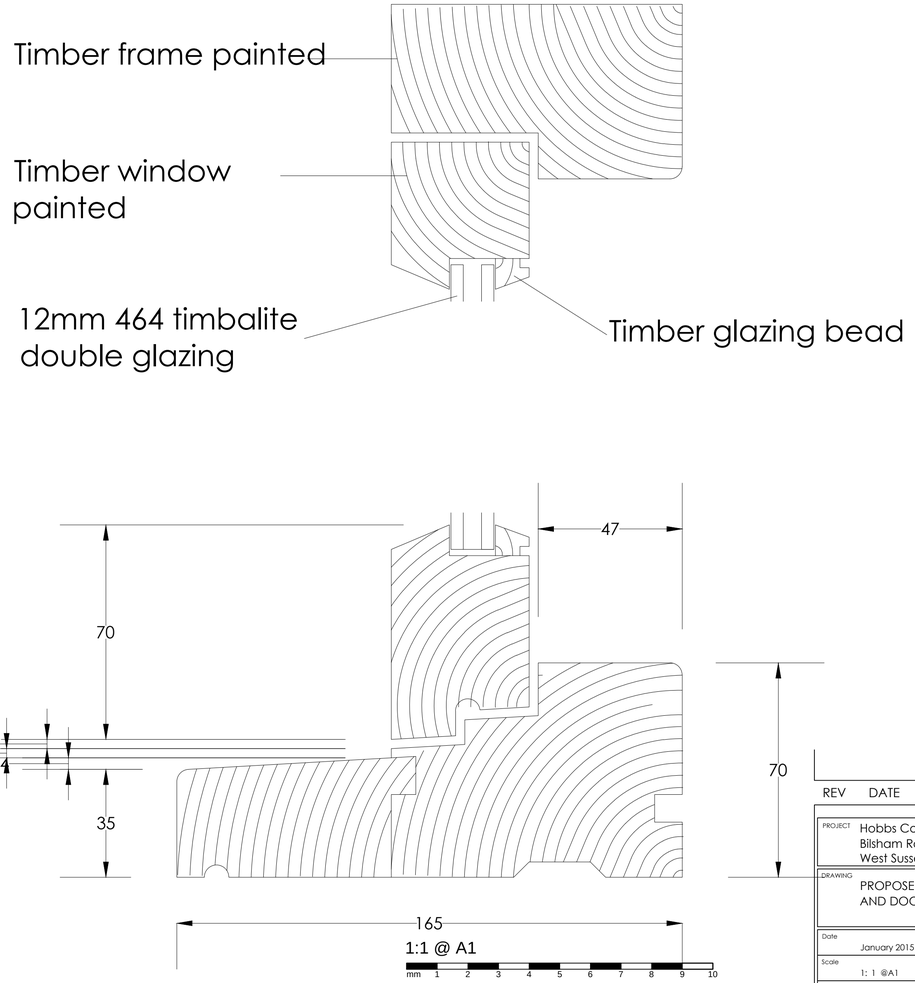

REV	DATE	AMENDMENT	BY

PROJECT: Hobbs Court Plot 5
Bilsham Road. Yapton
West Sussex,

DRAWING: PROPOSED WINDOW AND DOOR SECTIONS

Date: January 2015	Drawn By: PAB
Scale: 1: 1 @A1	Iss. App. By: PJC
Drawing No: 507	File Location: 0060

Chartered Institute of Architectural Technologists Registered Practice

29 Breach Avenue,
Southbourne,
Emsworth,
Hampshire. PO10 8NB
T: 01243 697164
M: 07879471666
www.pdkconsulting.co.uk

PDK Architecture and Surveying

ARUN DISTRICT COUNCIL 19/0159/PL