IMPORTANT NOTE: DIVISIONAL TECHNICAL DEPARTMENTS TO OBTAIN BESPOKE CAVITY TRAY DESIGNS DUE TO POSSIBLE VARIATIONS IN COURSING HEIGHT AND STONE PATTERN. (DRAWING BASED ON ANSTONE 150mm COURSING HEIGHT).

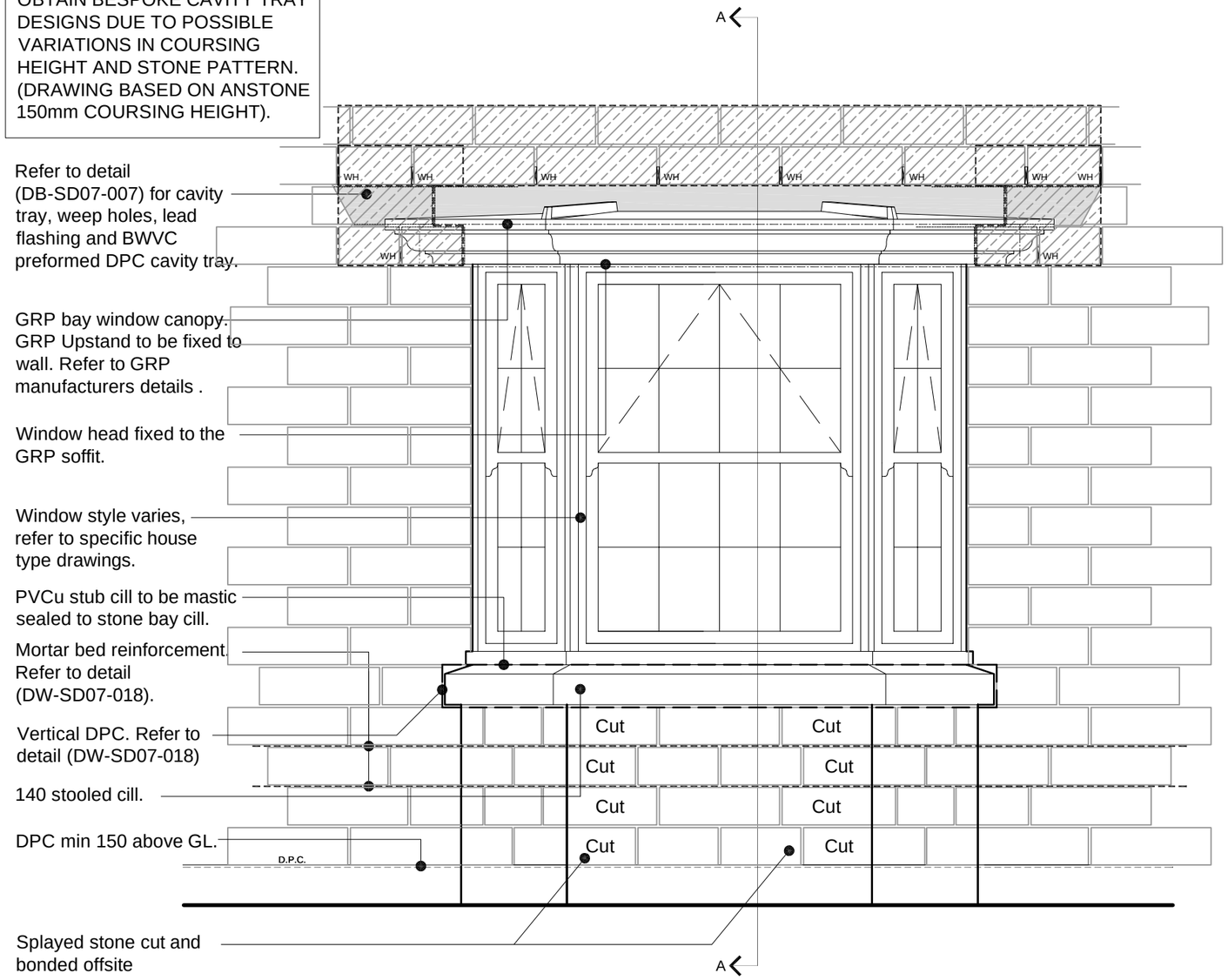

ELEVATION

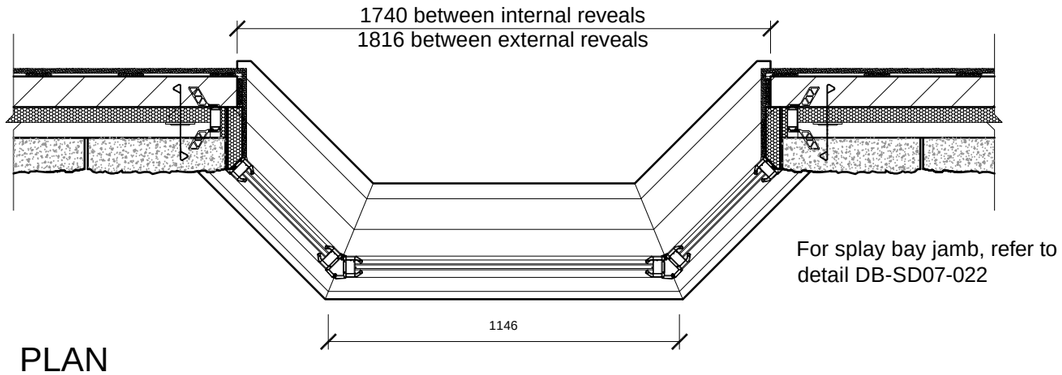

PLAN

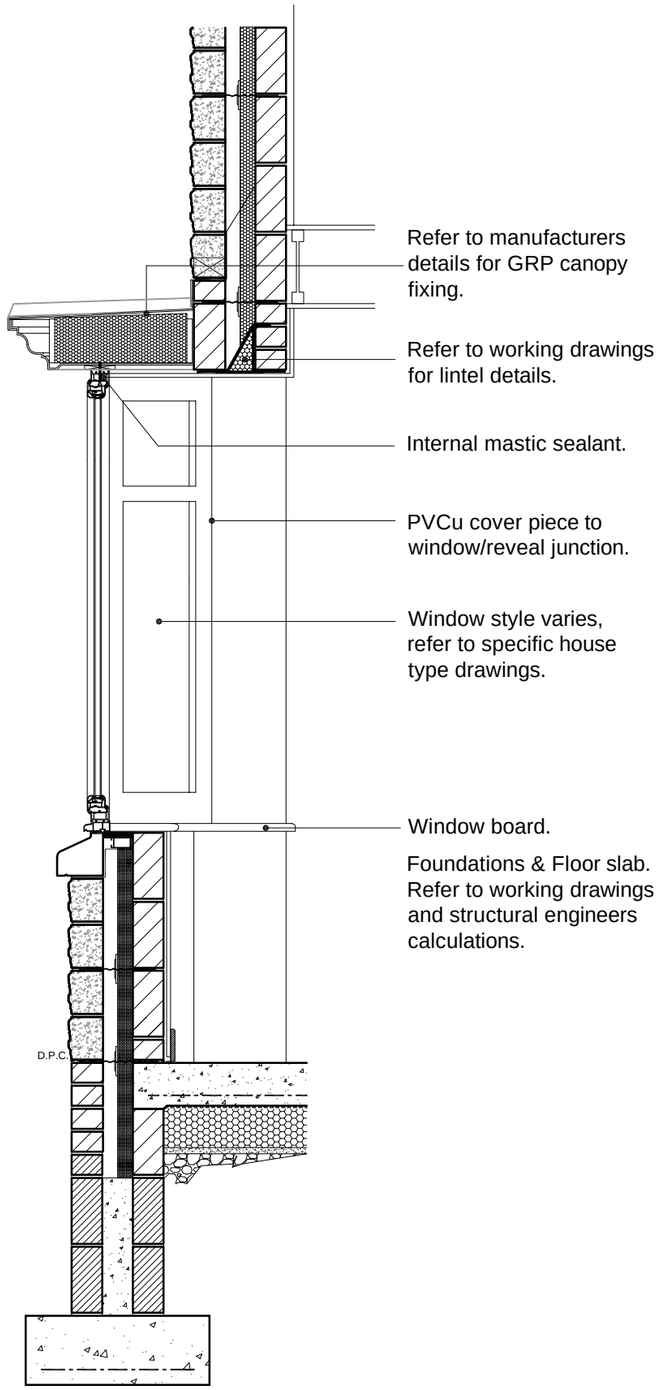

SECTION A-A

DAVID WILSON HOMES

Date:

Description:

Rev:

EXTERNAL REFERENCE :

Brand: **DAVID WILSON HOMES**

Range: **- 7**

Title: **Splay Bay (1740mm) Stone Walling**

Detail No: **DW-SD07-021**

Drawn: **GDT** Checked: **GDT** Scale: **1:20** Date: **Dec, 19**

ARUN DISTRICT COUNCIL Y48/22/DOC