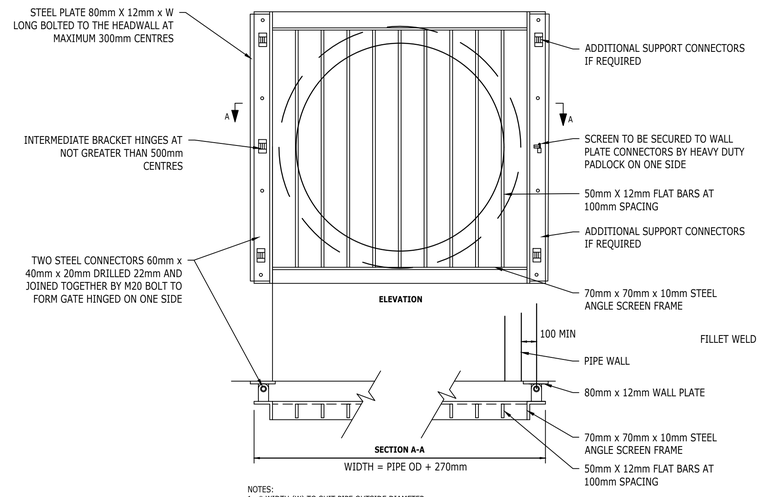

NOTES:
1. * WIDTH (W) TO SUIT PIPE OUTSIDE DIAMETER.
2. MILD STEEL FABRICATION TO BE HOT DIP GALVANISED TO BS EN 1461.

TYPICAL HEADWALL SAFETY GRILL

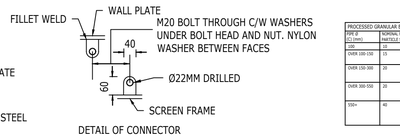

DETAIL OF CONNECTOR

PROCESSED GRANULAR BEDDING AND SIDEFILL MATERIAL FOR PIPES		
PIPE Ø (CL) (mm)	NOMINAL MAX PARTICLE SIZE (MM)	MATERIALS SPECIFIED IN BRITISH STANDARDS
100	10	10mm nominal size single aggregate
OVER 100-150	15	10 or 14mm nominal single-size or 14mm to 5mm graded
OVER 150-300	20	10, 14 or 20mm nominal single-size or 14mm to 5mm graded or 20mm to 5mm graded
OVER 300-550	20	14 or 20mm nominal single-size or 14 to 5mm graded or 20 to 5mm graded
550+	40	14, 20 or 40mm nominal single size crushed rock or 14mm to 5mm graded or 20mm to 5mm graded or 40mm to 5mm graded

TABLE 1

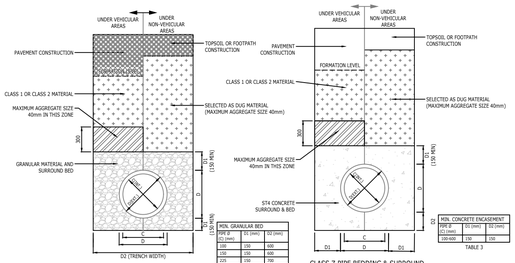

CLASS S PIPE BEDDING & SURROUND
(NTS)

NON. GRANULAR BED		
PIPE Ø (CL) (mm)	D1 (mm)	D2 (mm)
100	100	600
150	150	600
225	150	700
300	150	850
375	150	1050
450	150	1150
525	150	1300
600	150	1350

TABLE 2

NON. CONCRETE ENCASEMENT		
PIPE Ø (CL) (mm)	D1 (mm)	D2 (mm)
100-600	150	150

TABLE 3

CLASS Z PIPE BEDDING & SURROUND
(NTS)

TO BE USED UNDER:

1. EXTERNAL VEHICULAR AREAS WHERE COVER TO PIPE SOFFIT IS GREATER THAN 1200mm
2. ALL EXTERNAL NON-VEHICULAR AREAS WHERE COVER TO PIPE SOFFIT IS GREATER THAN 900mm

NOTE:
ALL PIPEWORK SHALL HAVE FLEXIBLE COUPLINGS (UNLESS STATED OTHERWISE)

TO BE USED UNDER:

1. EXTERNAL VEHICULAR AREAS (**EXCEPT ADOPTABLE HIGHWAYS**) WHERE COVER TO PIPE SOFFIT IS LESS THAN 1200mm
2. ALL EXTERNAL NON-VEHICULAR AREAS WHERE COVER TO PIPE SOFFIT IS EQUAL TO OR LESS THAN 600mm

NOTE:
ALL PIPEWORK WITH CLASS Z SURROUND SHALL HAVE FLEXIBLE COUPLINGS WITH FLEXI-BOARDS ON ALL JOINTS

PIPE BEDDING DETAILS ON NATURAL CLAY SOILS
(NTS)

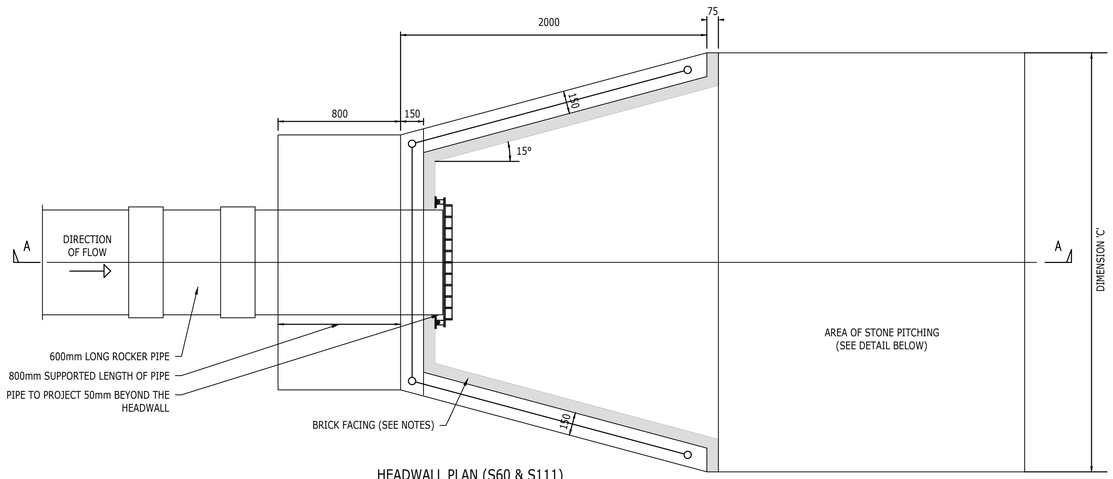

HEADWALL PLAN (S60 & S111)
(1:20)

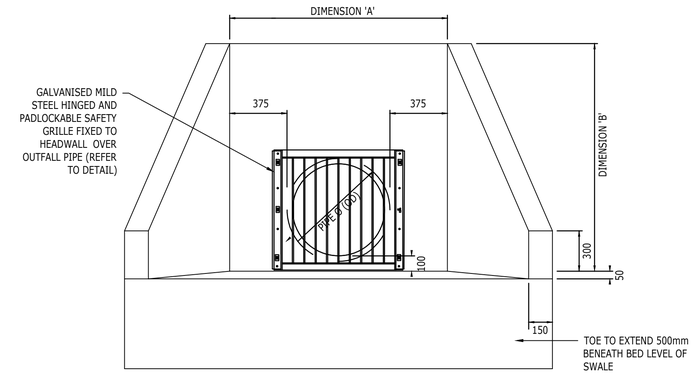

HEADWALL ELEVATION
(1:20)

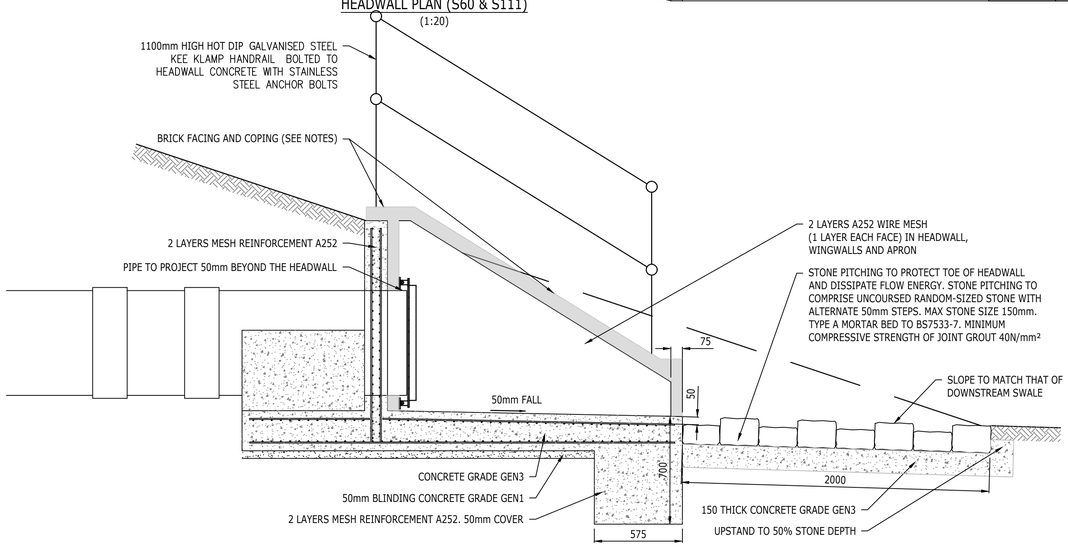

HEADWALL SECTION A-A
(1:20)

HEADWALL DIMENSION TABLE - (ALL DIMENSIONS IN mm)

HEADWALL	PIPE INVERT	PIPE DIAMETER [1]	DIMENSION 'A' [2]	DIMENSION 'B' [2]
1.1	4.411	600	1350	1000
1.2	4.248	525	1275	925
1.3	4.374	375	1125	775
1.4	4.201	450	1200	850
2.1	4.83	450	1200	850
2.2	4.81	375	1125	775
2.3	4.795	450	1200	850
3.1	4.377	450	1200	850
3.2	4.164	450	1200	850
4.1	3.255	525	1275	925
4.2	3.249	525	1275	925
5.1	3.373	525	1275	925
5.2	2.948	525	1275	925

[1] INTERNAL DIAMETER
[2] FIGURES STATED ASSUME USE OF POLYPIPE RIDGISEWER

NOTES

A1

1. This drawing is to be read in conjunction with all other Bright Plan Civils drawings, and with all relevant Architect's and Engineer's drawings and specification. Any discrepancies found are to be reported immediately to the Engineer.
2. Bright Plan Civils accepts no responsibility for inaccuracies in data provided by third parties such as topographic surveys or Ordnance Survey mapping.
3. Do not scale, work to figured dimensions only. All dimensions are in millimeters unless noted otherwise and all levels are in metres from the topographic survey datum.
4. Any information given regarding existing underground services is given in good faith after consultation with the relevant authority, however accuracy is not certain. The main contractor is responsible for checking all information on site prior to work commencing and taking due care whilst undertaking the works.
5. All dimensions to be checked on site. All details and dimensions relating to sub-contractors work must be checked and agreed between the sub-contractor or supplier and the general contractor.
6. The electronic information from this drawing can not be guaranteed as dimensionally drawn exact. Figured dimensions must be used for setting out and detailing. Bright Plan Civils logos and company information must be removed from copies if information is re-used.

RESIDUAL HAZARDS

In addition to the hazards/risks normally associated with the type of work detailed on this drawing, note the following:

1. Uncharted buried services. Contractor to use CAT prior to excavating.
2. Working in live carriageway. Contractor to implement traffic management to ensure safety of the workforce and public.
3. Working in live sewers. Contractor to ensure operatives are familiar with the dangers of working in live sewers.
4. Excavations close to existing structures. Contractor to prepare method statement to ensure stability of existing structures.

It is assumed that all works will be carried out by a competent contractor working, where appropriate, to an approved risk assessment and method statement

All adoptable drainage works to be constructed as detailed in the Code for Adoption Design and Construction Guidance

Rev.	Amendments	Date
A	Headwall 5.1 IL revised	18/07/22

BRIGHT PLAN CIVILS
Transport Planning and Infrastructure Design Consultants
2 West Barn, Norton Lane, Chichester, West Sussex PO20 3AF
Tel: 01243 210418
www.bpcivils.co.uk enquiries@bpcivils.co.uk

Drawing Status: FOR APPROVAL

Client: THAKEHAM

Project: BILSHAM ROAD YAPTON

Drawing Title: S104-CONSTRUCTION DETAILS SHEET 1 OF 3

Scale	Date	Drawn By	Checked By
NTS	FEB 22		

Drawing No. D1956-15-100 Rev. A