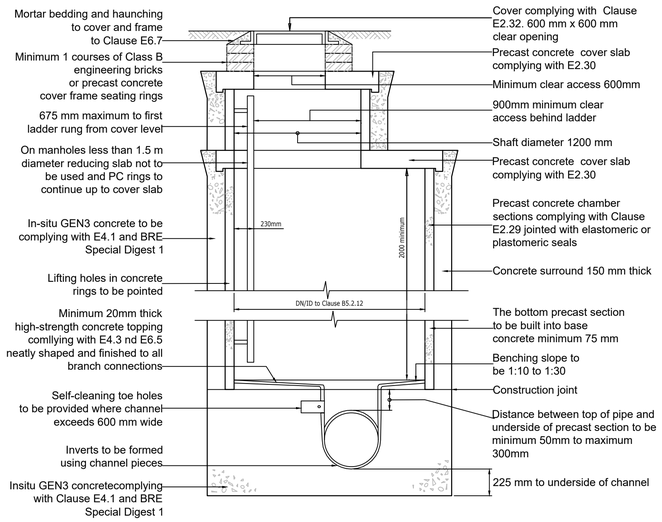

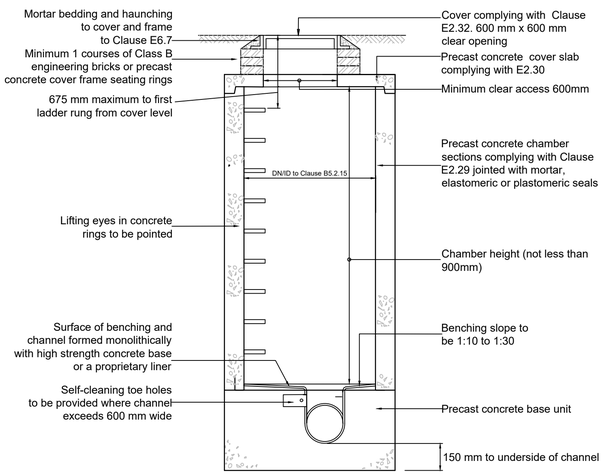

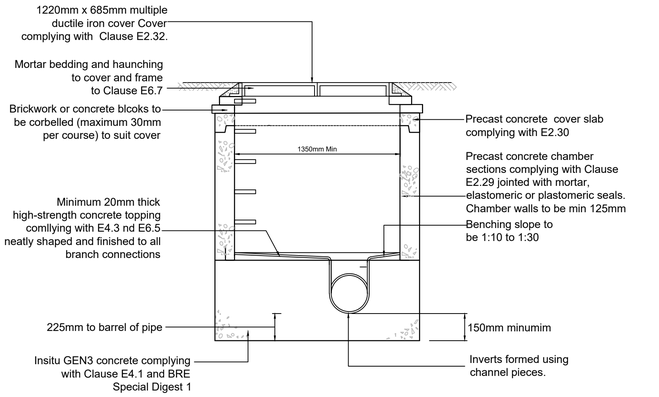

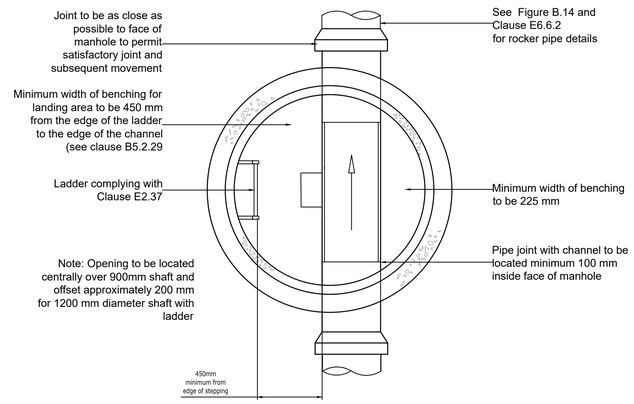

FIGURE B5
TYPICAL MANHOLE DETAIL - TYPE A1
Depth from cover level to pipe soffit 3.0 - 6.0m
Rigid material construction with concrete surround

NOTE:
CPM Ltd 'Perfect Manhole' System shall be used where possible/practical.

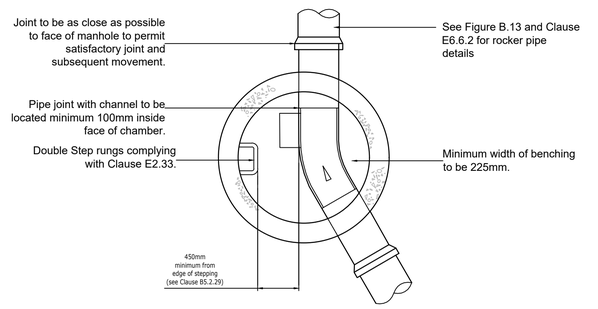

FIGURE B9
TYPICAL MANHOLE DETAIL - TYPE B
Depth from cover level to pipe soffit 1.5 - 3.0m
Rigid material construction without concrete surround

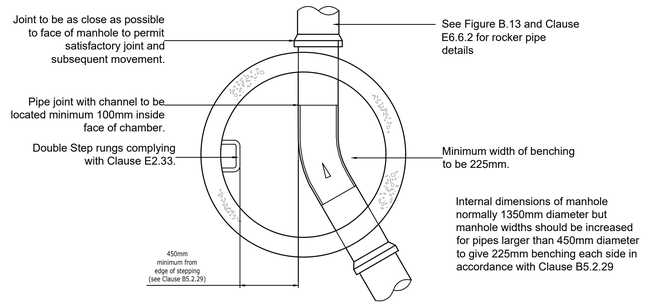

FIGURE B15
TYPICAL MANHOLE DETAIL - TYPE C2
Depth from cover level to pipe soffit less than 1.5m
Rigid material construction without concrete surround

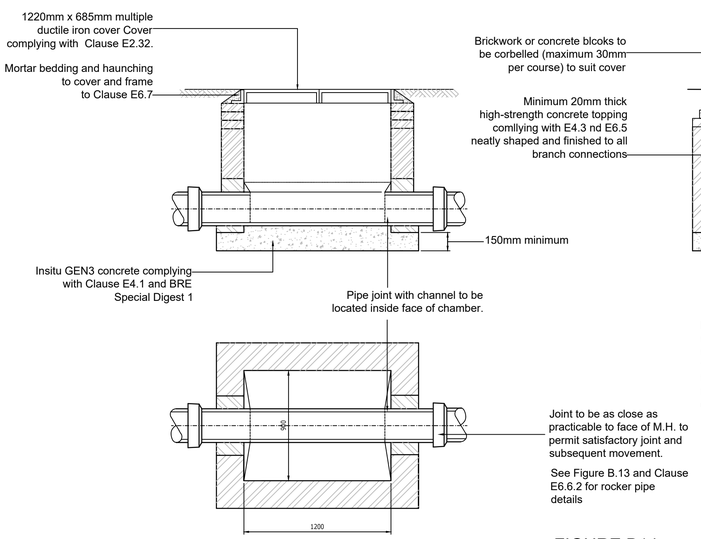

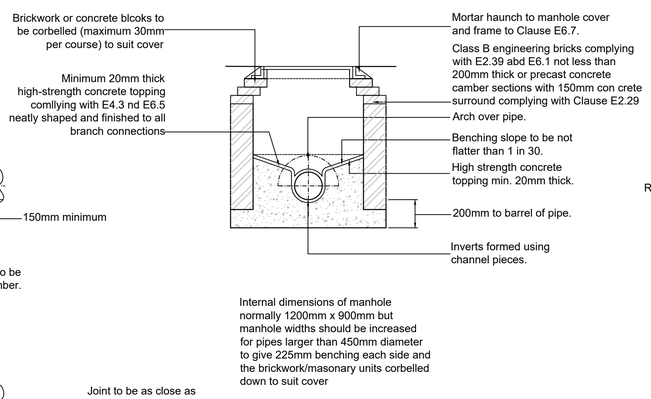

FIGURE B14
TYPICAL MANHOLE DETAIL - TYPE C1
Depth from cover level to pipe soffit less than 1.5
Maximum pipe size 450mm diameter
Rigid material construction

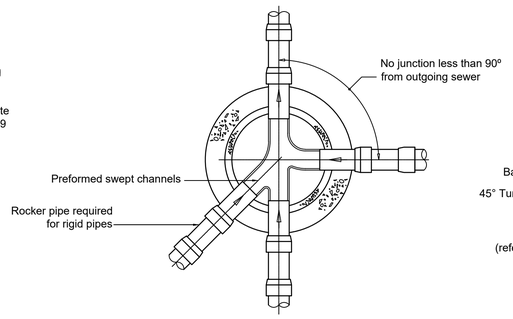

Rigid pipes built into manhole should have a flexible joint as close as feasible to the external face of the structure and the length of the next rocker pipe should be as shown.

Nominal diameter (mm)	Maximum effective length (m)
150 - 600	0.6
601 - 750	1.00
over 750	1.25

All pipes entering the bottom of the manhole to have soffits level.

FIGURE B13
TYPICAL ARRANGEMENT OF PIPE JUNCTIONS WITHIN MANHOLES

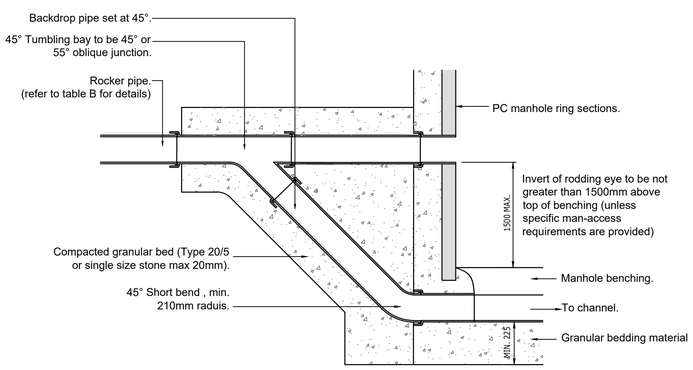

FIGURE B17
TYPICAL RAMPED BACKDROP

NOTES

1. This drawing is to be read in conjunction with all other Bright Plan Civils drawings, and with all relevant Architect's and Engineer's drawings and specification. Any discrepancies found are to be reported immediately to the Engineer.
2. Bright Plan Civils accepts no responsibility for inaccuracies in data provided by third parties such as topographic surveys or Ordnance Survey mapping.
3. Do not scale, work to figured dimensions only. All dimensions are in millimeters unless noted otherwise and all levels are in metres from the topographic survey datum.
4. Any information given regarding existing underground services is given in good faith after consultation with the relevant authority, however accuracy is not certain. The main contractor is responsible for checking all information on site prior to work commencing and taking due care whilst undertaking the works.
5. All dimensions to be checked on site. All details and dimensions relating to sub-contractors work must be checked and agreed between the sub-contractor or supplier and the general contractor.
6. The electronic information from this drawing can not be guaranteed as dimensionally drawn exact. Figured dimensions must be used for setting out and detailing. Bright Plan Civils logos and company information must be removed from copies if information is re-used.

RESIDUAL HAZARDS

In addition to the hazards/risks normally associated with the type of work detailed on this drawing, note the following:

1. Uncharted buried services. Contractor to use CAT prior to excavating.
2. Working in live carriageway. Contractor to implement traffic management to ensure safety of the workforce and public.
3. Working in live sewers. Contractor to ensure operatives are familiar with the dangers of working in live sewers.
4. Excavations close to existing structures. Contractor to prepare method statement to ensure stability of existing structures.

It is assumed that all works will be carried out by a competent contractor working, where appropriate, to an approved risk assessment and method statement

All adoptable drainage works to be constructed as detailed in the Code for Adoption Design and Construction Guidance.

Rev.	Amendments	Date
A	CHAMBER TYPES REVISED TO ALIGN WITH DCG	10/05/2022

BRIGHT PLAN CIVILS
Transport Planning and Infrastructure Design Consultants
2 West Barn, Norton Lane, Chichester, West Sussex PO20 3AF
Tel: 01243 210418
www.bpcivils.co.uk enquiries@bpcivils.co.uk

Drawing Status: FOR APPROVAL
Client: THAKEHAM
Project: BILSHAM ROAD YAPTON
Drawing Title: S104-CONSTRUCTION DETAILS SHEET 2 OF 3
Scale: NTS | Date: FEB 22 | Drawn By | Checked By
Drawing No.: D1956-15-101 | Rev.: A