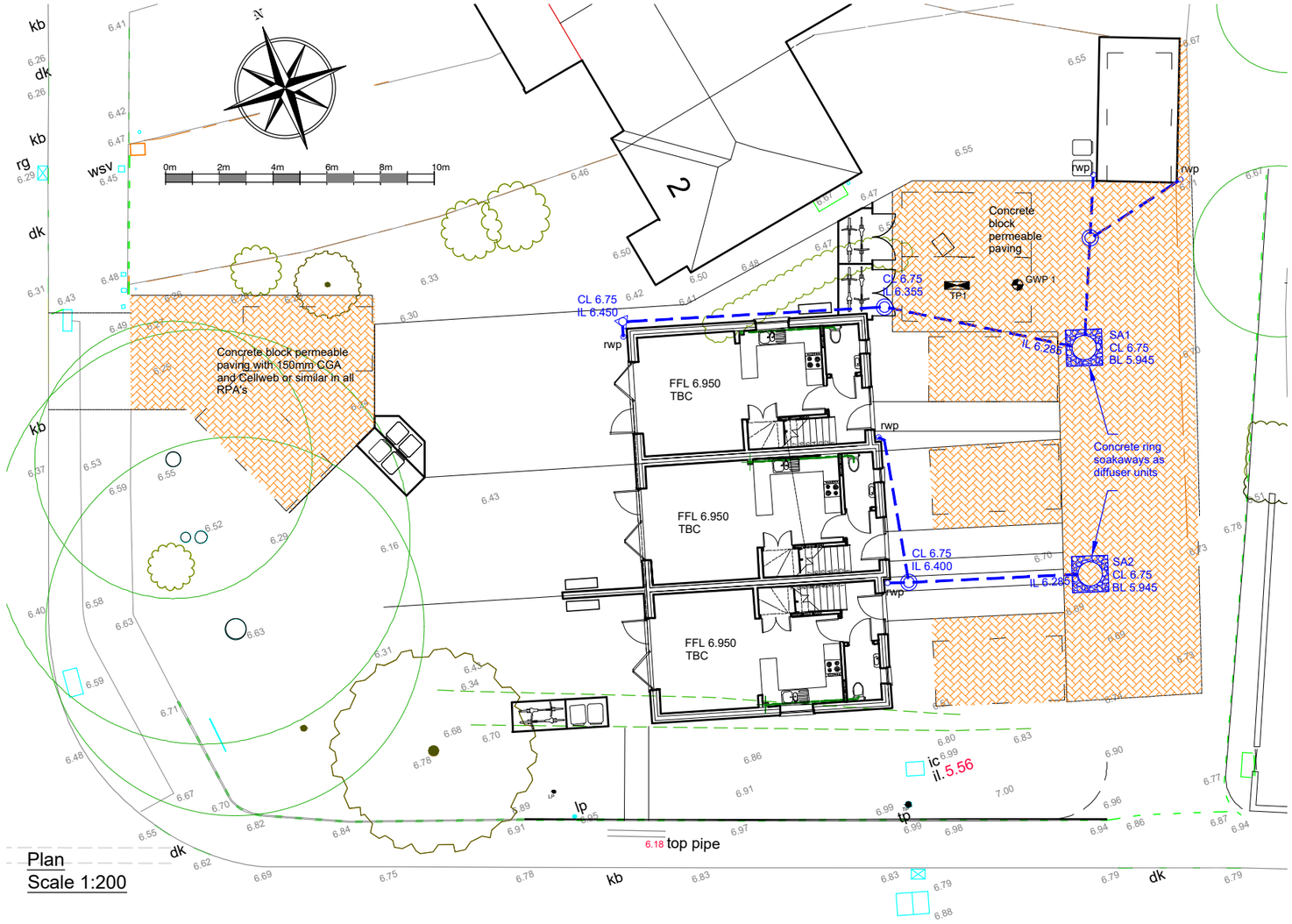

Plan
Scale 1:200

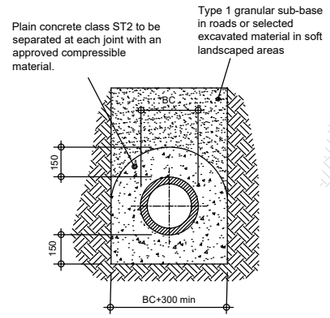

CONCRETE SURROUND (CLASS Z)

To be used where cover to crown of pipe is less than 600mm under soft landscaped areas and less than 1200mm under vehicular areas

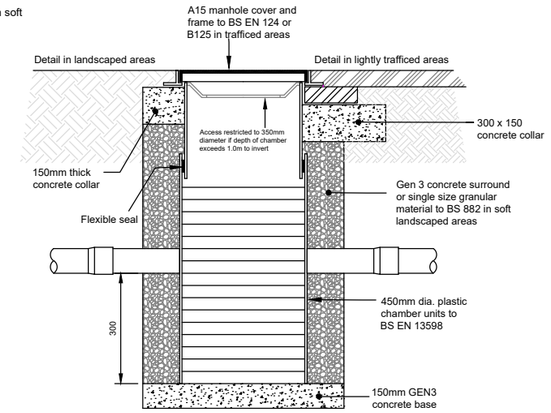

Typical Silt Trap Inspection Chamber Detail

Results from percolation tests carried out in 1050 x 350 trialpit (TP1)

Test 1 2.937×10^{-5} m/s
Test 2 1.636×10^{-5} m/s
Test 3 1.460×10^{-5} m/s

Note: Tests carried out in early March 2026

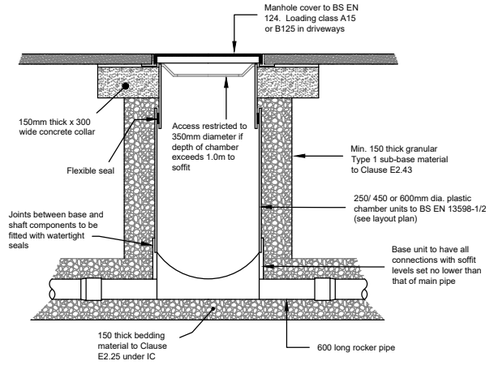

Typical Access Chamber Detail - Type E
(for use in soft landscaped areas and footways

Key

- Proposed surface water drainage. 100mm dia. solid wall upvc at min 1:100
- 250 dia Type E surface water IC
- 450 dia silt trap inspection chamber with 300 sump
- 0.9m diameter concrete ring soakaway 0.8m deep from cover level to top of base
- Site boundary
- TP1 Trial pit for percolation testing
- GWP 1 Groundwater monitoring site

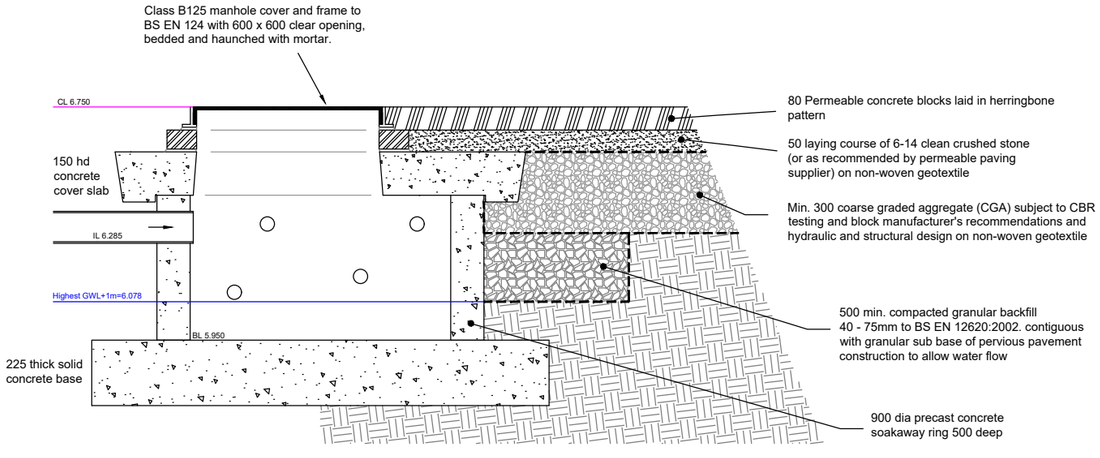

Soakaway and Permeable Paving Construction Details

Location Plan - scale 1:1250

Rev.	Description	Drn.	Date
-	Original	RTC	26.5.26

Project
2 Downview Road
Yapton

Client
Ware Builders

Drawing Title
Surface Water Drainage

Robert Clark
Chartered Civil Engineer
Willow Cottage, Herne Lane, Rustington
West Sussex BN16 3EE
07778 903891 Bob.Clark1485@gmail.com

© This drawing is the copyright of Robert Clark BSc CEng MICE
It may not be copied or reproduced without his written authority

Scale: As shown
At original: A3
Drawing Number: 2162/D1
Revision: -