Southern Testing
Environmental & Geotechnical

Desk Study & Risk Assessment Report

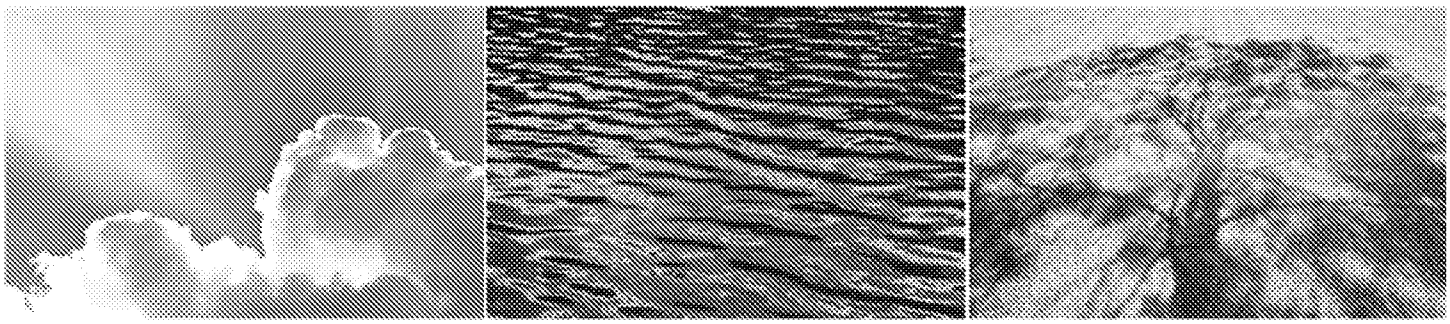

Desk Studies | Risk Assessments | Site Investigations | Geotechnical | Contamination Investigations | Remediation Design and Validation

Site: Land West of Kings Close, Yapton, BN18 0EX

Client: Prime Securities Ltd

Report Date: 28 November 2013

Project Reference: DS2535

Southern Testing Laboratories Limited
Keatts House, Shard Way, East Grinstead, West Sussex, RH19 4QA
[redacted]

ST Consult is a Regional Office of Southern Testing
ST Consult, Twigden Barn, Stoke Road, Creaton, Northamptonshire, NN6 8LU
[redacted]

ARUN DISTRICT COUNCIL Y/22/14/

SUMMARY

The site, which extends to about 0.5ha, comprises a former works with associated access road and buildings. It is proposed to redevelop the site with a series of residential properties with associated access road, car parking and private gardens.

Geological records indicate the site to be underlain by River Terrace Deposits over Upper Chalk

A historical Ordnance Survey map search and desk study was carried out and indicates that the site has a history of agricultural use prior to it being used for industrial purposes for brick production. More recently the northern part of the site has been occupied by an engineering works.

An intrusive investigation has not been carried out as part of this Desk Study & Risk Assessment.

There is visual evidence of soil contamination in the form of made ground/imported soils and stockpiles of vegetation and other debris across the site. Fragments of suspected asbestos cement sheeting have also been observed within this material. An intrusive site investigation is therefore required to define the nature and extent of potential contamination on site. This should also include the installation of land gas monitoring wells and a programme of return land gas monitoring visits.

There is also the potential for tunnels and other underground features to be present within the chalk strata beneath the site.

This report has been prepared for the sole internal use and reliance of Prime Securities Limited and their appointed Engineers. This report shall not be relied upon or transferred to any other parties without the express written authorization of Southern Testing Laboratories Limited. If an unauthorised third party comes into possession of this report they rely on it at their peril and the authors owe them no duty of care and skill.

The findings and opinions conveyed via this Site Investigation Report are based on information obtained from a variety of sources as detailed within this report, and which Southern Testing Laboratories Ltd believes are reliable. Nevertheless, Southern Testing Laboratories Ltd cannot and does not guarantee the authenticity or reliability of the information it has obtained from others.

[redacted]

M W Stevenson MICE
(Countersigned)

Sarah K Toms MSc AIEMA
(Signed)

For and on behalf of Southern Testing Laboratories Limited

STL: DS2535
28 November 2013

ARUN DISTRICT COUNCIL Y/22/14/

TABLE OF CONTENTS

A INTRODUCTION 1

1 AUTHORITY 1
2 LOCATION 1
3 PROPOSED CONSTRUCTION 1
4 OBJECT 1
5 SCOPE 1

B DESK STUDY & WALKOVER SURVEY 2

6 DESK STUDY 2
7 WALKOVER SURVEY 6

C PRELIMINARY CONCEPTUAL MODEL 7

8 INTRODUCTION 7
9 POTENTIAL SOURCES OF CONTAMINATION 7
10 POLLUTANT LINKAGES AND MODEL SUMMARY 8
11 CONCLUSIONS 9
12 RECOMMENDATIONS 9

APPENDIX A Site Plan
APPENDIX B Photographs
APPENDIX C Desk Study Results

A INTRODUCTION

1 Authority

Our authority for carrying out this work is contained in email correspondence dated 12th November 2013 from Steve Bennett of Crescent Designs on behalf of Prime Securities Ltd.

2 Location

The site is located towards the centre of the village of Yapton, which is situated some 7km to the north west of Littlehampton. The approximate National Grid Reference of the site is SU 979 030.

3 Proposed Construction

It is proposed to develop a 0.5 ha site with housing. Ground loadings have not been given.

For the purposes of the contamination risk assessment, the proposed development land use is classified as **Residential with plant uptake (CLEA model[1]). The gas sensitivity of the site is rated as High (CIRIA C665[2])**

4 Object

This is a Phase 1 Desk Study and Walkover with a risk estimation and evaluation investigation (Tier 1).

The object of the investigation was to assess the potential for soil, groundwater and land gas contamination on the site.

5 Scope

This report presents our desk study findings and our interpretation of these data.

The findings and opinions conveyed via this Site Investigation Report are based on information obtained from a variety of sources as detailed within this report, and which Southern Testing Laboratories Limited believes are reliable. Nevertheless, Southern Testing Laboratories Limited cannot and does not guarantee the authenticity or reliability of the information it has obtained from others.

The site investigation was conducted and this report has been prepared for the sole internal use and reliance of Prime Securities Ltd. and their appointed Engineers. This report shall not be relied upon or transferred to any other parties without the express written authorization of Southern Testing Laboratories Limited. If an unauthorised third party comes into possession of this report they rely on it at their peril and the authors owe them no duty of care and skill.

The recommendations contained in this report may not be appropriate to alternative development schemes.

---

[1] *Environment Agency Publication SC050021/SR3 'Updated technical background to the CLEA Model' (2009).*
[2] *CIRIA C665 (2006) Assessing risks posed by hazardous ground gases to buildings.*

ARUN DISTRICT COUNCIL Y/22/14/

B DESK STUDY & WALKOVER SURVEY

6 Desk Study

A desk study has been carried out. Reference has been made to the following information sources.

- Geological Maps
- Hydrogeological/Groundwater Vulnerability maps
- Aerial Photographs
- Historical Ordnance Survey Maps
- Environmental Databases
- Enquiries with Environment Agency (EA website only)
- BRE Radon Atlas[3]

The environmental databases search report compiled for this desk study contains site-specific environmental data drawn from data sets that comprise publicly available information together with data from third parties, some of which is under review. Accordingly, Southern Testing Laboratories Limited does not warrant its accuracy, reliability or completeness.

The full report is included in Appendix C; a summary of the salient features is included in the following sections of this report.

6.1 Geology

The British Geological Survey Map No 317 indicates that the site geology consists of River Terrace Deposits over Upper Chalk (undifferentiated).

River Terrace Gravels

Terrace gravels are sheets of irregular and sub-rounded gravel and sand, laid down as terraces alongside rivers. There is usually a covering of sandy silty clay, termed brickearth, and old backfilled gravel workings are sometimes found.

Upper Chalk

Upper Chalk is a well known soft white friable limestone of organic origin which is composed of shell debris embedded in a fine matrix of microscopic calcareous bodies produced by planktonic algae (coccoliths).

Upper Chalk is frequently highly fractured and highly permeable, when excellent drainage can be achieved via soakaways. Chalk is slightly soluble in water and, while it has excellent bearing properties when unweathered, this solubility can lead to deep weathering and softening, producing some undesirable characteristics, as far as a building construction is concerned.

The chalk itself may be softened by solution to a depth of 5-15 metres and bearing capacities and engineering properties improve with depth. Where there is an outcrop of impermeable soil overlying the chalk there may be a dramatically increased solution effect. Water may collect over the clay and flow in large quantities to the chalk and cause very rapid solution and settlement at the junction.

Any soakaways in chalk should be kept remote from structures as the concentrated water flow may re-activate old solution features.

[3] *BR 211 (2007) 'Radon: guidance on protective measures for new buildings'*

ARUN DISTRICT COUNCIL Y/22/14/

The upper layers of chalk are often highly weathered, softened and remoulded, and form an irregular boundary with the overlying strata. In addition, solution structures and cavities commonly known as swallow holes can develop. Swallow holes can vary from narrow pipes, several metres in diameter to large depressions up to about 25-30 metres across. In chalk they are frequently infilled with "loose" soils and possibly with weakly bridged cavities.

6.2 Hydrology and Hydrogeology

Data from the Environment Agency and other information relating to controlled waters is summarised below.

Data		Remarks	Possible Hazard to/from Site Y/N
Aquifer Designation	Superficial Deposits	*Secondary A Aquifer* - permeable layers capable of supporting water supplies at a local rather than strategic scale, and in some cases forming an important source of base flow to rivers. These are generally aquifers formerly classified as minor aquifers;	Y
	Bedrock	*Principle Aquifer* - These are layers of rock or drift deposits that have high intergranular and/or fracture permeability - meaning they usually provide a high level of water storage. They may support water supply and/or river base flow on a strategic scale.	Y
Groundwater Vulnerability		*Soils of intermediate leaching potential*: Soils which can possibly transmit a wide range of pollutants.	Y
Abstractions		There are no licences listed within a 500m radius of the site.	N
Source Protection Zones		The site is not located within a Source Protection Zone.	N
Surface Water Features		The nearest surface water feature is detailed to be 341m to the east of the site.	N
Flood Risk		The site is not located within an area which is at risk of flooding from rivers or sea or extreme flooding.	N
Discharge Consents		There are no discharge consents within a 250m radius, there are, however, 3 listings within 251-500m radius. All three are for discharge of other matter-surface water into freshwater river, however all three have been revoked in March 1997.	N

The site is underlain by terrace gravels over upper chalk, which are classified as Secondary A and Principle Aquifers respectively, with overlying soils classified as of intermediate leaching potential. Therefore there is a potential risk that any shallow mobile contamination may migrate through to the groundwater beneath the site.

6.3 Historical Map Search

Copy extracts of historical Ordnance Survey plans dating from 1876 to 2013 were obtained and are presented in Appendix C together with a summary of the salient features.

In brief, the site was initially located within two field units however by the late 1890's a Brick Yard with associated features is located on the central and northern half of the site. The Brick pit detailed in the 1890's extends onto the south west corner of the site by the early 1910's, occupying the site up until the mid 1930's when the yard appears redundant.

ARUN DISTRICT COUNCIL Y/22/14/

From the 1930's the north side of the site is shown developed with a number of small buildings (probably works buildings) with the remainder of the site comprising largely open land. With the exception of a change to the layout of the works buildings over the next 70 year, the site remains unchanged.

The surrounding area is predominantly open fields until the 1950's when the area is gradually developed for residential use, which continued to take over the surrounding fields and wooded area. The earliest maps also show the Arundel Canal just to the north of the site, running in a west to east direction. However, the canal is shown disused and subsequently in filled from the 1890's until 1980's when it is no longer shown (except to the extreme east and west of Yapton.

6.4 Environmental Databases

	Distance (m)	Direction	Details	Possible Hazard to site
Historical Industrial Land Uses	0	SE	Clay, Brick and Tiles (manufacturers).	Y
	0	SE	Infilled ground (pit, quarry etc) - 1992	Y
	82	E	Clay, Brick and Tiles (manufacturers).	Y
	82	E	Infilled ground (pit, quarry etc) – 1992	Y
	304	SW	Unknown filled ground (pond, marsh, river etc.) 1951	N
	330	SW	Unknown filled ground (pond, marsh, river etc.) 1899	N
	338	S	Unknown filled ground (pond, marsh, river etc.) 1962	N
	367	S	Unknown filled ground (pond, marsh, river etc.)	N
	381	NW	Unknown filled ground (pond, marsh, river etc.)	N
	407	NE	Cemetery/grave yard.	N
	477	S	Factory/works.	N
Current Industrial Land Uses	0	NE	Barmly Engineering at Kings Close, Yapton – Precision Engineering Service. This is now listed as inactive.	Y
	116	W	Engineering Service (inactive)	N
	159	N	Pest & Vermin Control	N
	165	SE	Boilers – Servicing & Repairs (inactive),	N
	185	SW	Commercial Cleaning Services (inactive)	N
	185	SW	Carpet Curtain & Upholstery cleaners (inactive)	N
Current and Historical Landfills	285	E	A C Langmede at Disused Canal at Yapton for the period of Dec 1980 to March 1981 for Deposited Waste including Inert waste.	N
	385	E	Local Authority landfill at Old Canal, East of Downview is provided but there are no other details.	N
	378	E	A C Langmead at Wicks Farm for landfill - license lapsed/surrendered since commencement in Dec 1979.	N
Fuel Sites	-	-	There are no records of Fuel Station Entries within a 250m radius of the site.	N
Pollution Incidents	-	-	There are no incidents within a 250m search radius.	N
IPC Part B Authorisations	-	-	None listed within a 1km search radius of the site.	N
Hazardous Substances Consents	-	-	None listed within a 1Km search radius.	N
Sensitive Land Use Designations	-	-	The site is located within an area which has been designated as a Nitrate Vulnerable Zone by DEFRA. .	N

ARUN DISTRICT COUNCIL Y/22/14/

The greatest potential risk relates to the sites former use as a Clay, Brick and Tiles (manufacturers) and later as an unspecified works. There is a potential that the former brick pits would have been backfilled with waste, which may create land gases.

There is also a potential risk from the engineering works which were located on the northern side of the site up until fairly recently.

The site is in relatively close proximity to the former Arundel Canal which has in the past been backfilled within landfill material. The records provided suggest that these practices have only been carried out in areas which are 250m+ from the site boundary, however the historical maps suggest the course of the canal originally ran 15m to the north of the site.

6.5 Geological Hazards and Mining Activities

Data from various sources relating to potential geological hazards at the site are summarized below. The Hazard Potentials listed for the BGS data are as presented in the Envirocheck report, derived from various generic BGS sources, which are not considered as site-specific. It is important that this information is considered in context of the actual site topography, ground conditions encountered during future investigation, and development proposals.

Data Source	Hazard	Hazard Potential to Site	Remarks
BGS	Potential for Collapsible Ground Stability Hazard	Low	-
	Potential for Compressible Ground Stability Hazard	No Hazard	-
	Potential for Ground Dissolution Stability Hazard	Very low	-
	Potential for Landslide Ground Stability Hazard	Very low	-
	Potential for Running Sand Ground Stability Hazard	Low	-
	Potential for Swelling or Shrinking Clay Ground Stability Hazard	Low	-
	Shallow Mining Hazard	There is a record for a BGS Recorded Mineral Site 48m west and 167m of the site boundary for opencast quarrying of the clays and shales (River Terrace Deposits) at Burndell Brickyard. Both are recorded as ceased.	
ARUP	Mining Instability	-	None listed within a 1 km radius of the site. However, there is a potential risk that tunnels and other such underground features may be present within the chalk beneath the site.
CSS/KURG*	Underground openings	-	The nearest underground working is listed 0.3Km to the north of the site for Military Shelter[4]

[4] *Chelsea Spelaeological Society/ Kent Underground Research Group - The Secret Sussex Resistance; 1996; Vol 0; No 0; Page 15; ISSN/ISSBN: 1 873 793 82 0*

ARUN DISTRICT COUNCIL Y/22/14/

6.6 Land Gases

The site is located within the footprint of a historic brickfield, which it appears from the historic database information has been backfilled. During the site walkover it appears that material has also been deposited on the site, raising site levels above that of the surrounding area.

Therefore, pending further intrusive site investigation works, the risk to the site from the potential generation of land gases is rated as moderate to high.

6.7 Radon Risk

According to the publication '*Radon - Guidance on protective measures for new buildings BRE211 (BRE and HPA, 2007)*' the site is not within an area affected by Radon and therefore no special protection measures as regards this gas will be required. See www.ukradon.org for more details.

7 Walkover Survey

A walkover survey was carried out on Thursday 21st November 2013, at which time the weather was generally overcast with a moderate breeze and occasional light rain.

7.1 General Description and Boundaries

The site comprises an irregular shaped area of land to the rear of the Post Office and shops along the southern side of Main Road in the centre of Yapton.

The site is bounded to the east, south and west by gardens to private houses, with Kings Close forming the eastern site boundary. To the north of the site are shops along Main Road.

7.2 Topography and Drainage

With the exception of a small area on the southwest of the site, it appears that the site has been subject to filling, which has raised levels between 1 – 1.5m above what is assumed to be original site level (based on the ground level of the adjacent land). It appears from the topography of the surrounding area that the site would have originally sloped down from north to south and therefore a deeper cover of made ground would be anticipated on the north side of the site.

From an inspection of the surface of the site, the deposited material appears to comprise re-worked clay with scattered gravel of brick, concrete, plastic and other demolition waste. Occasional fragments of asbestos cement were also noted on the site surface.

There are also a number of stockpiles on site. One of these stockpiles appears to comprise mainly vegetation, cut conifers, tree stumps etc. The others consist of a mixture of soils, rubble and vegetation. Further fragments of asbestos cement sheet were noted in two of these stockpiles.

There does not appear to be any formal drainage on the site.

7.3 Vegetation

With the exception of a few conifers on the southwest of the site, which appear to comprise the remains of a recently removed hedge, there is no significant vegetation on the site.

There are a number of mature deciduous (including a Weeping Willow) and coniferous trees in the adjacent garden area to the immediate west of the site.

ARUN DISTRICT COUNCIL Y/22/14/

7.4 Buildings and Land Use on Site and Nearby

With the exception of a small wooden shed on the northwest of the site, there are no buildings on site.

The works buildings shown on the site plan on the north side of the site appear to have been demolished fairly recently, the surface of this area of the site being covered with crushed brick and demolition rubble.

7.5 Photographs

A series of photographs showing the site and surrounding area is included in Appendix B.

C PRELIMINARY CONCEPTUAL MODEL

8 Introduction

In the context of this report, the conceptual model summarises the potential pollutant linkages identified for the site and forms the basis of the risk assessment for the site. The preliminary model comprises the potential sources of contamination, receptors that could be harmed and exposure pathways identified from the desk study and walkover survey. These potential linkages form the basis upon which the investigation is designed and reported.

9 Potential Sources of Contamination

The site has a history of use as a brick field and later as a works (northern part of the site only) and is located within a predominantly residential area.

A number of potentially contaminative uses have been identified, both on site and in the locality.

9.1 On Site Sources

Source	Potential Contaminants
Brick Yard & potentially backfilled pit	Fill materials: Heavy metals, non-metals, PAHs and asbestos Potential land gas generation (methane & carbon dioxide)
Recently deposited/ Fly-tipped materials	Various particularly heavy metals, PAHs & asbestos Potential land gas generation (methane & carbon dioxide)
Engineering Works (north part of the site)	Heavy metals, PAH's, asbestos, possibly petroleum hydrocarbons & solvents

The greatest potential on site risk relates to the former use of the site as a brick yard with a brick pit that appears to have been backfilled. There is also a risk to the site from the more recent deposition of soils and other debris across the site.

The engineering works, now demolished, on the north of the site may have lead to contamination due to the potential use of fuel hydrocarbons used in heating the buildings or a machine lubricants etc. There is also a potential risk from solvents which may have been used in cleaning processes and from asbestos containing materials potentially used in the fabric of the building.

ARUN DISTRICT COUNCIL Y/22/14/

9.2 Off Site Sources

The site may be impacted by contamination migrating from beyond the site boundary. The following potential off-site sources have been identified.

Source	Distance from Site Boundary	Direction	Potential Contaminants	Likely Hazard to Site
Backfilled brick field (to immediate west of site) & backfilled Canal	15	N	Landfill gas generation	Moderate
Historic/Registered/Licensed Landfill Sites	285-481	E	Landfill gas generation	Low

The greatest off site risk is from migrating landfill gases generated by the fill material within the former brickfield to the immediate west of the site and potentially from the backfilling of the canal to the north of the site, although there are no records of this feature having been backfilled.

10 Pollutant Linkages and Model Summary

The following diagram shows the potential pollutant linkages identified for the site and summarises the preliminary conceptual model:

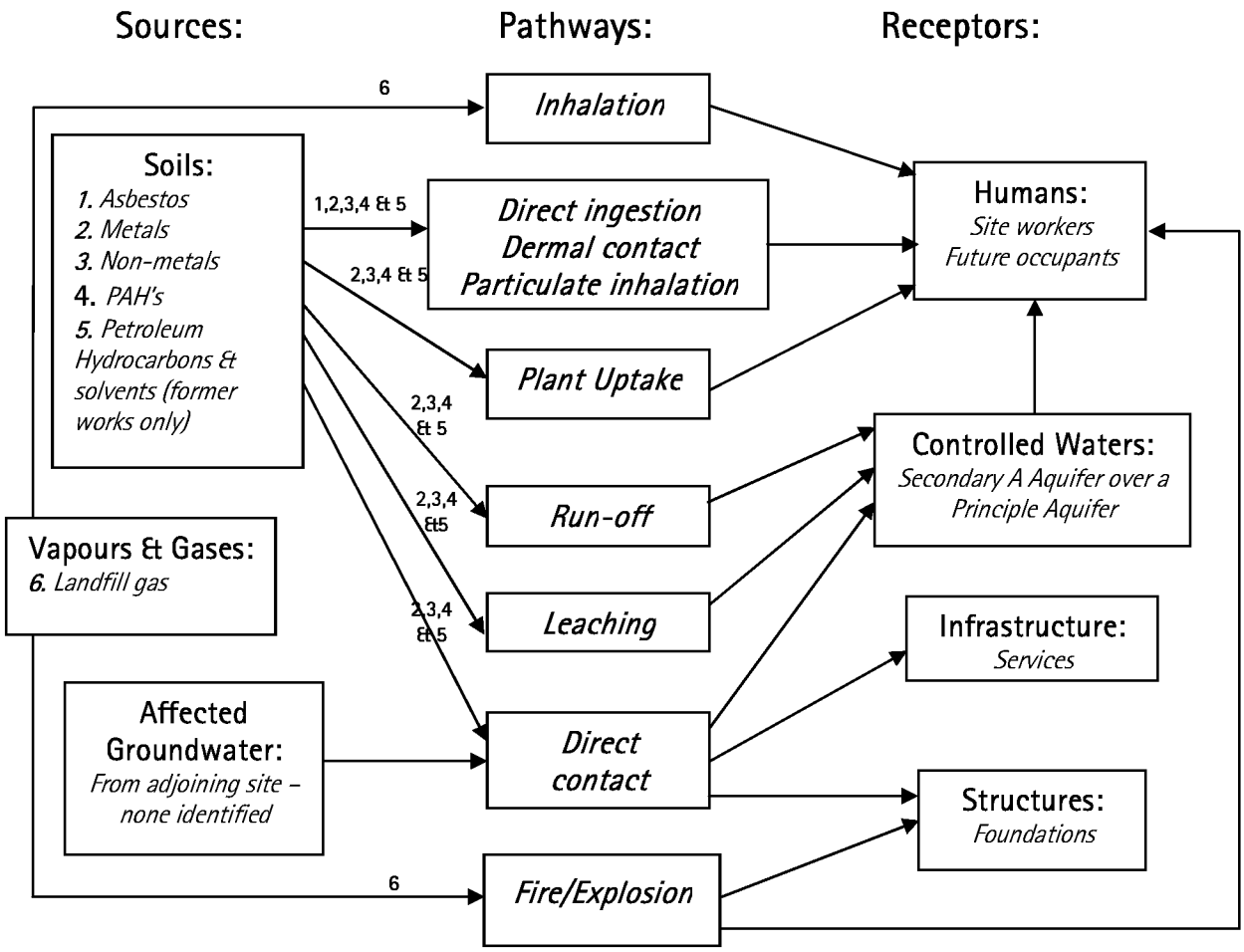

// Denotes potential pollutant linkage not complete

ARUN DISTRICT COUNCIL Y/22/14/

Given the proposals for redevelopment comprising houses with private gardens, the risk to future site users from any potential contamination on site is moderate to high. There is a risk to site ground workers due to contact with potentially contaminated soils.

There is also a risk to controlled waters under the site from the potential leaching of contaminates.

11 Conclusions

This report has been compiled through a study of information available, including current and historical land use, environmental database survey, web based searches and the site walkover survey, to identify potential areas of concern that could be classed as 'sources', which could have an adverse effect upon a sensitive 'receptor'.

It is proposed to redevelop the site residential use, comprising houses with private gardens.

Identified potential sources of contamination include:

- Former use of the site as part of a brick field including a brick pit.
- Potential backfilling of the brick pit and more recent importation of soils and other materials.
- Potential use of hydrocarbon fuels and solvents within the works on the north side of the site.

These potential sources of contamination could pose a risk to sensitive receptors, which comprise:

- Site workers
- End users
- Underlying Secondary A and Principal Aquifer

The various migration pathways taken by the potential contaminants (sources) to impact upon a receptor are shown in the Preliminary Conceptual Site Model above.

Intrusive investigations of the subsurface strata should be undertaken so that the migration pathways and potential risk to sensitive receptors such as the underlying aquifer and the site end users can be fully assessed. This would allow revisions to be made to the preliminary conceptual model, the potential migration pathways to be reassessed, with recommendations provided to mitigate any risk.

The greatest potential contaminative past land use is the use of the site as a brick yard with associated brick pits. The pit is detailed on the historic map extracts as extending onto the south west corner of the site between 1912-1930's. However, after this time the pit is no longer shown and is most likely to have been backfilled although there are no records of this. In addition, off site to the north the Arundel Canal was located in a west to east direction but was subsequently gradually backfilled between 1890's to the 1980's. There are no records on the material used to backfill this cutting.

There is also evidence of the more recent placement of imported material across the site.

12 Recommendations

An intrusive, geo-environmental site investigation, comprising a number of exploratory holes, installed using a suitable drilling rig/excavator, should be carried out to assess the underlying soils for contamination purposes and to gain information for foundation design.

The exploratory holes would be located to provide reasonable coverage of the site, with respect to potential contamination of underlying soils and to provide information relating to the swelling and shrinkage of the soil, any potential settlement, and soil bearing capacity. This information can then be used to recommend foundation systems and floor slab options for the proposed new buildings.

ARUN DISTRICT COUNCIL Y/22/14/

Soil samples should be taken for chemical analysis. This will determine the nature, extent, and depth of any made ground present and the degree of possible contamination of the ground that may have occurred. This would enable the sources and migration pathways to be assessed and the risk assessment redefined. It would also provide information for foundation design.

Allowance should also be made for the installation of a series of land gas monitoring wells across the site, along with a minimum of 6 no. return monitoring visits over a 3 month period, which is the minimum number of monitoring episodes recommended by CIRIA[5] in order to correctly classify the site.

[5] *CIRIA C665 (2006) Assessing risks posed by hazardous ground gases to buildings.*

ARUN DISTRICT COUNCIL Y/22/14/

APPENDIX A

Site Plan

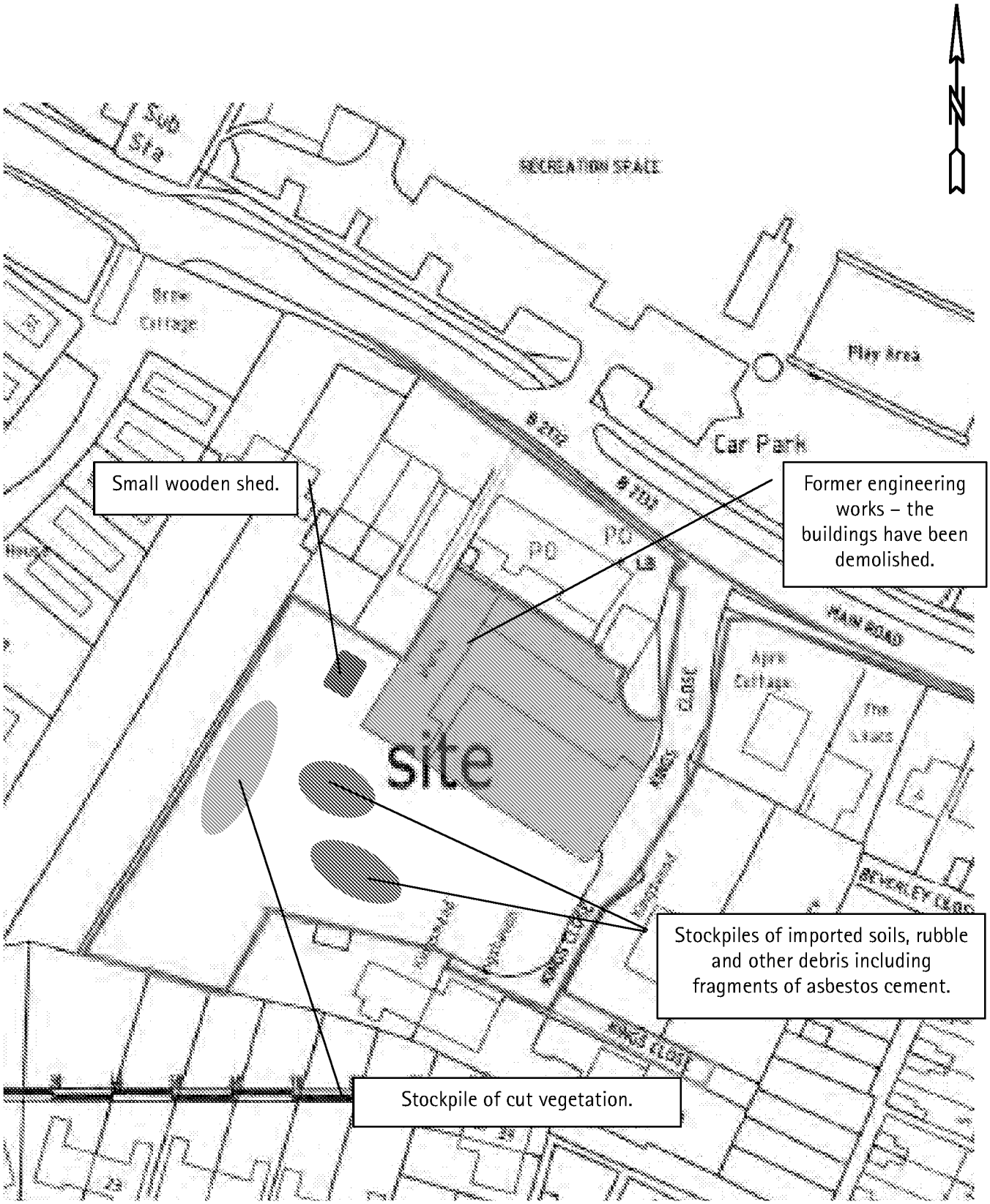

Site:	Land to the west of Kings Close, Yapton	STL: DS2535	Fig No: 1 – Site plan
Date:	21 November 2013		Not to scale

Southern Testing

Southern Testing: Keeble House, Stuart Way, East Grinstead, West Sussex RH19 4QA
ST Consult: Twigden Barns, Brixworth Road, Creaton, Northampton NN6 8NN

ST Consult

APPENDIX B

Photographs

DS2535 - Land to the east of Kings Close, Yapton

Plate 1: Site access from Kings Close – former works located on the LHS of the photograph.

Plate 2: Looking west across the site from Kings Close.

Plate 3: Approximate 1.0m drop from the site down to the adjacent private garden on the southern side of the site.

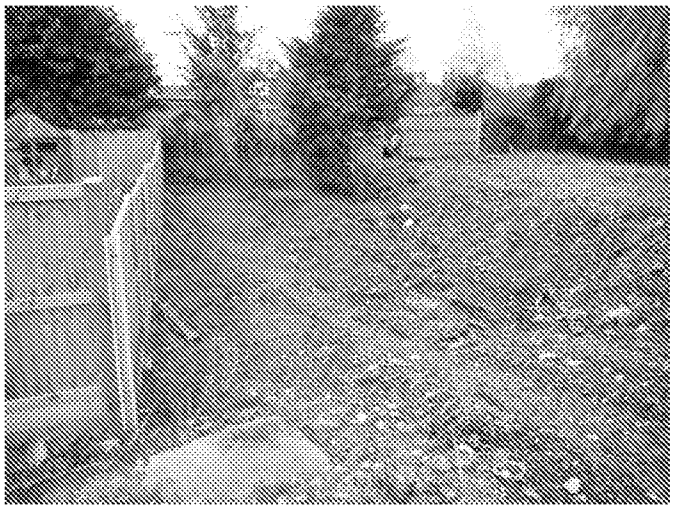

Plate 4: A small area on the southwest of the site does not appear to have been made up.

Plate 5: Looking north across the western side of the site.

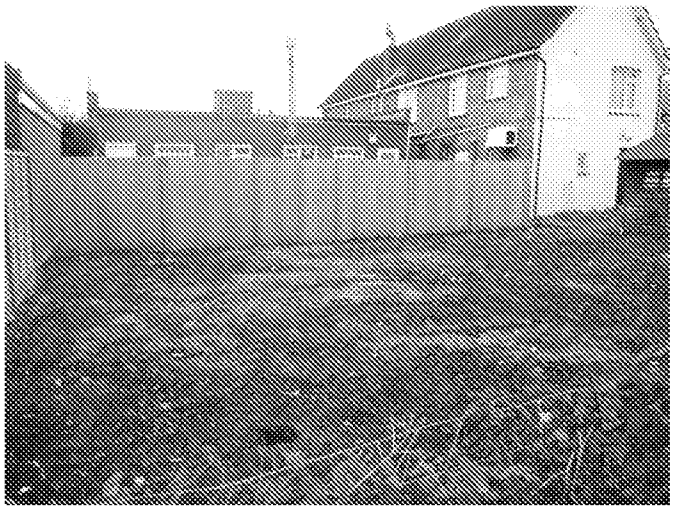

Plate 6: A small area of the northern part of the site appears to have been cleared.

Photographs taken by STL on 21st November 2013

ARUN DISTRICT COUNCIL Y/22/14/

Plate 7: One of the stockpiles of material on site.

Plate 8: Fragments of asbestos cement were noted on the surface of the stockpile.

Plate 9: Fragments of asbestos cement were also noted scattered across the site surface.

Plate 10: Stockpile of cut vegetation on the southwest of the site.

Plate 11: Location of the former engineering works on the north side of the site.

Plate 12: As plate 11.

Photographs taken by STL on 21st November 2013

APPENDIX C

Desk Study Results

Historical Ordnance Survey Map Interpretation				
Map Date	Scale	Features on site	Features in surrounding area	Significant Potential Contamination Sources
1876-1877	1: 2, 500	The site is shown straddling two field units (units 72 & 249). A rectangular shaped building or feature is shown centrally. The most northerly section of the site is bound by a roadway.	The surrounding area is predominantly open fields with occasional wooded areas. Occasional orchards are shown approximately 100m to the east, 200m to the south and to the north 200, 220m . These are surrounded by occasional residential properties with associated roadways, possibly representing a village. Within this area two public houses are shown (Shoulder of Mutton & Black Dog Inn) 280-320m from the site. The Arundel Canal (disused) is shown to the immediate north of the site, approximately 20m from the site.	Unlikely Possibly Unlikely Possibly
1880	1:10, 560	At this scale and orientation the site is shown located to the south of the village of Yapton.	The village of Yapton is located to the north with occasional large manors/estates with orchards, occasional churches, a school and a Smithy. The area is served by a series of access roads and the canal (Chichester & Arundel Canal, with disused towing path). To the extreme north of the map a railway line is shown, approx 1.25km from the site.	
1897-1898	1: 2, 500	The site is shown occupying some the area shown as a Brick Yard. Three rectangular shaped buildings are shown to the north and central areas of the site. Smaller associated buildings are also shown attached to these.	The canal is no longer shown, the area is shown occupied by a cutting, although the region to the north west, approximately 25m from the site boundary appears to have been backfilled. To the immediate west, within the area shown as a Brick Yard a pit or cutting is shown approximately 40m from the site boundary. Some further residential development appears to have taken place to the north in the village of Yapton. In addition a series of terraced houses are also shown tot eh south east, approximately 50m from the site. In general, occasional residential development has taken place along access roads and tracks in the area.	Yes Yes Unlikely

Historical Ordnance Survey Map Interpretation				
Map Date	Scale	Features on site	Features in surrounding area	Significant Potential Contamination Sources
1899	1: 10, 560	The site and surrounding area appears unchanged.		
1912	1: 2, 500	The two buildings at the central areas of the site appear unchanged in size although they are detailed as square shaped, rather than two rectangles. The cutting to the south west appears to have extended on to the south eastern corner of the site, towards the buildings on site.	The number of terraced houses to the south east has increased; a further 6 have been built. A series of two kilns are shown to the west, approximately 40 & 60m from the site. A second Brick Field is shown to the north east, approximately 80m, although the actual pit appears to be 225m from the site.	Yes Possibly Possibly
1913	1: 10, 560	At this scale and orientation the site appears unchanged from the earlier maps.	The surrounding area appears to be predominantly open fields with occasional villages and hamlets.	Unlikely
1937-1940	1: 2, 500	The site is shown occupied by a circular track to the south east, roughly divided to the west by a fence line. A narrow rectangular shape feature is shown, it is not clear what this represents. The back scar to the pit is shown along the south western boundary but the remainder appears as backfilled with a tree denoted.	Two semi-detached residential properties with gardens have replaced the region of the brick works to the west. The south western section of the pit appears to have been backfilled. A Hall is shown to the immediate north of the site, in the area between the site and the roadway. The roadway is now shown as Burndell Road. Further residential infilling has taken place. The Brick Yard to the north east is now shown predominantly featureless, although there are two residential properties and an access road (under construction or proposed).	Yes Unlikely
1951	1: 10,560	The site itself appears unchanged.	To the south in the adjoining fields a series of roadways is shown proposed or under construction. The region to the east is shown as Burndell, a series of large industrial units are also shown, approximately 750m from the site. A large Nursery is shown to the north west, approximately 1.25Km from the site.	Unlikely Unlikely, given the distance. Again, unlikely, given the distance involved.
1962	1: 10, 000	As the earlier maps.	The roadways shown as proposed appear to have residential properties surrounding them, either proposed or under construction.	Unlikely

Historical Ordnance Survey Map Interpretation				
Map Date	Scale	Features on site	Features in surrounding area	Significant Potential Contamination Sources
1967	1: 10, 000	Unchanged		
1974-1975	1: 2, 500	At this scale and orientation the site is shown as Works to the north. The southern half of the site is occupied by narrow rectangular shaped building. The access road into the site is shown as Kings Close.	The Hall is now shown as Village Hall. The houses shown as under construction or proposed to the south are shown as a series of semi-detached properties. The region to the west, originally shown as part of the brick yard is now shown as Woodlands and Caravan Park. The region of the former Brick Yard to the north is occupied by Downview Road & Downview Way with a series of residential properties with more proposed to the north. The field to the north, across the roadway (this section above the site now known as Main Road A20224) is the King George Field (recreation ground), with associated features.	Possibly Unlikely Unlikely Unlikely Unlikely
1978-1982	1: 2, 500	The site is unchanged.	Surrounding is predominantly unchanged, much residential infilling has taken place to south with a series of detached, semi-detached and terraced housing with associated access roads.	Unlikely
1980	1: 10, 000	At this scale and orientation the site and surrounding area appears predominantly unchanged.	Some additional glasshouses shown as Nurseries are shown to the north west. Some of the large works buildings to north east have disappeared. To the south east and east there are a number of trackways or lines shown which may represent an Aerodrome with runways, approximately 750m from the site.	Unlikely Unlikely Unlikely
1982-1989	1: 2, 500	The site is unchanged	Much of the surrounding area remains unchanged with the exception of some further residential infilling to the south west and east. The remaining section of the disused Canal to the north west has been replaced by The Pines with associated residential properties shown	Unlikely Possibly

Historical Ordnance Survey Map Interpretation				
Map Date	Scale	Features on site	Features in surrounding area	Significant Potential Contamination Sources
1984	!; 2, 500	The subject site and much of the surrounding area is not shown on this map. Only the very south east corner of the region is shown	-	Unlikely
1984-1989	1: 2, 500	Unchanged	Unchanged with the exception of a Community Centre shown in south west corner of recreation ground (King George's Field). A garage is shown to the north west, approximately 220m from the site, along Burndell Road.	Unlikely
1992	1: 10, 000	Unchanged	The industrial buildings to the north east have been replaced by residential properties and associated access roads, although some small square shaped industrial units have appeared to the north of this area, approximately 900-1km from the site. These are known as Ford Airfield Industrial Estate. To the east of these two rectangular shaped units are shown, labelled as Grain Store. The former farm to the south is now shown as a depot, this is approximately 750m from the site. To the extreme north, across the railway track at the very northern end of the map a series of large glasshouses are shown, to the north west of the site. To the north of the site, approximately 1.25km from the site a Sewage Pumping Station is shown.	Unlikely Unlikely Unlikely Unlikely
1994	1: 2, 500	The site is predominantly unchanged although the rectangular shaped feature on the western side is no longer shown.	The caravan park to the immediate west is shown with a series of rectangular shaped features around Woodlands Park access road. These may represent static caravans. The Village Hall to the immediate north is now shown with PO Post Office	Possibly Unlikely
1994-1995	1: 2, 500	Only the western section of the site is shown on this section of the map. This appears unchanged.	The sections that are shown on these pieces of the maps appear unchanged.	Unlikely

Historical Ordnance Survey Map Interpretation				
Map Date	Scale	Features on site	Features in surrounding area	Significant Potential Contamination Sources
2006	1: 10, 000	Unchanged	At this scale further development has taken place to the east in the Ford Airfield Industrial Estate	Unlikely
2013	1: 10, 000	Unchanged	Predominantly unchanged. An Air Riffle Range is shown to the extreme south east, approximately 950-1Km from the site.	Unlikely given the distance involved.

NOTE: Additional maps at 1:10,560 and 1:10000 scale of similar age have been obtained. These maps are appended but do not provide much additional information.

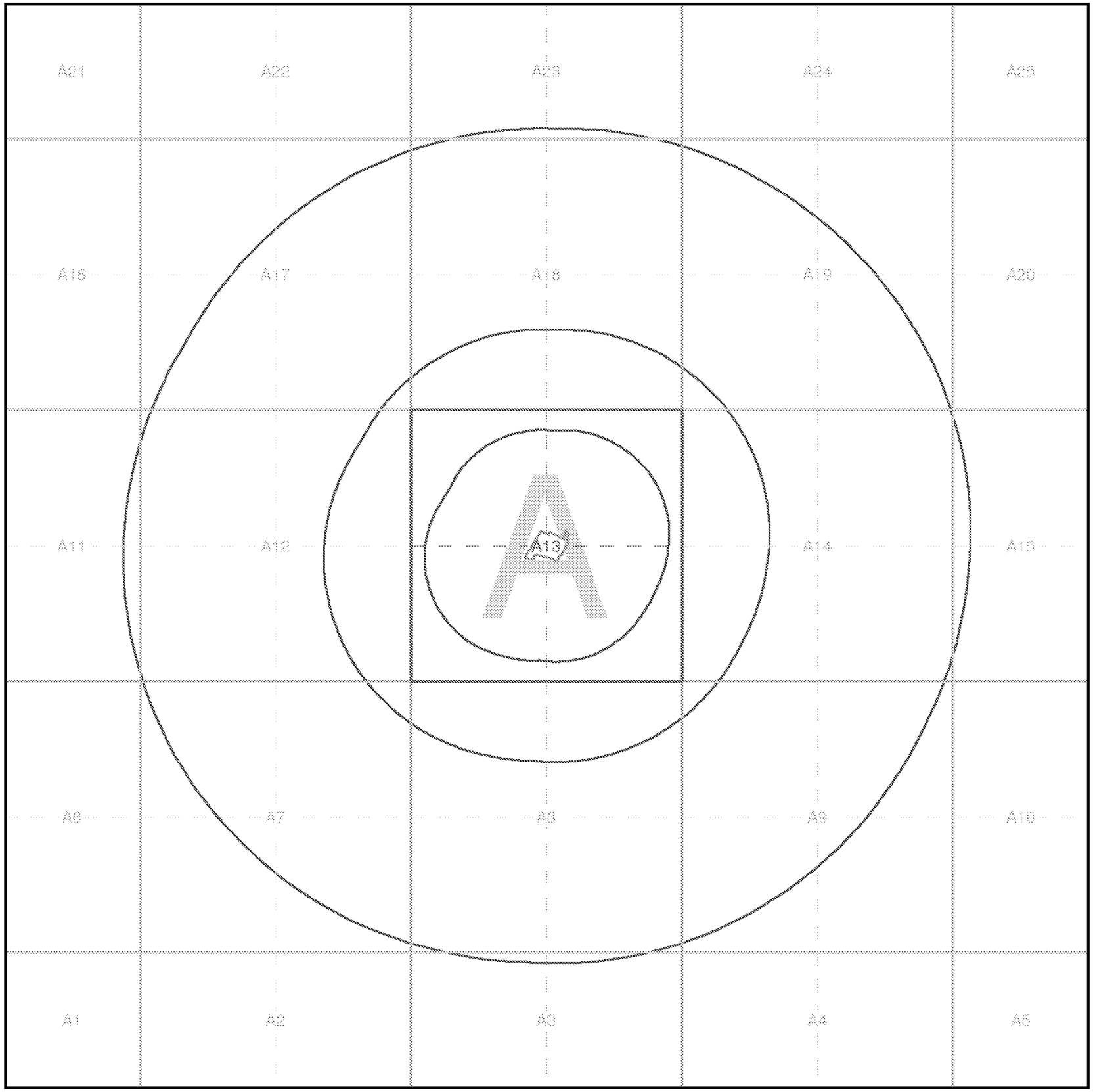

Southern Testing
Environmental & Geotechnical

Index Map

For ease of identification, your site and buffer have been split into Slices, Segments and Quadrants. These are illustrated on the Index Map opposite and explained further below.

Slice
Each slice represents a 1:10,000 plot area (2.7km x 2.7km) for your site and buffer. A large site and buffer may be made up of several slices (represented by a red outline), that are referenced by letters of the alphabet, starting from the bottom left corner of the slice "grid". This grid does not relate to National Grid lines but is designed to give best fit over the site and buffer.

Segment
A segment represents a 1:2,500 plot area. Segments that have plot files associated with them are shown in dark green, others in light blue. These are numbered from the bottom left hand corner within each slice.

Quadrant
A quadrant is a quarter of a segment. These are labelled as NW, NE, SW, SE and are referenced in the datasheet to allow features to be quickly located on plots. Therefore a feature that has a quadrant reference of A7NW will be in Slice A, Segment 7 and the NW Quadrant.

A selection of organisations who provide data within this report:

Ordnance Survey® Licensed Partner
British Geological Survey NATURAL ENVIRONMENT RESEARCH COUNCIL
Environment Agency
ENGLAND

Envirocheck reports are compiled from 136 different sources of data.

Client Details
MR D Spearman, Southern Testing, Keeble House, Stuart Way, East Grinstead, West Sussex, RH19 4QA

Order Details

Order Number:	50942437_1_1
Customer Ref:	DS2535 / SKT
National Grid Reference:	497970, 103090
Site Area (Ha):	0.5
Search Buffer (m):	1000

Site Details
Land West of Kings Close, Yapton, ARUNDEL, West Sussex, BN18 0EX

Full Terms and Conditions can be found on the following link:
http://www.landmarkinfo.co.uk/Terms/Show/515

Landmark Information Group
Tel: 0844 844 9952
Fax: 0844 844 9951
Web: www.envirocheck.co.uk

ARUN DISTRICT COUNCIL Y/22/14/

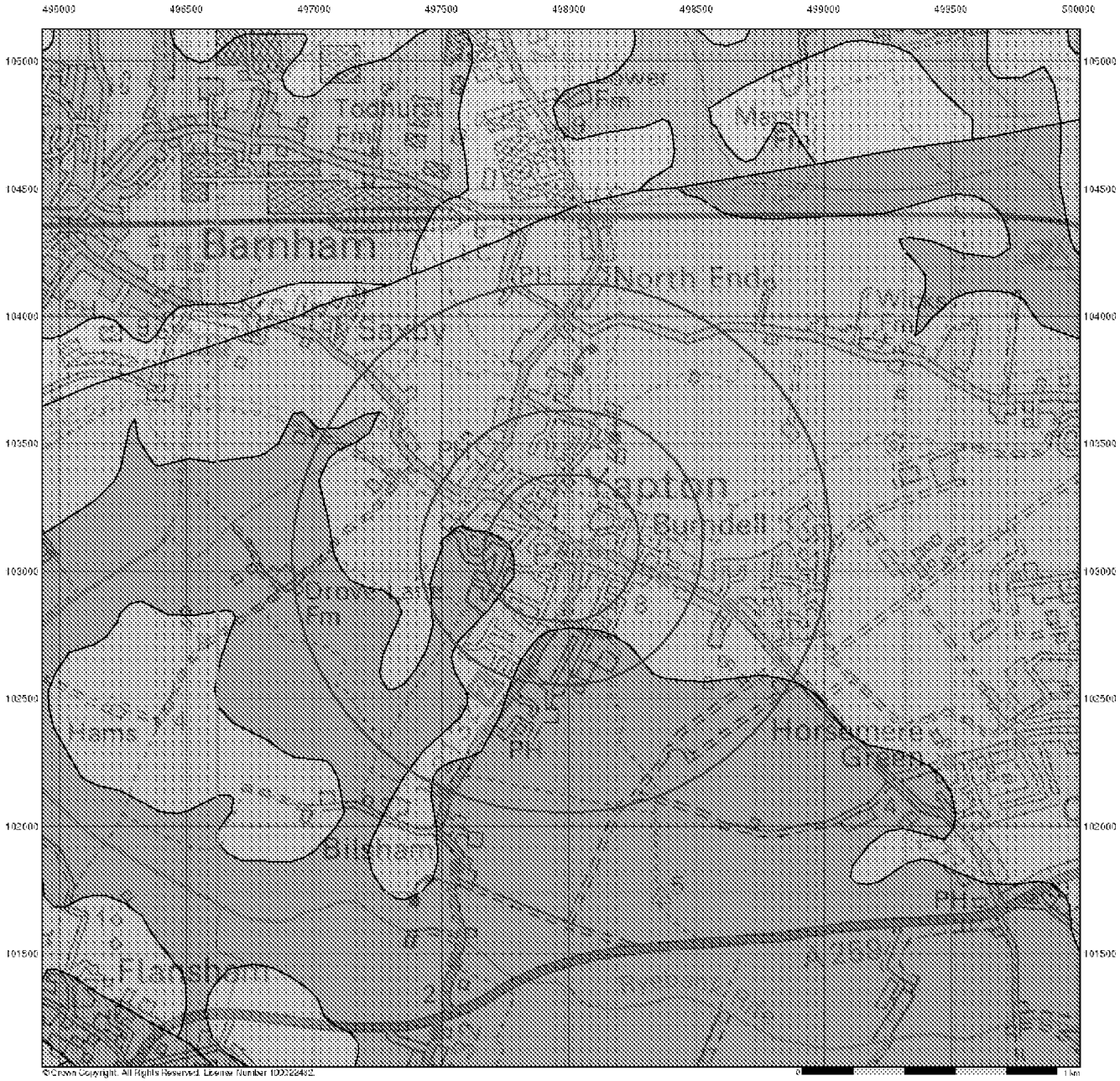

©Crown Copyright. All Rights Reserved. Licence Number 100022432.

Southern Testing
Environmental & Geotechnical

Groundwater Vulnerability

General

Specified Site | Specified Buffer(s) | Bearing Reference Point
Slice | Map ID

Agency and Hydrological

Geological Classes	Soil Classes
Major Aquifer (Highly Permeable)	High (H) 1, 2, 3, U
	Intermediate (I) 1, 2
	Low
Minor Aquifer (Variably Permeable)	High (H) 1, 2, 3, U
	Intermediate (I) 1, 2
	Low
Non Aquifer (Negligibly Permeable)	
Water or Sea	
Drift Deposit	

Site Sensitivity Context Map - Slice A

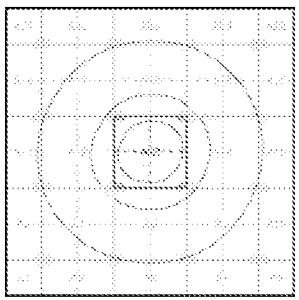

N

Order Details

Order Number:	50942437_1_1
Customer Ref:	DS2535 / SKT
National Grid Reference:	497970, 103090
Slice:	A
Site Area (Ha):	0.5
Search Buffer (m):	1000

Site Details

Land West of Kings Close, Yapton, ARUNDEL, West Sussex, BN18 0EX

Landmark
Tel: 0844 844 9952
Fax: 0844 844 9951
Web: www.envirocheck.co.uk

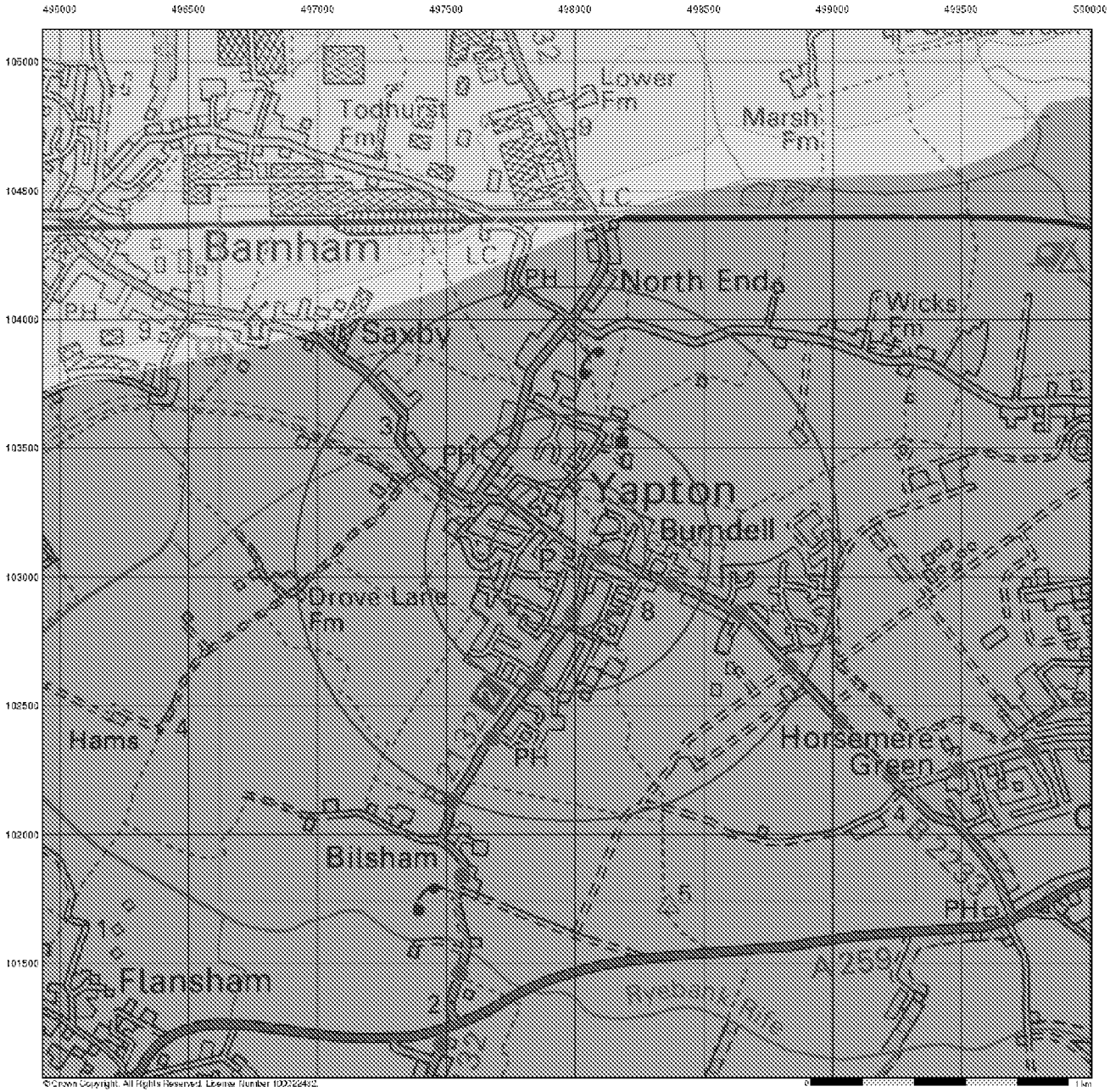

©Crown Copyright. All Rights Reserved. Licence Number 100022432.

Southern Testing
Environmental & Geotechnical

Bedrock Aquifer Designation

General

Specified Site
Specified Buffer(s)
Bearing Reference Point
Slice
Map ID

Agency and Hydrological

Geological Classes

Principal Aquifer

Secondary A Aquifer

Secondary B Aquifer

Secondary Undifferentiated

Unproductive Strata

Unknown

Site Sensitivity Context Map - Slice A

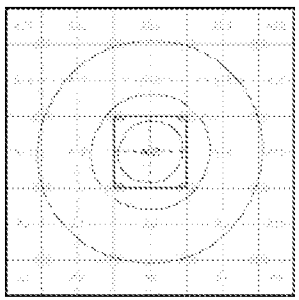

Order Details

Order Number:	50942437_1_1
Customer Ref:	DS2535 / SKT
National Grid Reference:	497970, 103090
Slice:	A
Site Area (Ha):	0.5
Search Buffer (m):	1000

Site Details

Land West of Kings Close, Yapton, ARUNDEL, West Sussex, BN18 0EX

Landmark
Tel: 0844 844 9952
Fax: 0844 844 9951
Web: www.envirocheck.co.uk

Southern Testing
Environmental & Geotechnical

Superficial Aquifer Designation

General

Specified Site | Specified Buffer(s) | Bearing Reference Point
Slice | Map ID

Agency and Hydrological

Geological Classes

- Principal Aquifer
- Secondary A Aquifer
- Secondary B Aquifer
- Secondary Undifferentiated
- Unproductive Strata
- Unknown

Site Sensitivity Context Map - Slice A

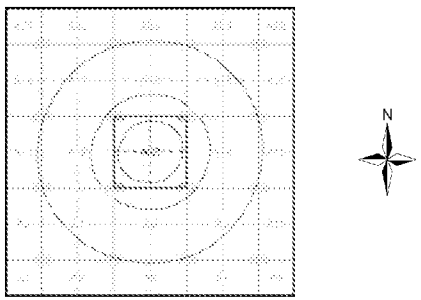

Order Details

Order Number:	50942437_1_1
Customer Ref:	DS2535 / SKT
National Grid Reference:	497970, 103090
Slice:	A
Site Area (Ha):	0.5
Search Buffer (m):	1000

Site Details

Land West of Kings Close, Yapton, ARUNDEL, West Sussex, BN18 0EX

Landmark Information Group

Tel: 0844 844 9952
Fax: 0844 844 9951
Web: www.envirocheck.co.uk

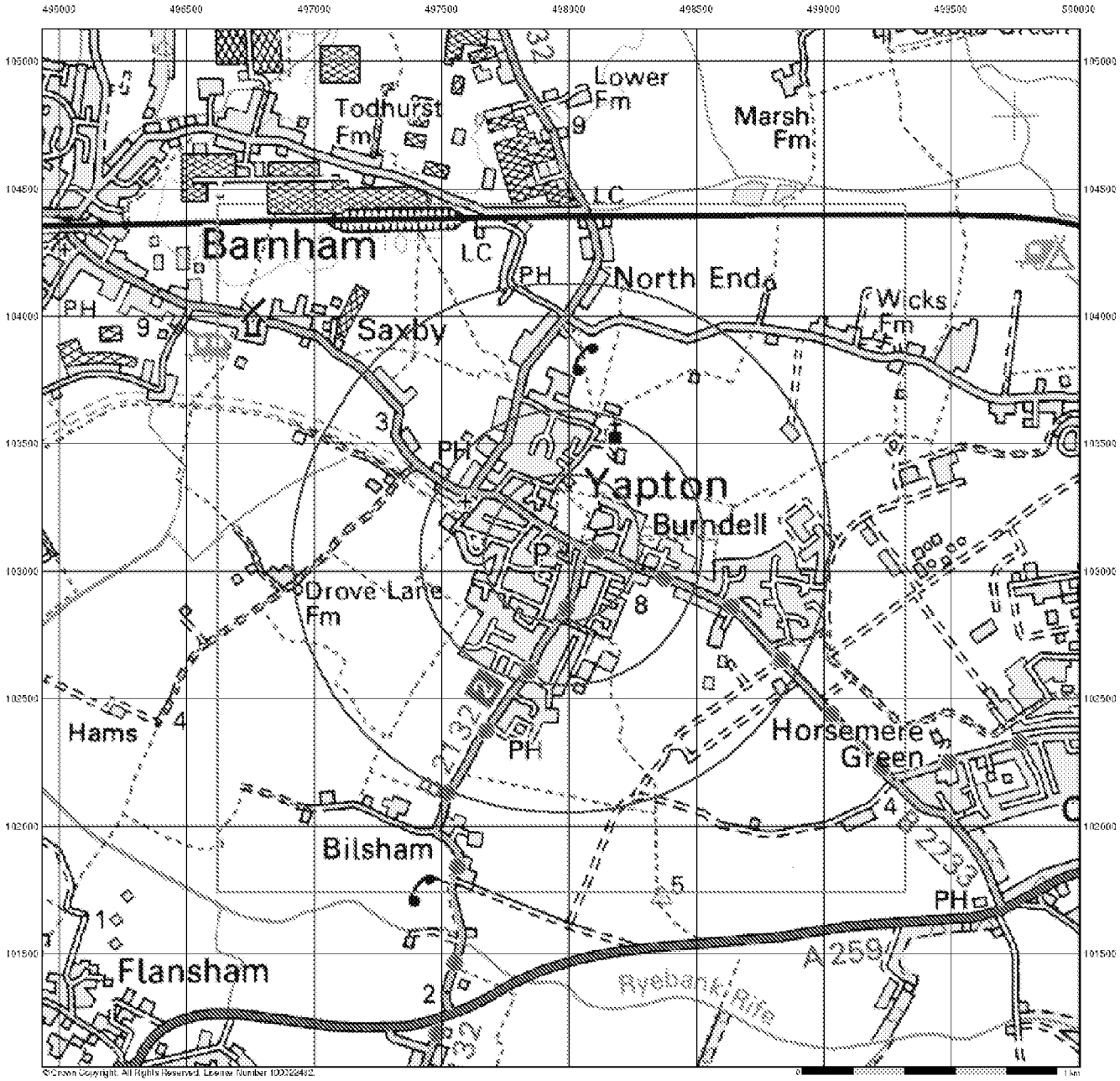

Southern Testing
Environmental & Geotechnical

Source Protection Zones

General

Specified Site
Specified Buffer(s)
Bearing Reference Point
Slice
Map ID

Agency and Hydrological

Source Protection Zone I
Source Protection Zone II
Source Protection Zone III
Zone of Special Interest
Source Protection Zone Borehole

Site Sensitivity Context Map - Slice A

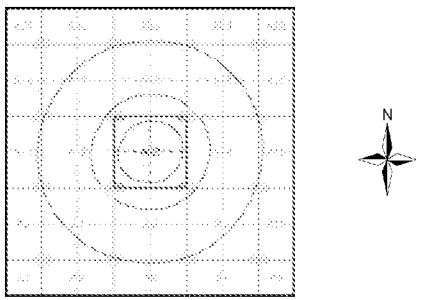

Order Details

Order Number:	50942437_1_1
Customer Ref:	DS2535 / SKT
National Grid Reference:	497970, 103090
Slice:	A
Site Area (Ha):	0.5
Search Buffer (m):	1000

Site Details

Land West of Kings Close, Yapton, ARUNDEL, West Sussex, BN18 0EX

Landmark
Tel: 0844 844 9952
Fax: 0844 844 9951
Web: www.envirocheck.co.uk

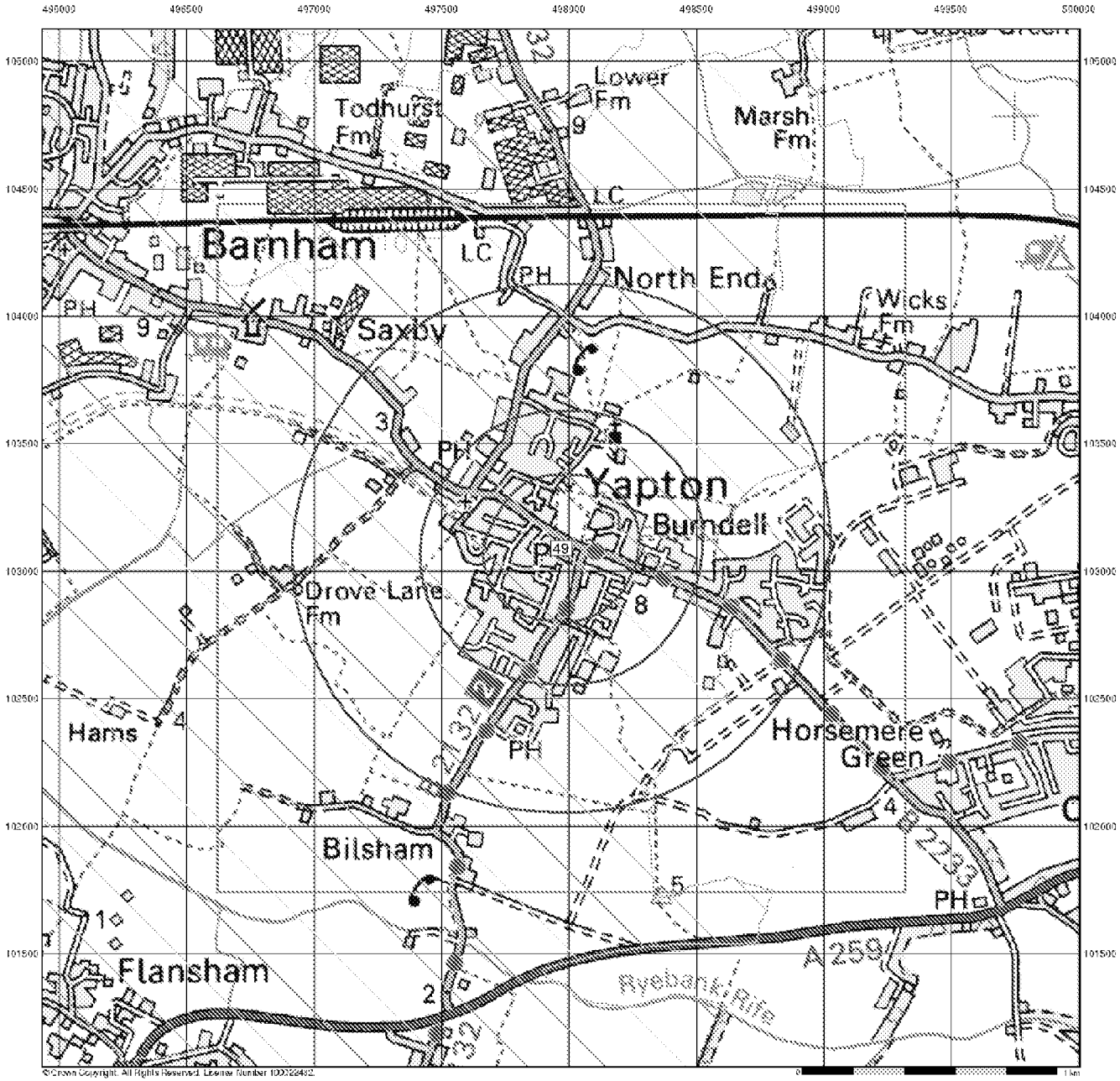

©Crown Copyright. All Rights Reserved. License Number 100022432.

Southern Testing
Environmental & Geotechnical

Sensitive Land Uses

General

Specified Site
Specified Buffer(s)
Bearing Reference Point
Slice
Map ID

Sensitive Land Uses

- Area of Adopted Green Belt
- Area of Unadopted Green Belt
- Area of Outstanding Natural Beauty
- Environmentally Sensitive Area
- Forest Park
- Local Nature Reserve
- Marine Nature Reserve
- National Nature Reserve
- National Park
- Nitrate Sensitive Area
- Nitrate Vulnerable Zone
- Ramsar Site
- Site of Special Scientific Interest
- Special Area of Conservation
- Special Protection Area

Site Sensitivity Context Map - Slice A

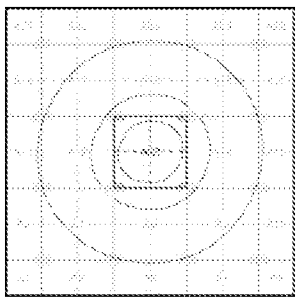

N

Order Details

Order Number:	50942437_1_1
Customer Ref:	DS2535 / SKT
National Grid Reference:	497970, 103090
Slice:	A
Site Area (Ha):	0.5
Search Buffer (m):	1000

Site Details

Land West of Kings Close, Yapton, ARUNDEL, West Sussex, BN18 0EX

Landmark

Tel: 0844 844 9952
Fax: 0844 844 9951
Web: www.envirocheck.co.uk

Historical Mapping Legends

Ordnance Survey County Series 1:10,560

- Gravel Pit
- Sand Pit
- Other Pits
- Quarry
- Shingle
- Orchard
- Osiers
- Reeds
- Marsh
- Mixed Wood
- Deciduous
- Brushwood
- Fir
- Furze
- Rough Pasture
- Arrow denotes flow of water
- Trigonometrical Station
- Site of Antiquities
- Bench Mark
- Pump, Guide Post, Signal Post
- Well, Spring, Boundary Post
- ·285 Surface Level
- Sketched Contour
- Instrumental Contour
- Main Roads (Fenced / Un-Fenced)
- Minor Roads (Fenced / Un-Fenced)
- Sunken Road
- Raised Road
- Road over Railway
- Railway over River
- Railway over Road
- Level Crossing
- Road over River or Canal
- Road over Stream
- Road over Stream
- County Boundary (Geographical)
- County & Civil Parish Boundary
- Administrative County & Civil Parish Boundary
- Co. Boro. Bdy. County Borough Boundary (England)
- Co. Burgh Bdy. County Burgh Boundary (Scotland)
- R.D. Bdy. Rural District Boundary
- Civil Parish Boundary

Ordnance Survey Plan 1:10,000

- Chalk Pit, Clay Pit or Quarry
- Gravel Pit
- Sand Pit
- Disused Pit or Quarry
- Refuse or Slag Heap
- Lake, Loch or Pond
- Dunes
- Boulders
- Coniferous Trees
- Non-Coniferous Trees
- Orchard
- Scrub
- Coppice
- Bracken
- Heath
- Rough Grassland
- Marsh
- Reeds
- Saltings
- Building
- Direction of Flow of Water: Shingle, Sand
- Glasshouse
- Pylon
- Sloping Masonry
- Pole
- Electricity Transmission Line
- Cutting
- Embankment
- Standard Gauge Multiple Track
- Road Under
- Road Over
- Level Crossing
- Foot Bridge
- Standard Gauge Single Track
- Siding, Tramway or Mineral Line
- Narrow Gauge
- Geographical County
- Administrative County, County Borough or County of City
- Municipal Borough, Urban or Rural District, Burgh or District Council
- Borough, Burgh or County Constituency — Shown only when not coincident with other boundaries
- Civil Parish — Shown alternately when coincidence of boundaries occurs

BP, BS	Boundary Post or Stone	Pol Sta	Police Station
Ch	Church	PO	Post Office
CH	Club House	PC	Public Convenience
F E Sta	Fire Engine Station	PH	Public House
FB	Foot Bridge	SB	Signal Box
Fn	Fountain	Spr	Spring
GP	Guide Post	TCB	Telephone Call Box
MP	Mile Post	TCP	Telephone Call Post
MS	Mile Stone	W	Well

1:10,000 Raster Mapping

- Gravel Pit
- Refuse tip or slag heap
- Rock
- Rock (scattered)
- Boulders
- Boulders (scattered)
- Shingle
- Mud
- Sand
- Sand Pit
- Slopes
- Top of cliff
- General detail
- Underground detail
- Overhead detail
- Narrow gauge railway
- Multi-track railway
- Single track railway
- County boundary (England only)
- Civil, parish or community boundary
- District, Unitary, Metropolitan, London Borough boundary
- Constituency boundary
- Area of wooded vegetation
- Non-coniferous trees
- Non-coniferous trees (scattered)
- Coniferous trees
- Coniferous trees (scattered)
- Positioned tree
- Orchard
- Coppice or Osiers
- Rough Grassland
- Heath
- Scrub
- Marsh, Salt Marsh or Reeds
- Water feature
- Flow arrows
- Mean high water (springs)
- Mean low water (springs)
- Telephone line (where shown)
- Electricity transmission line (with poles)
- BM 123.45 m Bench mark (where shown)
- Triangulation station
- Point feature (e.g. Guide Post or Mile Stone)
- Pylon, flare stack or lighting tower
- Site of (antiquity)
- Glasshouse
- General Building
- Important Building

Southern Testing
Environmental & Geotechnical

Historical Mapping & Photography included:

Mapping Type	Scale	Date	Pg
Sussex	1:10,560	1880	2
Sussex	1:10,560	1899	3
Sussex	1:10,560	1913	4
Sussex	1:10,560	1913	5
Sussex	1:10,560	1913	6
Historical Aerial Photography	1:10,560	1947	7
Sussex	1:10,560	1951	8
Ordnance Survey Plan	1:10,000	1962	9
Ordnance Survey Plan	1:10,000	1967	10
Ordnance Survey Plan	1:10,000	1980	11
Ordnance Survey Plan	1:10,000	1992	12
10K Raster Mapping	1:10,000	2006	13
10K Raster Mapping	1:10,000	2013	14

Historical Map - Slice A

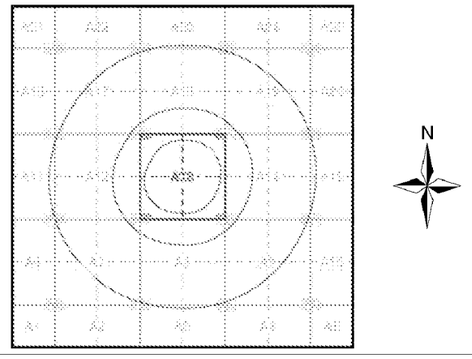

Order Details

Order Number: 50942437_1_1
Customer Ref: DS2535 / SKT
National Grid Reference: 497970, 103090
Slice: A
Site Area (Ha): 0.5
Search Buffer (m): 1000

Site Details

Land West of Kings Close, Yapton, ARUNDEL, West Sussex, BN18 0EX

Landmark Information Group
Tel: 0844 844 9952
Fax: 0844 844 9951
Web: www.envirocheck.co.uk

ARUN DISTRICT COUNCIL Y/22/14/

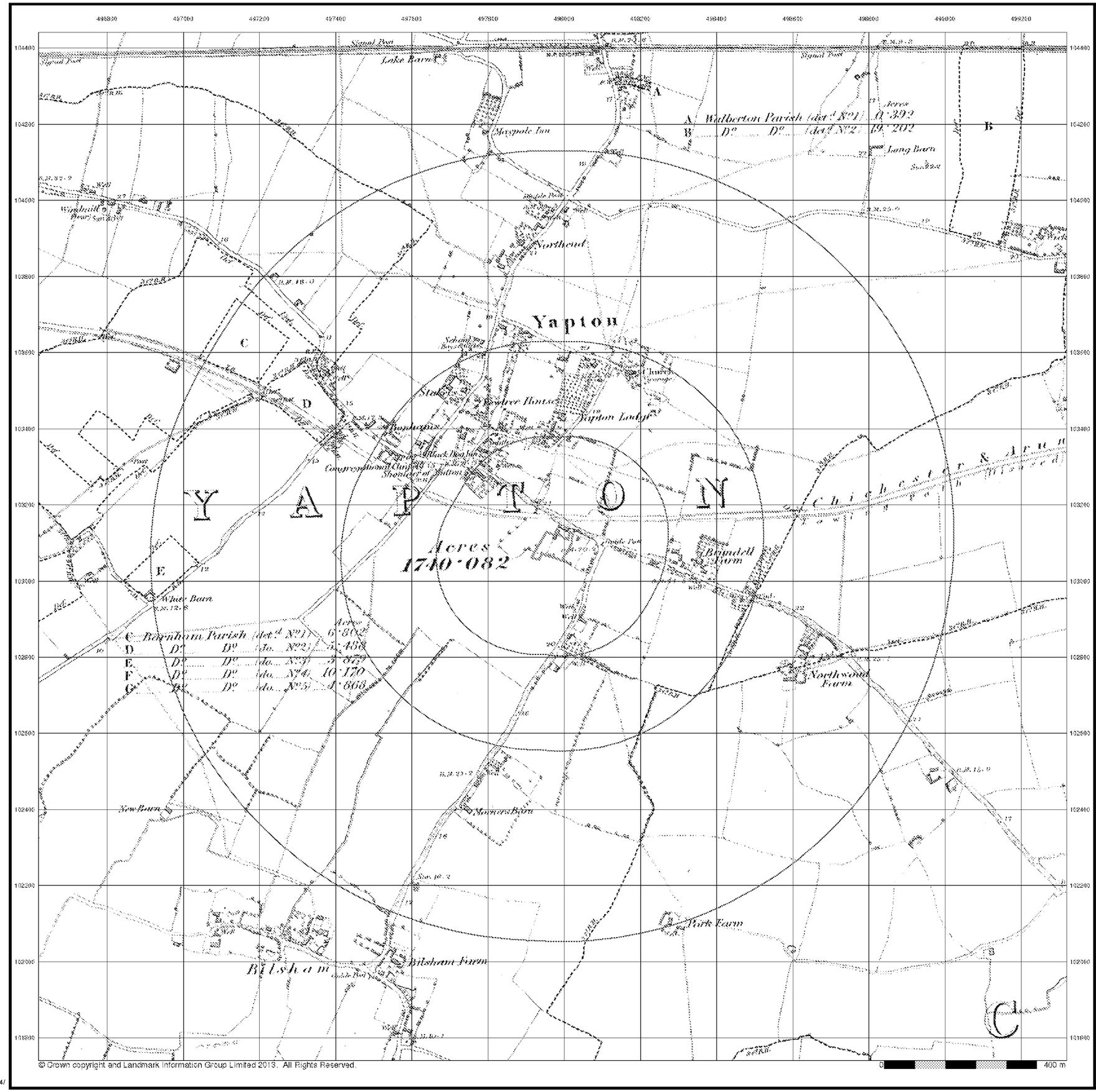

© Crown copyright and Landmark Information Group Limited 2013. All Rights Reserved.

0 400 m

Southern Testing
Environmental & Geotechnical

Sussex

Published 1880

Source map scale - 1:10,560

The historical maps shown were reproduced from maps predominantly held at the scale adopted for England, Wales and Scotland in the 1840`s. In 1854 the 1:2,500 scale was adopted for mapping urban areas; these maps were used to update the 1:10,560 maps. The published date given therefore is often some years later than the surveyed date. Before 1938, all OS maps were based on the Cassini Projection, with independent surveys of a single county or group of counties, giving rise to significant inaccuracies in outlying areas. In the late 1940`s, a Provisional Edition was produced, which updated the 1:10,560 mapping from a number of sources. The maps appear unfinished - with all military camps and other strategic sites removed. These maps were initially overprinted with the National Grid. In 1970, the first 1:10,000 maps were produced using the Transverse Mercator Projection. The revision process continued until recently, with new editions appearing every 10 years or so for urban areas.

Map Name(s) and Date(s)

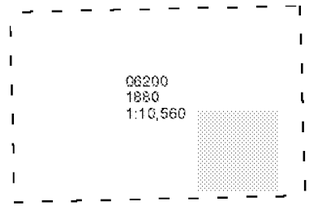

Historical Map - Slice A

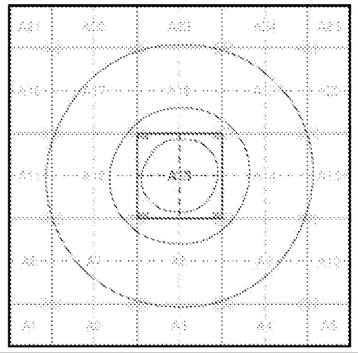

N

Order Details

Order Number:	50942437_1_1
Customer Ref:	DS2535 / SKT
National Grid Reference:	497970, 103090
Slice:	A
Site Area (Ha):	0.5
Search Buffer (m):	1000

Site Details

Land West of Kings Close, Yapton, ARUNDEL, West Sussex, BN18 0EX

Landmark Information Group
Tel: 0844 844 9952
Fax: 0844 844 9951
Web: www.envirocheck.co.uk

ARUN DISTRICT COUNCIL Y/22/14/

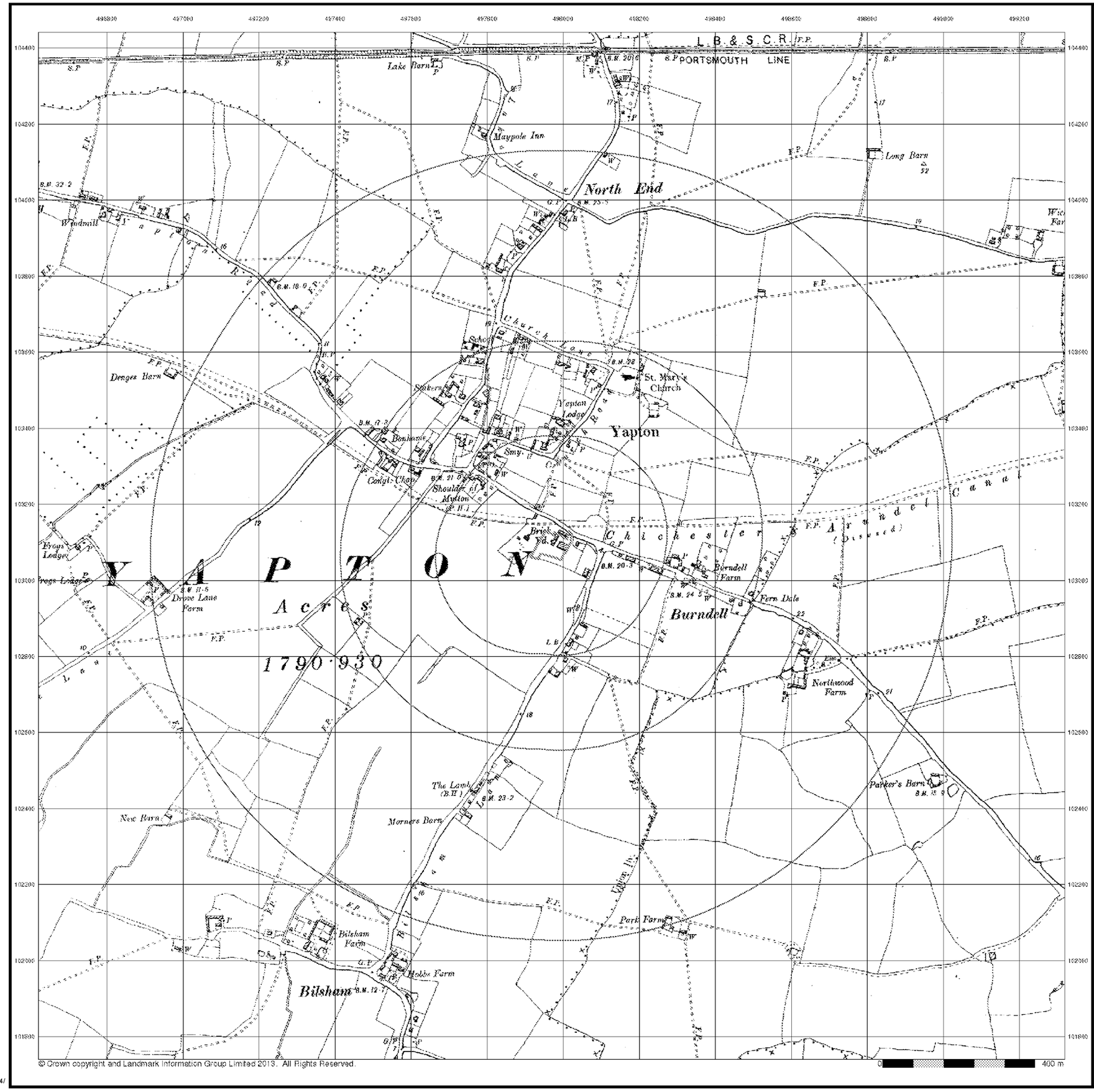

© Crown copyright and Landmark Information Group Limited 2013. All Rights Reserved.

Southern Testing
Environmental & Geotechnical

Sussex

Published 1899

Source map scale - 1:10,560

The historical maps shown were reproduced from maps predominantly held at the scale adopted for England, Wales and Scotland in the 1840`s. In 1854 the 1:2,500 scale was adopted for mapping urban areas; these maps were used to update the 1:10,560 maps. The published date given therefore is often some years later than the surveyed date. Before 1938, all OS maps were based on the Cassini Projection, with independent surveys of a single county or group of counties, giving rise to significant inaccuracies in outlying areas. In the late 1940`s, a Provisional Edition was produced, which updated the 1:10,560 mapping from a number of sources. The maps appear unfinished - with all military camps and other strategic sites removed. These maps were initially overprinted with the National Grid. In 1970, the first 1:10,000 maps were produced using the Transverse Mercator Projection. The revision process continued until recently, with new editions appearing every 10 years or so for urban areas.

Map Name(s) and Date(s)

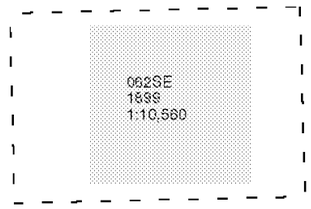

Historical Map - Slice A

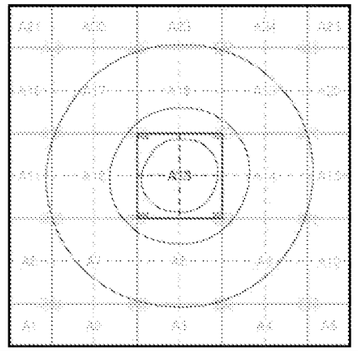

N

Order Details

Order Number:	50942437_1_1
Customer Ref:	DS2535 / SKT
National Grid Reference:	497970, 103090
Slice:	A
Site Area (Ha):	0.5
Search Buffer (m):	1000

Site Details

Land West of Kings Close, Yapton, ARUNDEL, West Sussex, BN18 0EX

Landmark Information Group

Tel: 0844 844 9952
Fax: 0844 844 9951
Web: www.envirocheck.co.uk

ARUN DISTRICT COUNCIL Y/22/14/

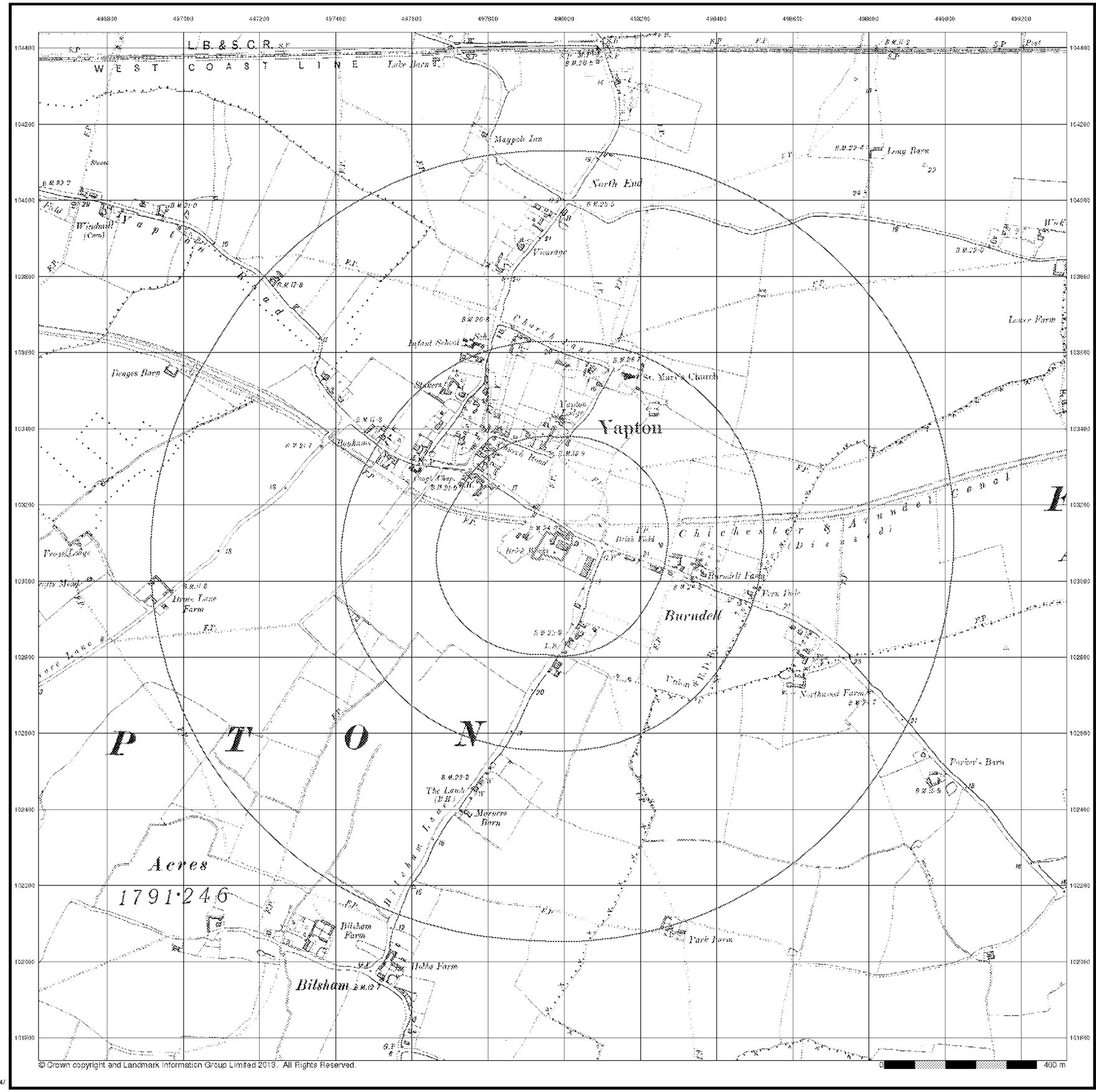

© Crown copyright and Landmark Information Group Limited 2013. All Rights Reserved.

Southern Testing
Environmental & Geotechnical

Sussex

Published 1913

Source map scale - 1:10,560

The historical maps shown were reproduced from maps predominantly held at the scale adopted for England, Wales and Scotland in the 1840`s. In 1854 the 1:2,500 scale was adopted for mapping urban areas; these maps were used to update the 1:10,560 maps. The published date given therefore is often some years later than the surveyed date. Before 1938, all OS maps were based on the Cassini Projection, with independent surveys of a single county or group of counties, giving rise to significant inaccuracies in outlying areas. In the late 1940`s, a Provisional Edition was produced, which updated the 1:10,560 mapping from a number of sources. The maps appear unfinished - with all military camps and other strategic sites removed. These maps were initially overprinted with the National Grid. In 1970, the first 1:10,000 maps were produced using the Transverse Mercator Projection. The revision process continued until recently, with new editions appearing every 10 years or so for urban areas.

Map Name(s) and Date(s)

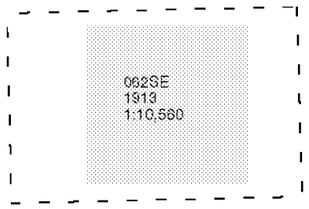

Historical Map - Slice A

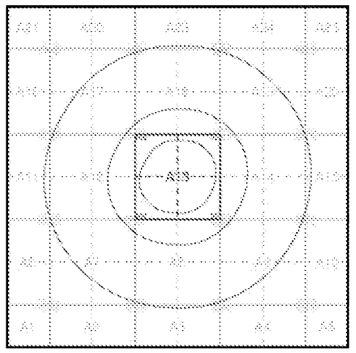

N

Order Details

Order Number:	50942437_1_1
Customer Ref:	DS2535 / SKT
National Grid Reference:	497970, 103090
Slice:	A
Site Area (Ha):	0.5
Search Buffer (m):	1000

Site Details

Land West of Kings Close, Yapton, ARUNDEL, West Sussex, BN18 0EX

Landmark Information Group
Tel: 0844 844 9952
Fax: 0844 844 9951
Web: www.envirocheck.co.uk

ARUN DISTRICT COUNCIL Y/22/14/

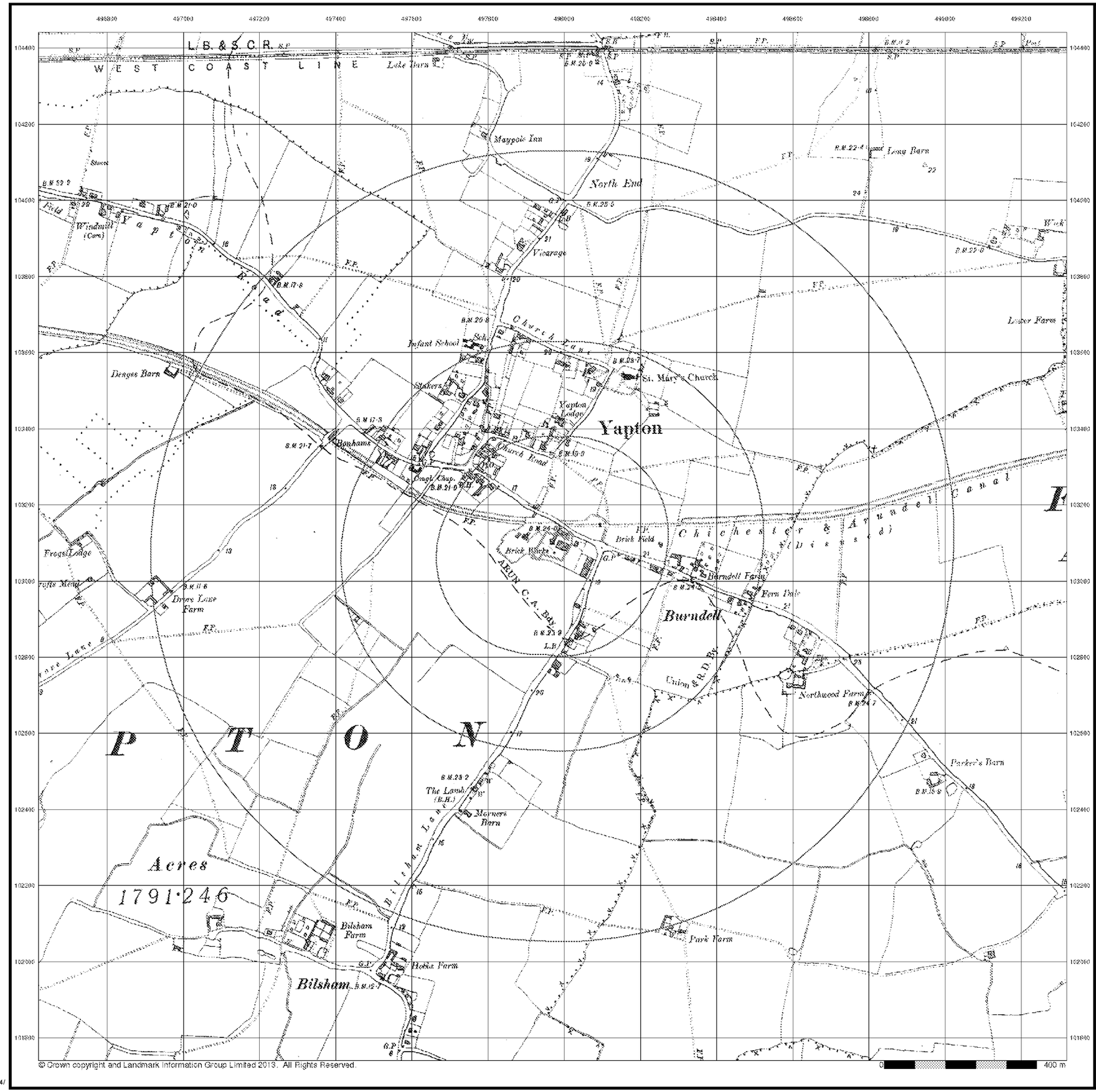

© Crown copyright and Landmark Information Group Limited 2013. All Rights Reserved.

Southern Testing
Environmental & Geotechnical

Sussex

Published 1913

Source map scale - 1:10,560

The historical maps shown were reproduced from maps predominantly held at the scale adopted for England, Wales and Scotland in the 1840`s. In 1854 the 1:2,500 scale was adopted for mapping urban areas; these maps were used to update the 1:10,560 maps. The published date given therefore is often some years later than the surveyed date. Before 1938, all OS maps were based on the Cassini Projection, with independent surveys of a single county or group of counties, giving rise to significant inaccuracies in outlying areas. In the late 1940`s, a Provisional Edition was produced, which updated the 1:10,560 mapping from a number of sources. The maps appear unfinished - with all military camps and other strategic sites removed. These maps were initially overprinted with the National Grid. In 1970, the first 1:10,000 maps were produced using the Transverse Mercator Projection. The revision process continued until recently, with new editions appearing every 10 years or so for urban areas.

Map Name(s) and Date(s)

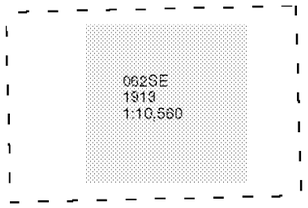

Historical Map - Slice A

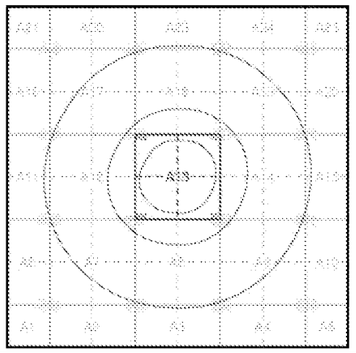

Order Details

Order Number:	50942437_1_1
Customer Ref:	DS2535 / SKT
National Grid Reference:	497970, 103090
Slice:	A
Site Area (Ha):	0.5
Search Buffer (m):	1000

Site Details

Land West of Kings Close, Yapton, ARUNDEL, West Sussex, BN18 0EX

Landmark Information Group
Tel: 0844 844 9952
Fax: 0844 844 9951
Web: www.envirocheck.co.uk

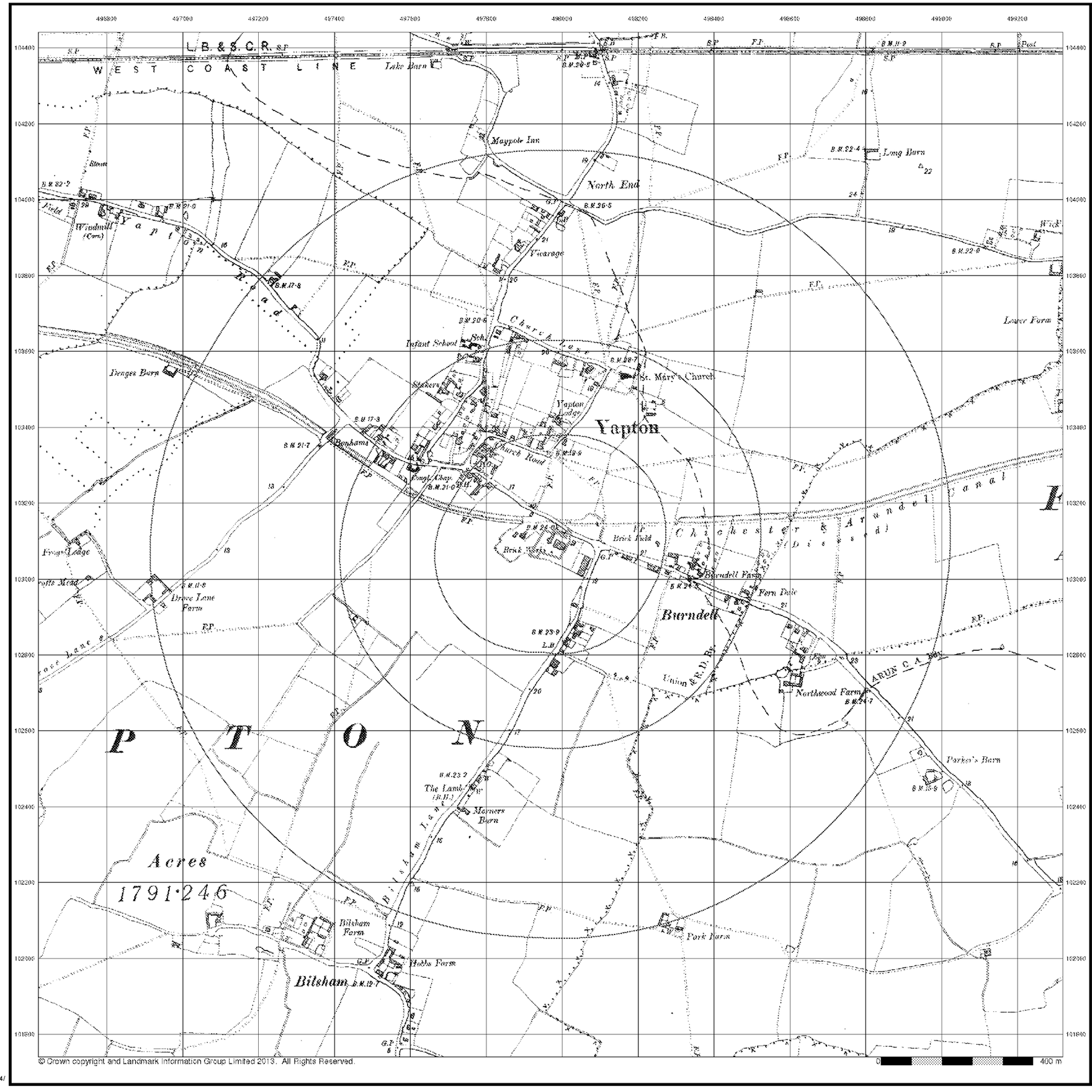

© Crown copyright and Landmark Information Group Limited 2013. All Rights Reserved.

Southern Testing
Environmental & Geotechnical

Sussex

Published 1913

Source map scale - 1:10,560

The historical maps shown were reproduced from maps predominantly held at the scale adopted for England, Wales and Scotland in the 1840`s. In 1854 the 1:2,500 scale was adopted for mapping urban areas; these maps were used to update the 1:10,560 maps. The published date given therefore is often some years later than the surveyed date. Before 1938, all OS maps were based on the Cassini Projection, with independent surveys of a single county or group of counties, giving rise to significant inaccuracies in outlying areas. In the late 1940`s, a Provisional Edition was produced, which updated the 1:10,560 mapping from a number of sources. The maps appear unfinished - with all military camps and other strategic sites removed. These maps were initially overprinted with the National Grid. In 1970, the first 1:10,000 maps were produced using the Transverse Mercator Projection. The revision process continued until recently, with new editions appearing every 10 years or so for urban areas.

Map Name(s) and Date(s)

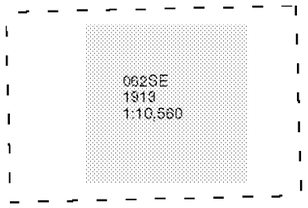

Historical Map - Slice A

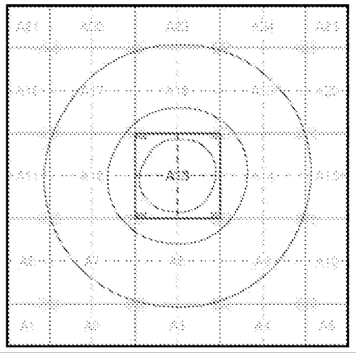

Order Details

Order Number:	50942437_1_1
Customer Ref:	DS2535 / SKT
National Grid Reference:	497970, 103090
Slice:	A
Site Area (Ha):	0.5
Search Buffer (m):	1000

Site Details

Land West of Kings Close, Yapton, ARUNDEL, West Sussex, BN18 0EX

Landmark Information Group
Tel: 0844 844 9952
Fax: 0844 844 9951
Web: www.envirocheck.co.uk

ARUN DISTRICT COUNCIL Y/22/14/

© Landmark Information Group and/or Data Suppliers 2013.

Southern Testing
Environmental & Geotechnical

Historical Aerial Photography

Published 1947

Source map scale - 1:10,560

The Historical Aerial Photos were produced by the Ordnance Survey at a scale of 1:1,250 and 1:10,560 from Air Force photography. They were produced between 1944 and 1951 as an interim measure, pending preparation of conventional mapping, due to post war resource shortages. New security measures in the 1950's meant that every photograph was re-checked for potentially unsafe information with security sites replaced by fake fields or clouds. The original editions were withdrawn and only later made available after a period of fifty years although due to the accuracy of the editing, without viewing both revisions it is not easy to spot the edits. Where available Landmark have included both revisions.

© Landmark Information Group and/or Data Suppliers 2010.

Map Name(s) and Date(s)

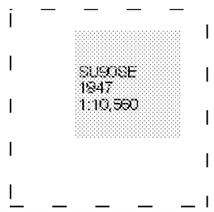

Historical Aerial Photography - Slice A

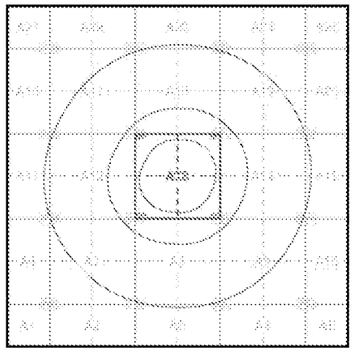

N

LIBRARY RESULTS

Order Details

Order Number:	50942437_1_1
Customer Ref:	DS2535 / SKT
National Grid Reference:	497970, 103090
Slice:	A
Site Area (Ha):	0.5
Search Buffer (m):	1000

Site Details

Land West of Kings Close, Yapton, ARUNDEL, West Sussex, BN18 0EX

Landmark Information Group

Tel: 0844 844 9952
Fax: 0844 844 9951
Web: www.envirocheck.co.uk

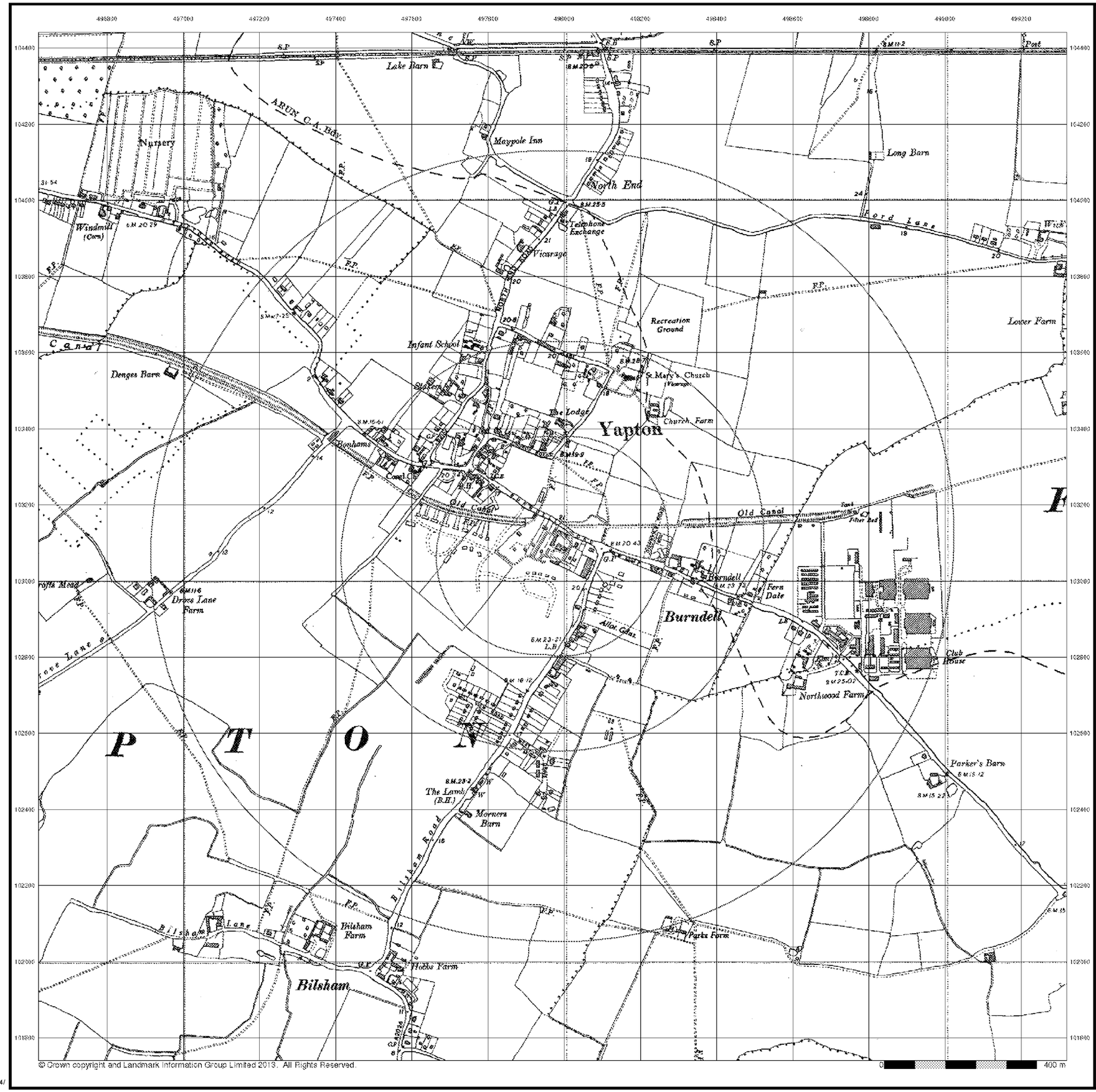

Southern Testing
Environmental & Geotechnical

Sussex

Published 1951

Source map scale - 1:10,560

The historical maps shown were reproduced from maps predominantly held at the scale adopted for England, Wales and Scotland in the 1840`s. In 1854 the 1:2,500 scale was adopted for mapping urban areas; these maps were used to update the 1:10,560 maps. The published date given therefore is often some years later than the surveyed date. Before 1938, all OS maps were based on the Cassini Projection, with independent surveys of a single county or group of counties, giving rise to significant inaccuracies in outlying areas. In the late 1940`s, a Provisional Edition was produced, which updated the 1:10,560 mapping from a number of sources. The maps appear unfinished - with all military camps and other strategic sites removed. These maps were initially overprinted with the National Grid. In 1970, the first 1:10,000 maps were produced using the Transverse Mercator Projection. The revision process continued until recently, with new editions appearing every 10 years or so for urban areas.

Map Name(s) and Date(s)

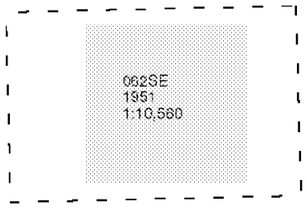

Historical Map - Slice A

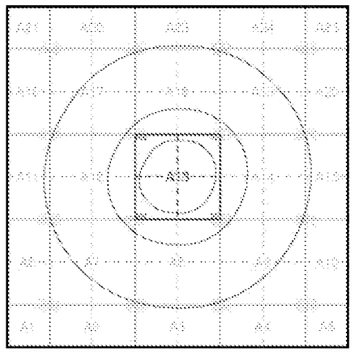

N

Order Details

Order Number:	50942437_1_1
Customer Ref:	DS2535 / SKT
National Grid Reference:	497970, 103090
Slice:	A
Site Area (Ha):	0.5
Search Buffer (m):	1000

Site Details

Land West of Kings Close, Yapton, ARUNDEL, West Sussex, BN18 0EX

Landmark Information Group
Tel: 0844 844 9952
Fax: 0844 844 9951
Web: www.envirocheck.co.uk

ARUN DISTRICT COUNCIL Y/22/14/

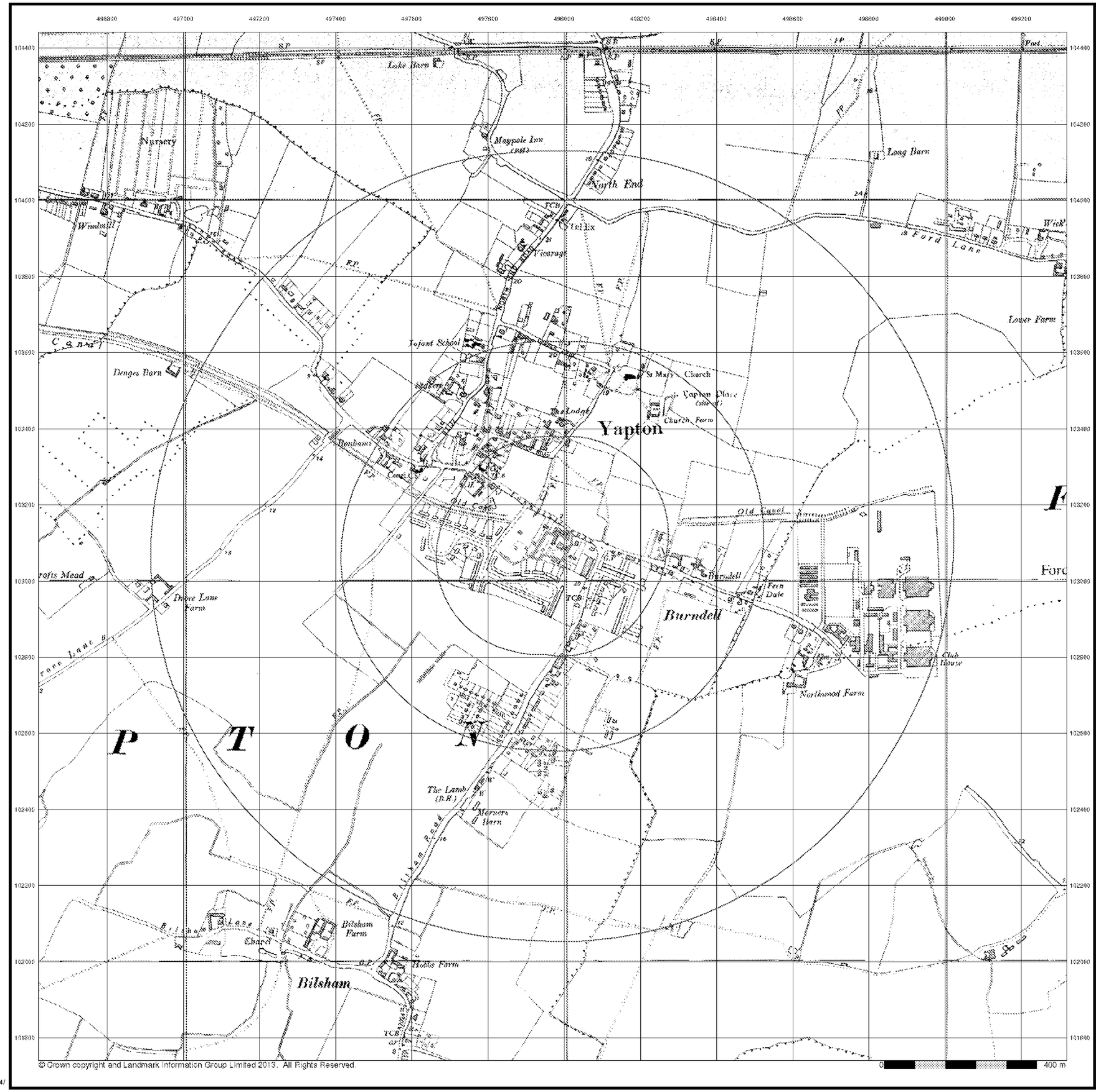

© Crown copyright and Landmark Information Group Limited 2013. All Rights Reserved.

0 400 m

Southern Testing
Environmental & Geotechnical

Ordnance Survey Plan

Published 1962

Source map scale - 1:10,000

The historical maps shown were reproduced from maps predominantly held at the scale adopted for England, Wales and Scotland in the 1840`s. In 1854 the 1:2,500 scale was adopted for mapping urban areas; these maps were used to update the 1:10,560 maps. The published date given therefore is often some years later than the surveyed date. Before 1938, all OS maps were based on the Cassini Projection, with independent surveys of a single county or group of counties, giving rise to significant inaccuracies in outlying areas. In the late 1940`s, a Provisional Edition was produced, which updated the 1:10,560 mapping from a number of sources. The maps appear unfinished - with all military camps and other strategic sites removed. These maps were initially overprinted with the National Grid. In 1970, the first 1:10,000 maps were produced using the Transverse Mercator Projection. The revision process continued until recently, with new editions appearing every 10 years or so for urban areas.

Map Name(s) and Date(s)

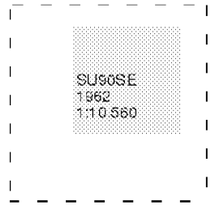

Historical Map - Slice A

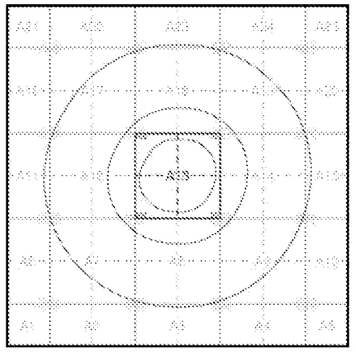

N

Order Details

Order Number:	50942437_1_1
Customer Ref:	DS2535 / SKT
National Grid Reference:	497970, 103090
Slice:	A
Site Area (Ha):	0.5
Search Buffer (m):	1000

Site Details

Land West of Kings Close, Yapton, ARUNDEL, West Sussex, BN18 0EX

Landmark Information Group
Tel: 0844 844 9952
Fax: 0844 844 9951
Web: www.envirocheck.co.uk

ARUN DISTRICT COUNCIL Y/22/14/

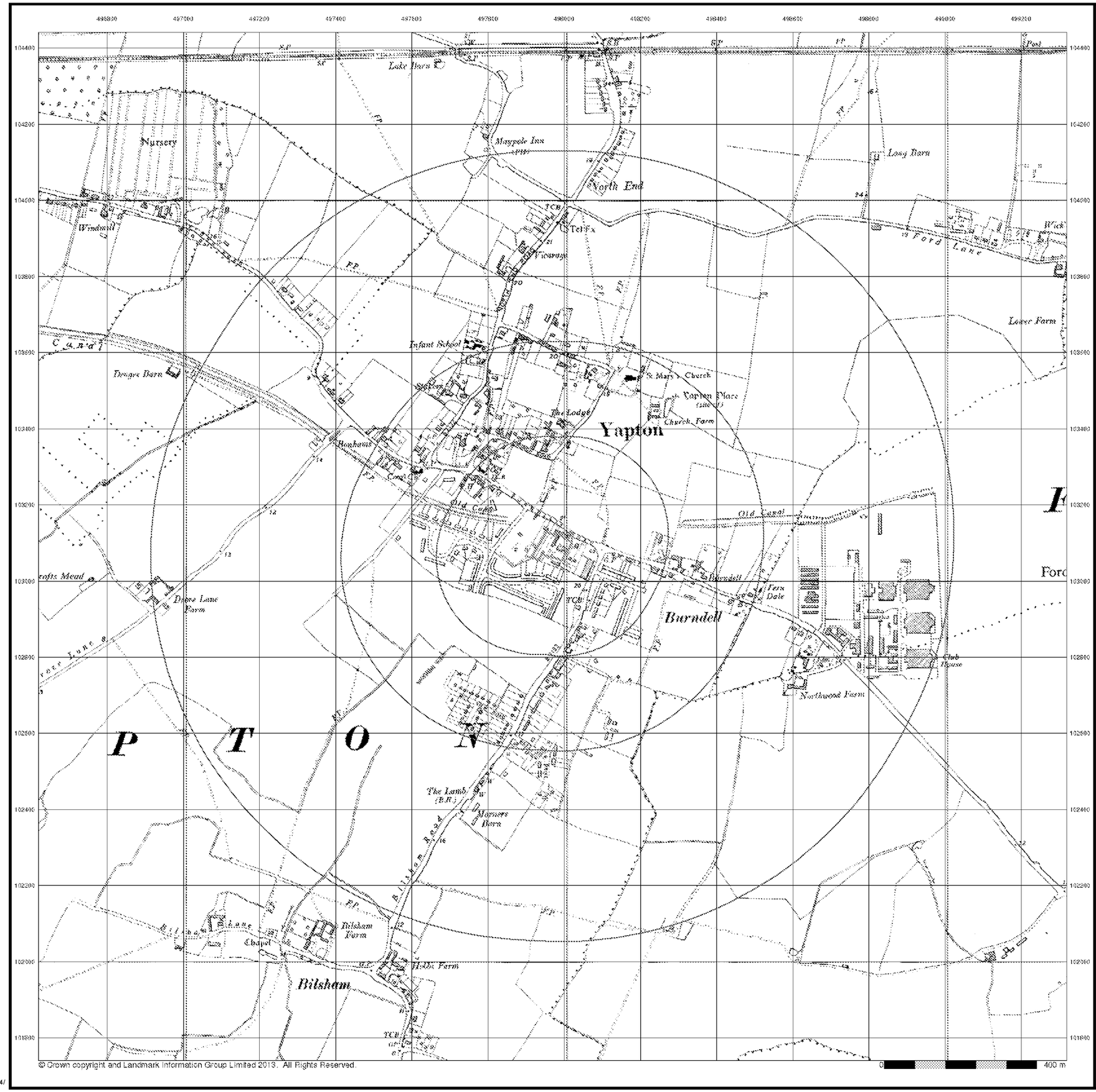

© Crown copyright and Landmark Information Group Limited 2013. All Rights Reserved.

0 400 m

Southern Testing
Environmental & Geotechnical

Ordnance Survey Plan

Published 1967

Source map scale - 1:10,000

The historical maps shown were reproduced from maps predominantly held at the scale adopted for England, Wales and Scotland in the 1840`s. In 1854 the 1:2,500 scale was adopted for mapping urban areas; these maps were used to update the 1:10,560 maps. The published date given therefore is often some years later than the surveyed date. Before 1938, all OS maps were based on the Cassini Projection, with independent surveys of a single county or group of counties, giving rise to significant inaccuracies in outlying areas. In the late 1940`s, a Provisional Edition was produced, which updated the 1:10,560 mapping from a number of sources. The maps appear unfinished - with all military camps and other strategic sites removed. These maps were initially overprinted with the National Grid. In 1970, the first 1:10,000 maps were produced using the Transverse Mercator Projection. The revision process continued until recently, with new editions appearing every 10 years or so for urban areas.

Map Name(s) and Date(s)

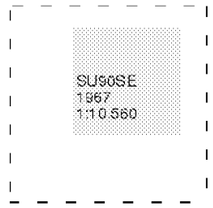

Historical Map - Slice A

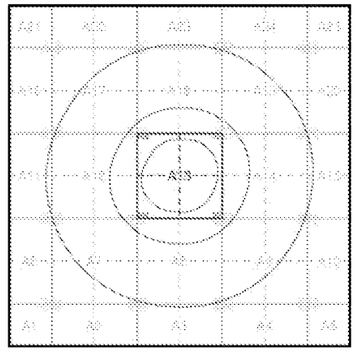

N

Order Details

Order Number:	50942437_1_1
Customer Ref:	DS2535 / SKT
National Grid Reference:	497970, 103090
Slice:	A
Site Area (Ha):	0.5
Search Buffer (m):	1000

Site Details

Land West of Kings Close, Yapton, ARUNDEL, West Sussex, BN18 0EX

Landmark Information Group
Tel: 0844 844 9952
Fax: 0844 844 9951
Web: www.envirocheck.co.uk

ARUN DISTRICT COUNCIL Y/22/14/

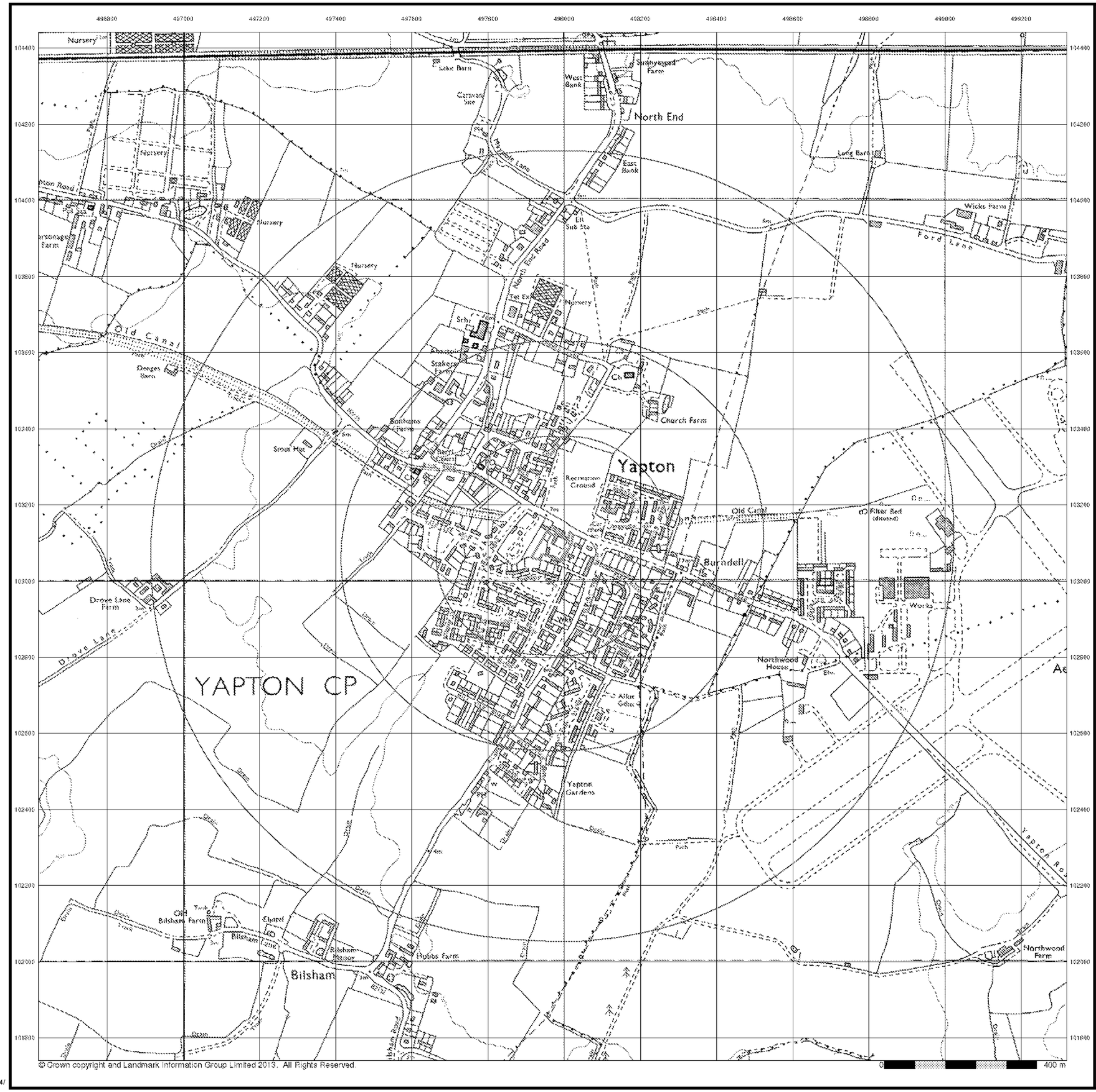

© Crown copyright and Landmark Information Group Limited 2013. All Rights Reserved.

Southern Testing
Environmental & Geotechnical

Ordnance Survey Plan

Published 1980

Source map scale - 1:10,000

The historical maps shown were reproduced from maps predominantly held at the scale adopted for England, Wales and Scotland in the 1840`s. In 1854 the 1:2,500 scale was adopted for mapping urban areas; these maps were used to update the 1:10,560 maps. The published date given therefore is often some years later than the surveyed date. Before 1938, all OS maps were based on the Cassini Projection, with independent surveys of a single county or group of counties, giving rise to significant inaccuracies in outlying areas. In the late 1940`s, a Provisional Edition was produced, which updated the 1:10,560 mapping from a number of sources. The maps appear unfinished - with all military camps and other strategic sites removed. These maps were initially overprinted with the National Grid. In 1970, the first 1:10,000 maps were produced using the Transverse Mercator Projection. The revision process continued until recently, with new editions appearing every 10 years or so for urban areas.

Map Name(s) and Date(s)

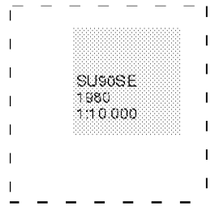

Historical Map - Slice A

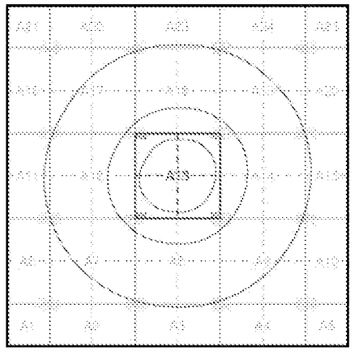

N

Order Details

Order Number:	50942437_1_1
Customer Ref:	DS2535 / SKT
National Grid Reference:	497970, 103090
Slice:	A
Site Area (Ha):	0.5
Search Buffer (m):	1000

Site Details

Land West of Kings Close, Yapton, ARUNDEL, West Sussex, BN18 0EX

Landmark Information Group
Tel: 0844 844 9952
Fax: 0844 844 9951
Web: www.envirocheck.co.uk

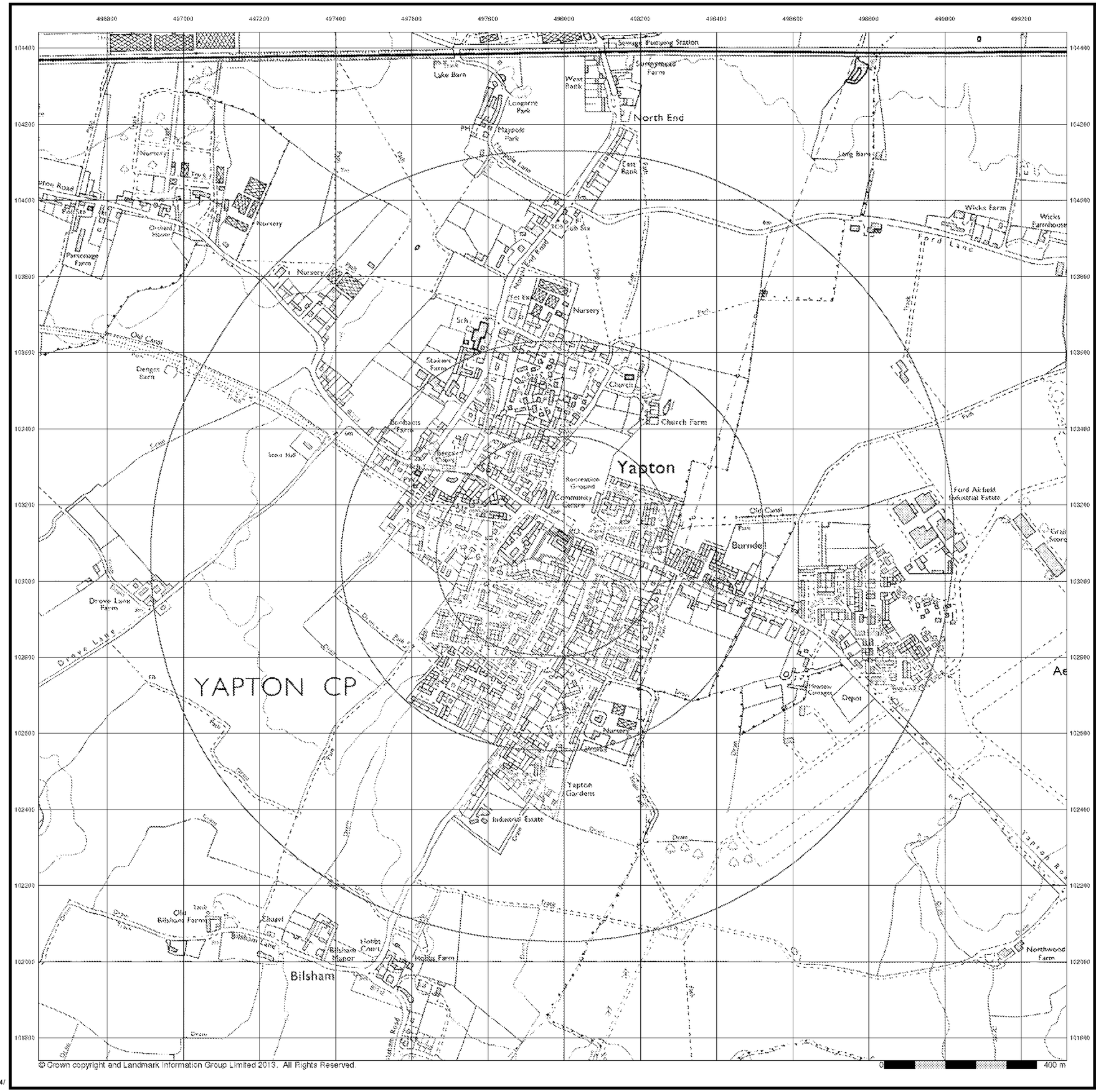

© Crown copyright and Landmark Information Group Limited 2013. All Rights Reserved.

Southern Testing
Environmental & Geotechnical

Ordnance Survey Plan

Published 1992

Source map scale - 1:10,000

The historical maps shown were reproduced from maps predominantly held at the scale adopted for England, Wales and Scotland in the 1840`s. In 1854 the 1:2,500 scale was adopted for mapping urban areas; these maps were used to update the 1:10,560 maps. The published date given therefore is often some years later than the surveyed date. Before 1938, all OS maps were based on the Cassini Projection, with independent surveys of a single county or group of counties, giving rise to significant inaccuracies in outlying areas. In the late 1940`s, a Provisional Edition was produced, which updated the 1:10,560 mapping from a number of sources. The maps appear unfinished - with all military camps and other strategic sites removed. These maps were initially overprinted with the National Grid. In 1970, the first 1:10,000 maps were produced using the Transverse Mercator Projection. The revision process continued until recently, with new editions appearing every 10 years or so for urban areas.

Map Name(s) and Date(s)

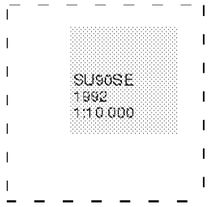

Historical Map - Slice A

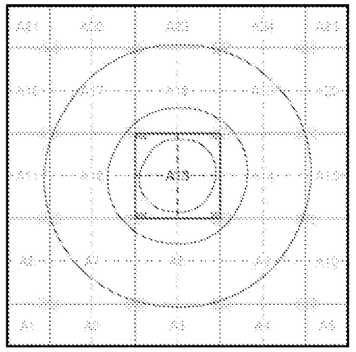

N

Order Details

Order Number:	50942437_1_1
Customer Ref:	DS2535 / SKT
National Grid Reference:	497970, 103090
Slice:	A
Site Area (Ha):	0.5
Search Buffer (m):	1000

Site Details

Land West of Kings Close, Yapton, ARUNDEL, West Sussex, BN18 0EX

Landmark Information Group
Tel: 0844 844 9952
Fax: 0844 844 9951
Web: www.envirocheck.co.uk

ARUN DISTRICT COUNCIL Y/22/14/

© Crown copyright. All Rights Reserved. Licence Number 100022432.

0 400 m

Southern Testing
Environmental & Geotechnical

10k Raster Mapping

Published 2006

Source map scale - 1:10,000

The historical maps shown were produced from the Ordnance Survey`s 1:10,000 colour raster mapping. These maps are derived from Landplan which replaced the old 1:10,000 maps originally published in 1970. The data is highly detailed showing buildings, fences and field boundaries as well as all roads, tracks and paths. Road names are also included together with the relevant road number and classification. Boundary information depiction includes county, unitary authority, district, civil parish and constituency.

Map Name(s) and Date(s)

SU90SE
2006
1:10,000

Historical Map - Slice A

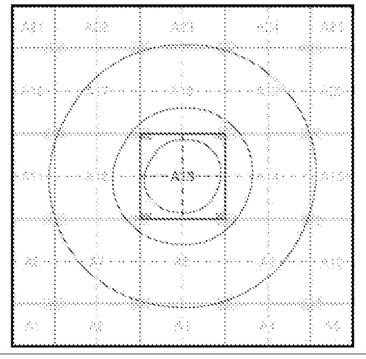

Order Details

Order Number:	50942437_1_1
Customer Ref:	DS2535 / SKT
National Grid Reference:	497970, 103090
Slice:	A
Site Area (Ha):	0.5
Search Buffer (m):	1000

Site Details

Land West of Kings Close, Yapton, ARUNDEL, West Sussex, BN18 0EX

Landmark Information Group
Tel: 0844 844 9952
Fax: 0844 844 9951
Web: www.envirocheck.co.uk

ARUN DISTRICT COUNCIL Y/22/14/

© Crown copyright. All Rights Reserved. Licence Number 100022432.

ARUN DISTRICT COUNCIL Y/22/14/

Southern Testing
Environmental & Geotechnical

10k Raster Mapping
Published 2013
Source map scale - 1:10,000

The historical maps shown were produced from the Ordnance Survey`s 1:10,000 colour raster mapping. These maps are derived from Landplan which replaced the old 1:10,000 maps originally published in 1970. The data is highly detailed showing buildings, fences and field boundaries as well as all roads, tracks and paths. Road names are also included together with the relevant road number and classification. Boundary information depiction includes county, unitary authority, district, civil parish and constituency.

Map Name(s) and Date(s)

SU90SE
2013
1:10,000

Historical Map - Slice A

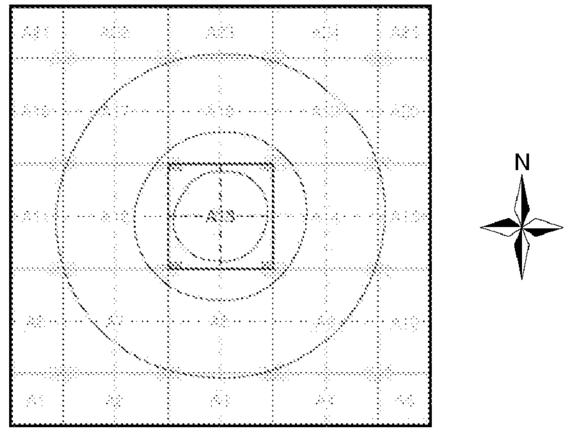

Order Details

Order Number: 50942437_1_1
Customer Ref: DS2535 / SKT
National Grid Reference: 497970, 103090
Slice: A
Site Area (Ha): 0.5
Search Buffer (m): 1000

Site Details

Land West of Kings Close, Yapton, ARUNDEL, West Sussex, BN18 0EX

Landmark

Tel: 0844 844 9952
Fax: 0844 844 9951
Web: www.envirocheck.co.uk

Historical Mapping Legends

Ordnance Survey County Series and Ordnance Survey Plan 1:2,500

Quarry
Gravel Pit
Sand Pit
Clay Pit
Shingle
Refuse Heap
Sloping Masonry
Flat Rock
Marsh
Reeds
Osiers
Rough Pasture
Furze
Wood
Mixed Wood
Brushwood
Orchard
Fir
Ford
Stepping Stones
Ferry
Waterfall
Lock
Trig. Station
Altitude at Trig. Station
B.M.325·9 Bench Mark
342 Surface Level
Arrow denotes flow of water
Antiquities (site of)
Cutting
Embankment
Railway crossing Road
Level Crossing
Road crossing Railway
Railway crossing River or Canal
Road over single stream
Road over River or Canal
County Boundary (Geographical)
County & Civil Parish Boundary
Administrative County & Civil Parish Boundary
Co. Boro. Bdy. County Borough Boundary (England)
Co. Burgh Bdy. County Burgh Boundary (Scotland)

B.P. B.S	Boundary Post or Stone	P.C.B	Police Call Box
B.R.	Bridle Road	P	Pump
E.P	Electricity Pylon	S.P	Signal Post
F.B.	Foot Bridge	Sl.	Sluice
F.P.	Foot Path	Sp.	Spring
G.P	Guide Post or Board	T.C.B	Telephone Call Box
M.S	Mile Stone	Tr.	Trough
M.P. M.R	Mooring Post or Ring	W	Well

Ordnance Survey Plan, Additional SIMs and Supply of Unpublished Survey Information 1:2,500 and 1:1,250

Inactive Quarry, Chalk Pit or Clay Pit
Active Quarry, Chalk Pit or Clay Pit
Rock
Boulders
Cliff
Slopes
Top
Roofed Building
Glazed Roof Building
Sloping Masonry
Archway
Non-Coniferous Tree (surveyed)
Coniferous Tree (surveyed)
Non-Coniferous Trees (not surveyed)
Coniferous Trees (not surveyed)
Orchard Tree
Scrub
Bracken
Coppice, Osier
Reeds
Marsh, Saltings
Rough Grassland
Heath
Culvert
Direction of water flow
Bench Mark
Antiquity (site of)
Cave Entrance
Triangulation Station
Electricity Pylon
Electricity Transmission Line
County Boundary (Geographical)
County & Civil Parish Boundary
Civil Parish Boundary
Admin. County or County Bor. Boundary
L B Bdy London Borough Boundary
Symbol marking point where boundary mereing changes

BH	Beer House	P	Pillar, Pole or Post
BP, BS	Boundary Post or Stone	PO	Post Office
Cn, C	Capstan, Crane	PC	Public Convenience
Chy	Chimney	PH	Public House
D Fn	Drinking Fountain	Pp	Pump
El P	Electricity Pillar or Post	SB, S Br	Signal Box or Bridge
FAP	Fire Alarm Pillar	SP, SL	Signal Post or Light
FB	Foot Bridge	Spr	Spring
GP	Guide Post	Tk	Tank or Track
H	Hydrant or Hydraulic	TCB	Telephone Call Box
LC	Level Crossing	TCP	Telephone Call Post
MH	Manhole	Tr	Trough
MP	Mile Post or Mooring Post	Wr Pt, Wr T	Water Point, Water Tap
MS	Mile Stone	W	Well
NTL	Normal Tidal Limit	Wd Pp	Wind Pump

Large-Scale National Grid Data 1:2,500 and 1:1,250

Cliff
Slopes
Top
Rock
Rock (scattered)
Boulders
Boulders (scattered)
Positioned Boulder
Scree
Non-Coniferous Tree (surveyed)
Coniferous Tree (surveyed)
Non-Coniferous Trees (not surveyed)
Coniferous Trees (not surveyed)
Orchard Tree
Scrub
Bracken
Coppice, Osier
Reeds
Marsh, Saltings
Rough Grassland
Heath
Culvert
Direction of water flow
Triangulation Station
Antiquity (site of)
Electricity Transmission Line
Electricity Pylon
BM 291.60m Bench Mark
Buildings with Building Seed
Roofed Building
Glazed Roof Building
Civil parish/community boundary
District boundary
County boundary
Boundary post/stone
Boundary mereing symbol (note: these always appear in opposed pairs or groups of three)

Bks	Barracks	P	Pillar, Pole or Post
Bty	Battery	PO	Post Office
Cemy	Cemetery	PC	Public Convenience
Chy	Chimney	Pp	Pump
Cis	Cistern	Ppg Sta	Pumping Station
Dismtd Rly	Dismantled Railway	PW	Place of Worship
El Gen Sta	Electricity Generating Station	Sewage Ppg Sta	Sewage Pumping Station
El P	Electricity Pole, Pillar	SB, S Br	Signal Box or Bridge
El Sub Sta	Electricity Sub Station	SP, SL	Signal Post or Light
FB	Filter Bed	Spr	Spring
Fn / D Fn	Fountain / Drinking Ftn.	Tk	Tank or Track
Gas Gov	Gas Valve Compound	Tr	Trough
GVC	Gas Governer	Wd Pp	Wind Pump
GP	Guide Post	Wr Pt, Wr T	Water Point, Water Tap
MH	Manhole	Wks	Works (building or area)
MP, MS	Mile Post or Mile Stone	W	Well

Southern Testing
Environmental & Geotechnical

Historical Mapping & Photography included:

Mapping Type	Scale	Date	Pg
Sussex	1:2,500	1876 - 1877	2
Sussex	1:2,500	1897 - 1898	3
Sussex	1:2,500	1912	4
Sussex	1:2,500	1937 - 1940	5
Ordnance Survey Plan	1:2,500	1974 - 1975	6
Additional SIMs	1:2,500	1978 - 1982	7
Additional SIMs	1:2,500	1982 - 1989	8
Ordnance Survey Plan	1:2,500	1984	9
Additional SIMs	1:2,500	1984 - 1989	10
Additional SIMs	1:2,500	1991 - 1992	11
Large-Scale National Grid Data	1:2,500	1994	12
Large-Scale National Grid Data	1:2,500	1994 - 1995	13

Historical Map - Segment A13

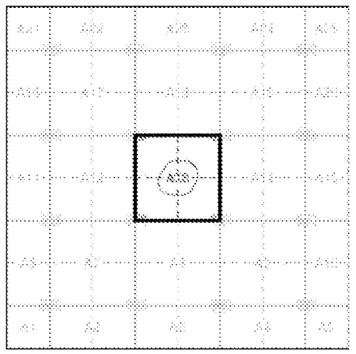

Order Details

Order Number: 50942437_1_1
Customer Ref: DS2535 / SKT
National Grid Reference: 497970, 103090
Slice: A
Site Area (Ha): 0.5
Search Buffer (m): 100

Site Details

Land West of Kings Close, Yapton, ARUNDEL, West Sussex, BN18 0EX

Landmark Information Group
Tel: 0844 844 9952
Fax: 0844 844 9951
Web: www.envirocheck.co.uk

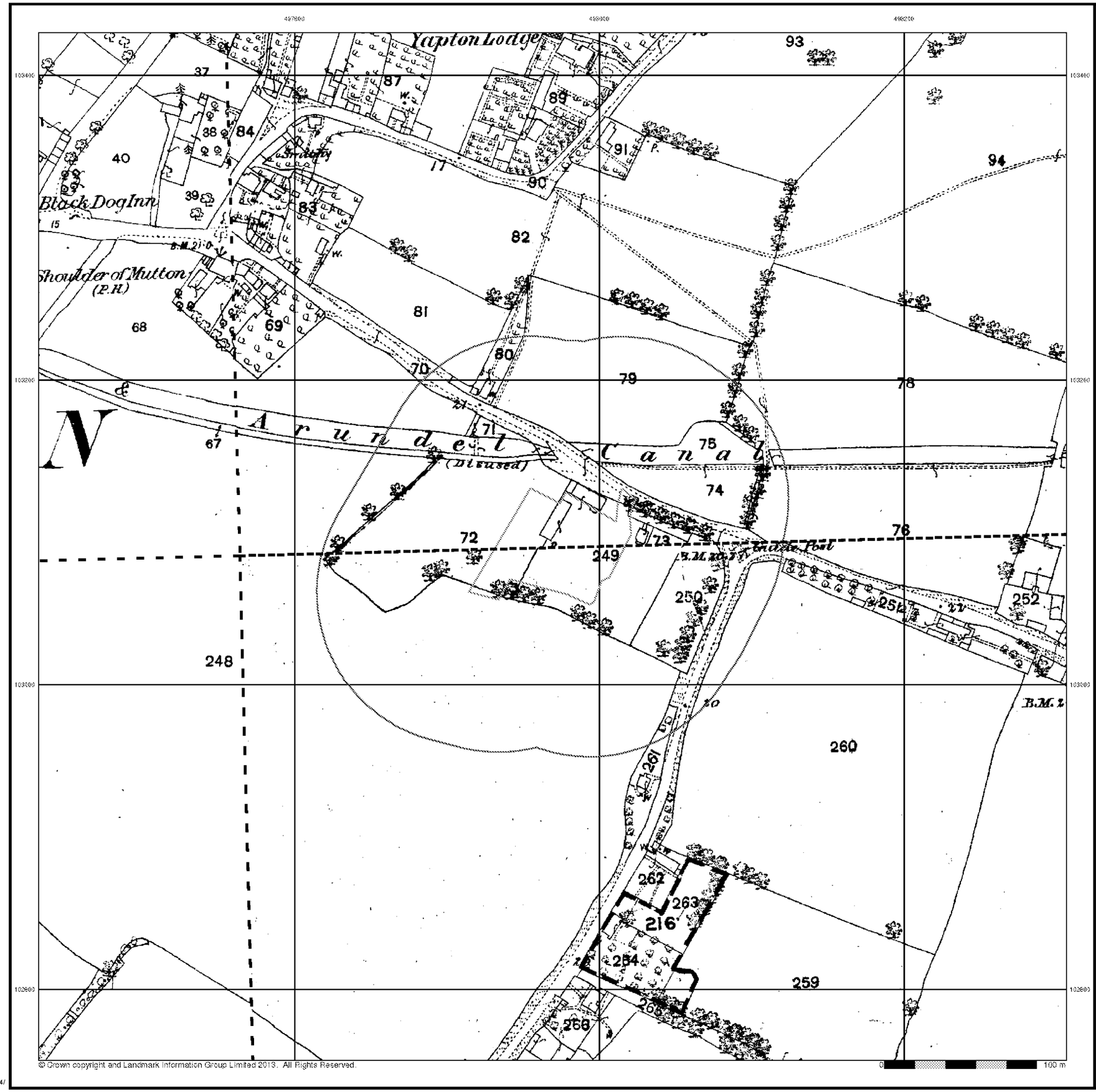

© Crown copyright and Landmark Information Group Limited 2013. All Rights Reserved.

0 100 m

Southern Testing
Environmental & Geotechnical

Sussex

Published 1876 - 1877

Source map scale - 1:2,500

The historical maps shown were reproduced from maps predominantly held at the scale adopted for England, Wales and Scotland in the 1840's. In 1854 the 1:2,500 scale was adopted for mapping urban areas and by 1896 it covered the whole of what were considered to be the cultivated parts of Great Britain. The published date given below is often some years later than the surveyed date. Before 1938, all OS maps were based on the Cassini Projection, with independent surveys of a single county or group of counties, giving rise to significant inaccuracies in outlying areas.

Map Name(s) and Date(s)

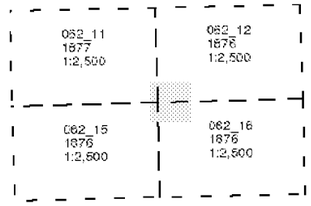

Historical Map - Segment A13

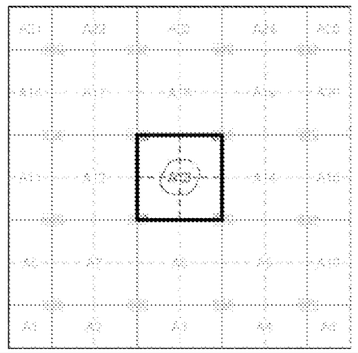

N

Order Details

Order Number:	50942437_1_1
Customer Ref:	DS2535 / SKT
National Grid Reference:	497970, 103090
Slice:	A
Site Area (Ha):	0.5
Search Buffer (m):	100

Site Details

Land West of Kings Close, Yapton, ARUNDEL, West Sussex, BN18 0EX

Landmark Information Group
Tel: 0844 844 9952
Fax: 0844 844 9951
Web: www.environcheck.co.uk

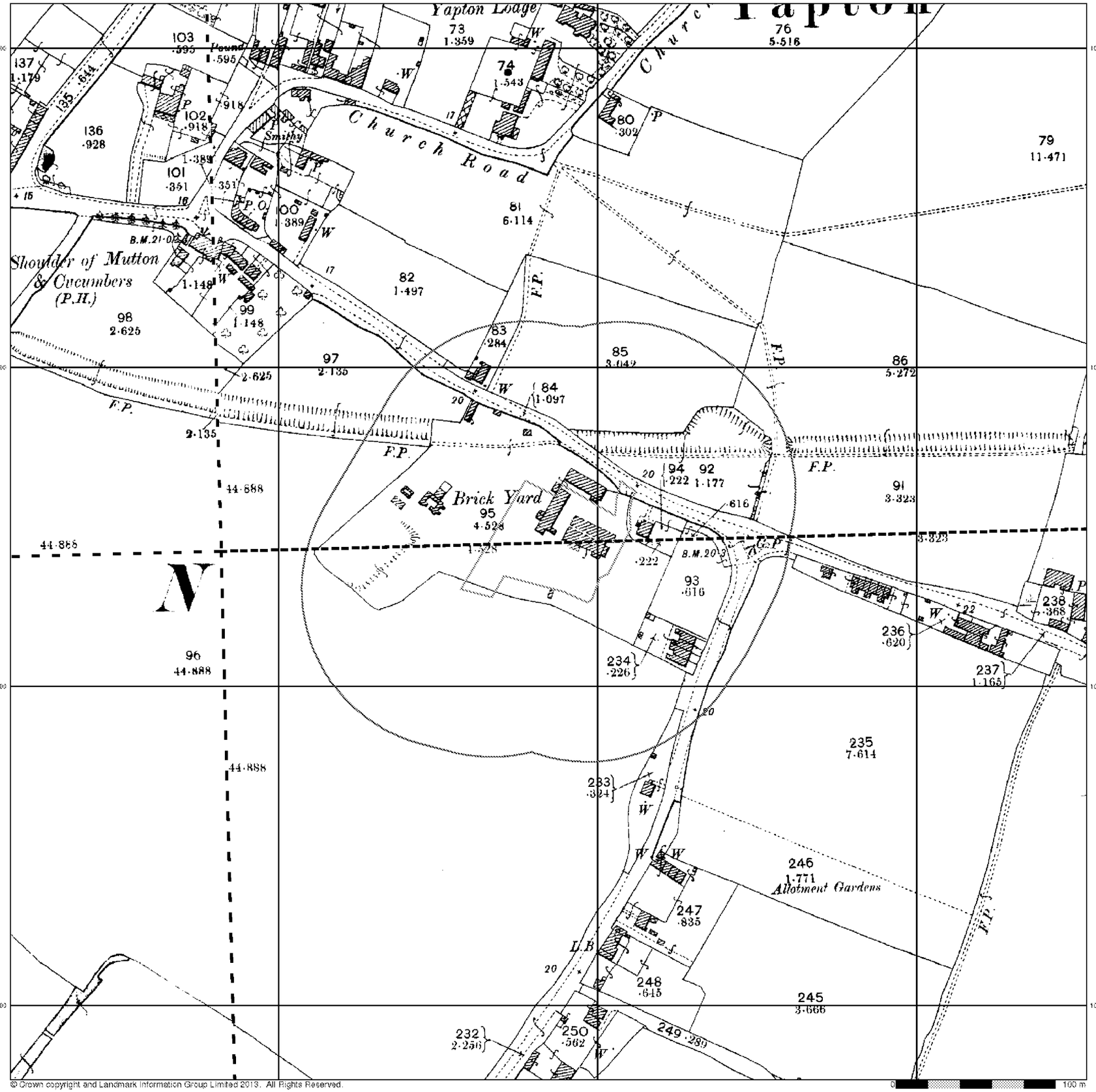

© Crown copyright and Landmark Information Group Limited 2013. All Rights Reserved.

Southern Testing
Environmental & Geotechnical

Sussex

Published 1897 - 1898

Source map scale - 1:2,500

The historical maps shown were reproduced from maps predominantly held at the scale adopted for England, Wales and Scotland in the 1840's. In 1854 the 1:2,500 scale was adopted for mapping urban areas and by 1896 it covered the whole of what were considered to be the cultivated parts of Great Britain. The published date given below is often some years later than the surveyed date. Before 1938, all OS maps were based on the Cassini Projection, with independent surveys of a single county or group of counties, giving rise to significant inaccuracies in outlying areas.

Map Name(s) and Date(s)

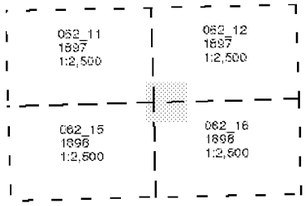

Historical Map - Segment A13

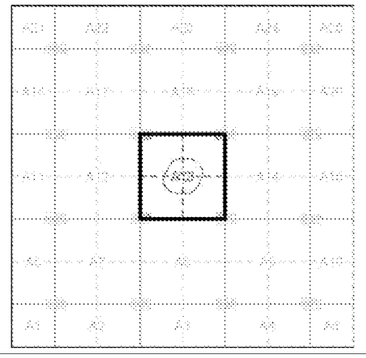

Order Details

Order Number:	50942437_1_1
Customer Ref:	DS2535 / SKT
National Grid Reference:	497970, 103090
Slice:	A
Site Area (Ha):	0.5
Search Buffer (m):	100

Site Details

Land West of Kings Close, Yapton, ARUNDEL, West Sussex, BN18 0EX

Landmark Information Group
Tel: 0844 844 9952
Fax: 0844 844 9951
Web: www.envirocheck.co.uk

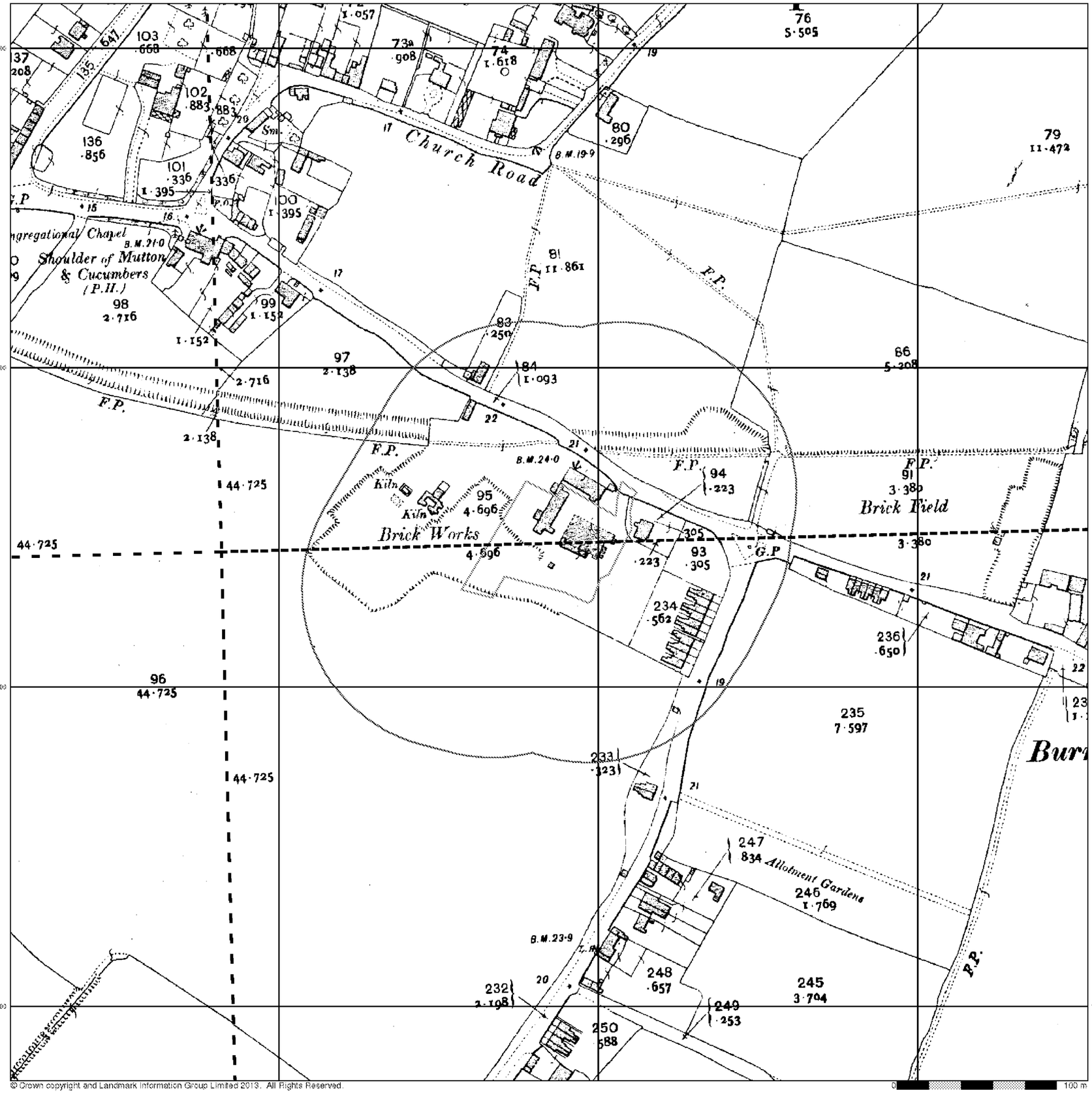

Southern Testing
Environmental & Geotechnical

Sussex

Published 1912

Source map scale - 1:2,500

The historical maps shown were reproduced from maps predominantly held at the scale adopted for England, Wales and Scotland in the 1840's. In 1854 the 1:2,500 scale was adopted for mapping urban areas and by 1896 it covered the whole of what were considered to be the cultivated parts of Great Britain. The published date given below is often some years later than the surveyed date. Before 1938, all OS maps were based on the Cassini Projection, with independent surveys of a single county or group of counties, giving rise to significant inaccuracies in outlying areas.

Map Name(s) and Date(s)

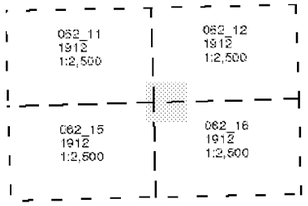

Historical Map - Segment A13

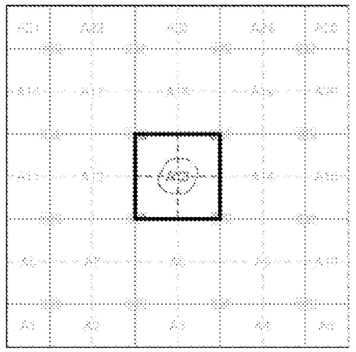

N

Order Details

Order Number:	50942437_1_1
Customer Ref:	DS2535 / SKT
National Grid Reference:	497970, 103090
Slice:	A
Site Area (Ha):	0.5
Search Buffer (m):	100

Site Details

Land West of Kings Close, Yapton, ARUNDEL, West Sussex, BN18 0EX

Landmark Information Group

Tel: 0844 844 9952
Fax: 0844 844 9951
Web: www.envirocheck.co.uk

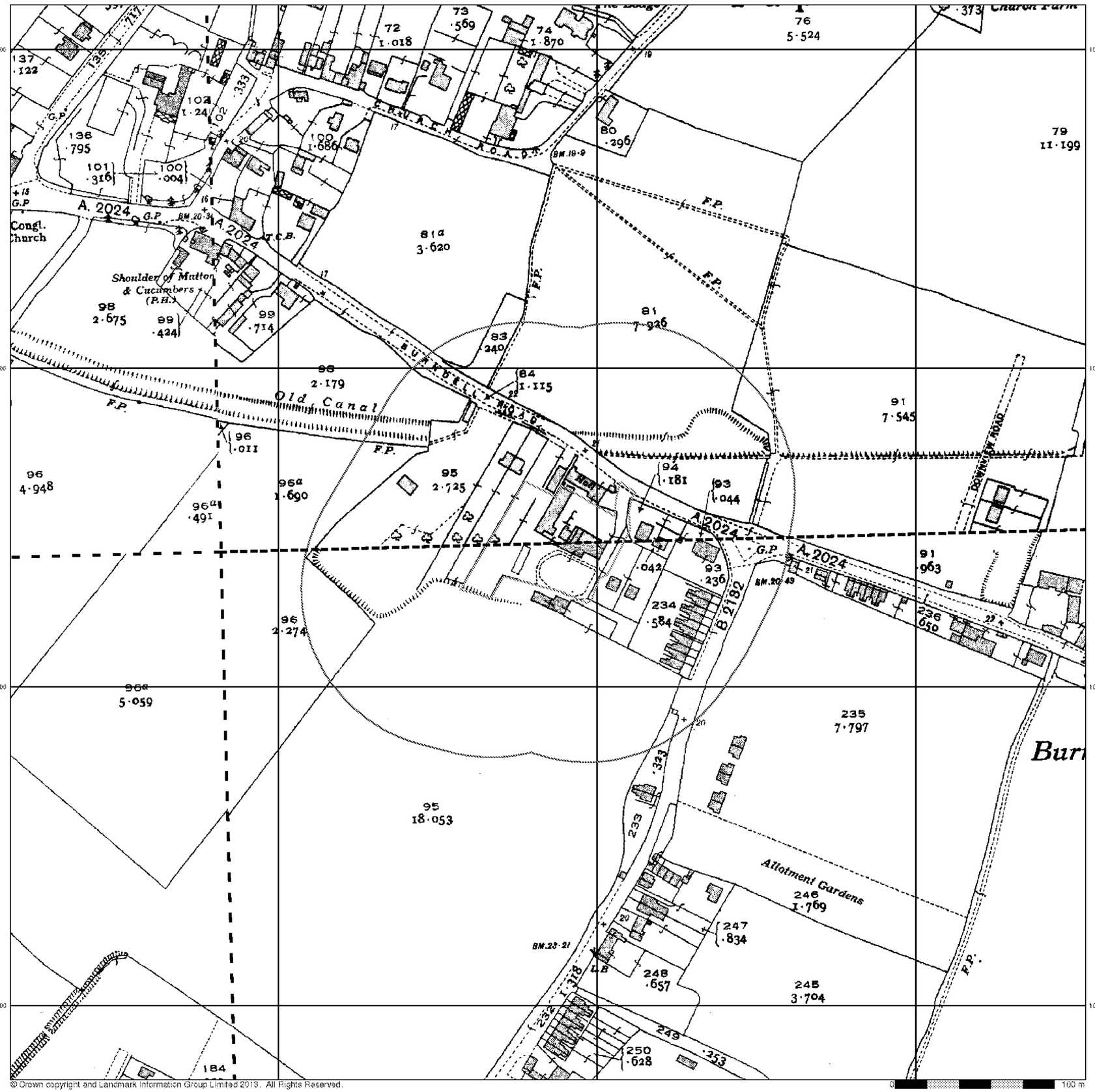

© Crown copyright and Landmark Information Group Limited 2013. All Rights Reserved.

Southern Testing
Environmental & Geotechnical

Sussex

Published 1937 - 1940

Source map scale - 1:2,500

The historical maps shown were reproduced from maps predominantly held at the scale adopted for England, Wales and Scotland in the 1840's. In 1854 the 1:2,500 scale was adopted for mapping urban areas and by 1896 it covered the whole of what were considered to be the cultivated parts of Great Britain. The published date given below is often some years later than the surveyed date. Before 1938, all OS maps were based on the Cassini Projection, with independent surveys of a single county or group of counties, giving rise to significant inaccuracies in outlying areas.

Map Name(s) and Date(s)

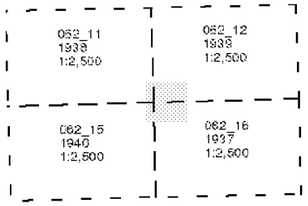

Historical Map - Segment A13

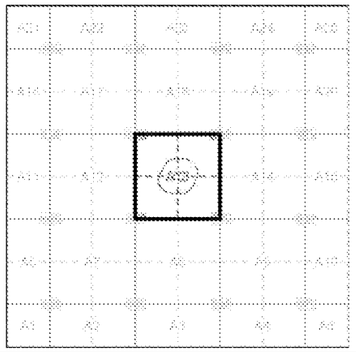

N

Order Details

Order Number:	50942437_1_1
Customer Ref:	DS2535 / SKT
National Grid Reference:	497970, 103090
Slice:	A
Site Area (Ha):	0.5
Search Buffer (m):	100

Site Details

Land West of Kings Close, Yapton, ARUNDEL, West Sussex, BN18 0EX

Landmark Information Group
Tel: 0844 844 9952
Fax: 0844 844 9951
Web: www.envirocheck.co.uk

© Crown copyright and Landmark Information Group Limited 2013. All Rights Reserved.

Southern Testing
Environmental & Geotechnical

Ordnance Survey Plan
Published 1974 - 1975
Source map scale - 1:2,500

The historical maps shown were reproduced from maps predominantly held at the scale adopted for England, Wales and Scotland in the 1840's. In 1854 the 1:2,500 scale was adopted for mapping urban areas and by 1896 it covered the whole of what were considered to be the cultivated parts of Great Britain. The published date given below is often some years later than the surveyed date. Before 1938, all OS maps were based on the Cassini Projection, with independent surveys of a single county or group of counties, giving rise to significant inaccuracies in outlying areas.

Map Name(s) and Date(s)

SU9703 1975 1:2,500	SU9603 1974 1:2,500
SU9702 1975 1:2,500	SU9602 1975 1:2,500

Historical Map - Segment A13

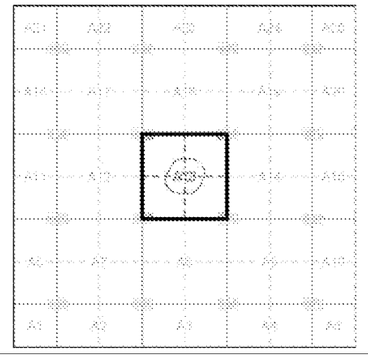

N

Order Details

Order Number:	50942437_1_1
Customer Ref:	DS2535 / SKT
National Grid Reference:	497970, 103090
Slice:	A
Site Area (Ha):	0.5
Search Buffer (m):	100

Site Details

Land West of Kings Close, Yapton, ARUNDEL, West Sussex, BN18 0EX

Landmark Information Group
Tel: 0844 844 9952
Fax: 0844 844 9951
Web: www.envirocheck.co.uk

ARUN DISTRICT COUNCIL Y/22/14/

© Crown copyright and Landmark Information Group Limited 2013. All Rights Reserved.

Southern Testing
Environmental & Geotechnical

Additional SIMs

Published 1978 - 1982

Source map scale - 1:2,500

The SIM cards (Ordnance Survey's `Survey of Information on Microfilm') are further, minor editions of mapping which were produced and published in between the main editions as an area was updated. They date from 1947 to 1994, and contain detailed information on buildings, roads and land-use. These maps were produced at both 1:2,500 and 1:1,250 scales.

Map Name(s) and Date(s)

SU9703 1982 1:2,500	SU9603 1976 1:2,500
SU9702 1976 1:2,500	SU9602 1976 1:2,500

Historical Map - Segment A13

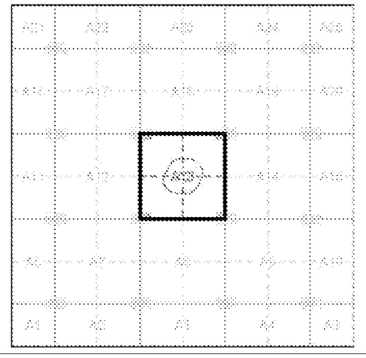

N

Order Details

Order Number:	50942437_1_1
Customer Ref:	DS2535 / SKT
National Grid Reference:	497970, 103090
Slice:	A
Site Area (Ha):	0.5
Search Buffer (m):	100

Site Details

Land West of Kings Close, Yapton, ARUNDEL, West Sussex, BN18 0EX

Landmark
Tel: 0844 844 9952
Fax: 0844 844 9951
Web: www.envirocheck.co.uk

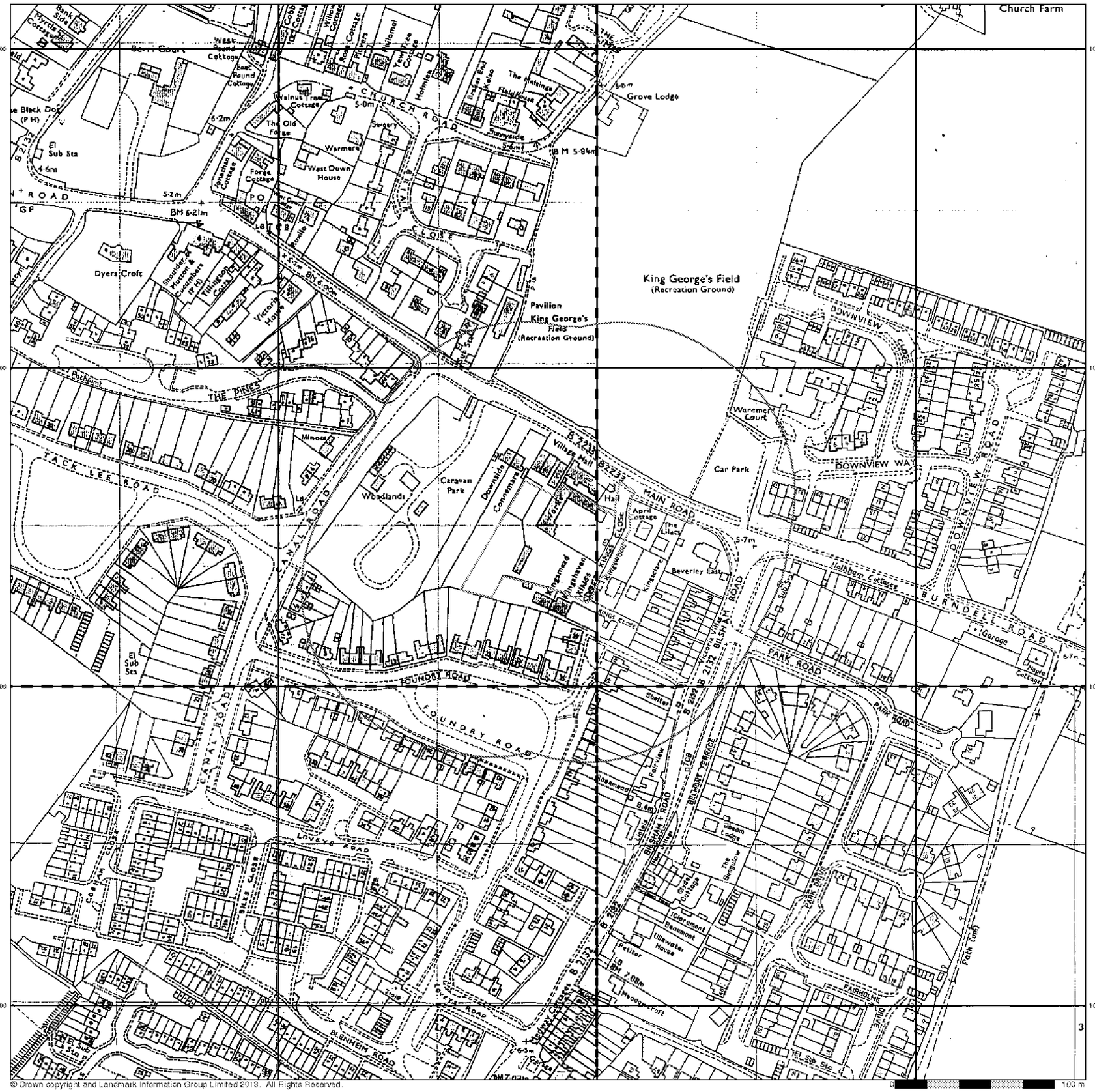

© Crown copyright and Landmark Information Group Limited 2013. All Rights Reserved.

Southern Testing
Environmental & Geotechnical

Additional SIMs

Published 1982 - 1989

Source map scale - 1:2,500

The SIM cards (Ordnance Survey's `Survey of Information on Microfilm') are further, minor editions of mapping which were produced and published in between the main editions as an area was updated. They date from 1947 to 1994, and contain detailed information on buildings, roads and land-use. These maps were produced at both 1:2,500 and 1:1,250 scales.

Map Name(s) and Date(s)

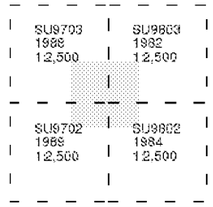

Historical Map - Segment A13

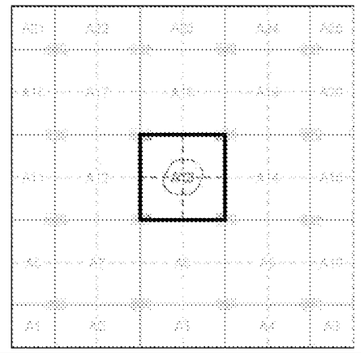

Order Details

Order Number:	50942437_1_1
Customer Ref:	DS2535 / SKT
National Grid Reference:	497970, 103090
Slice:	A
Site Area (Ha):	0.5
Search Buffer (m):	100

Site Details

Land West of Kings Close, Yapton, ARUNDEL, West Sussex, BN18 0EX

Landmark Information Group
Tel: 0844 844 9952
Fax: 0844 844 9951
Web: www.envirocheck.co.uk

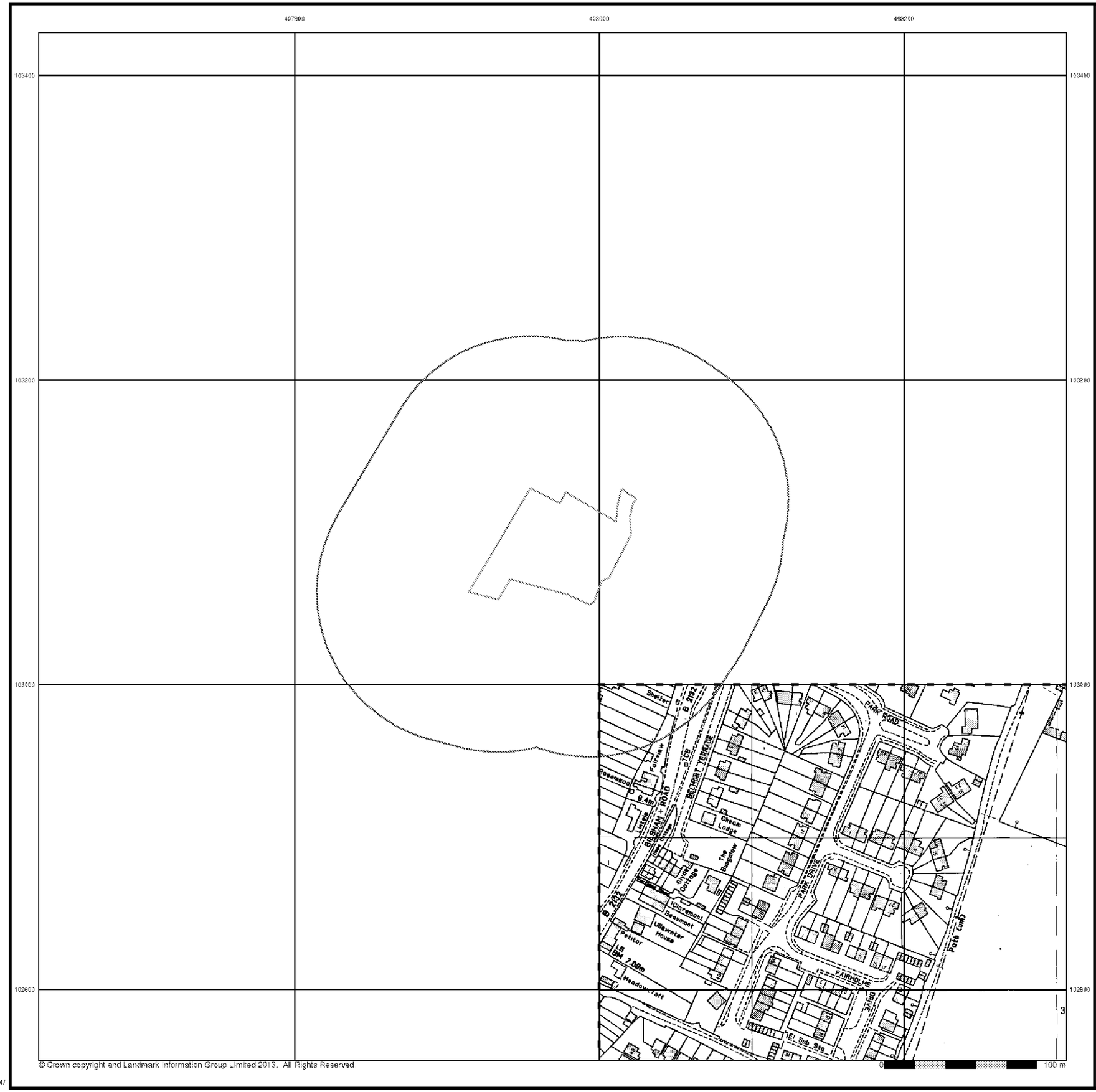

© Crown copyright and Landmark Information Group Limited 2013. All Rights Reserved.

Southern Testing
Environmental & Geotechnical

Ordnance Survey Plan

Published 1984

Source map scale - 1:2,500

The historical maps shown were reproduced from maps predominantly held at the scale adopted for England, Wales and Scotland in the 1840's. In 1854 the 1:2,500 scale was adopted for mapping urban areas and by 1896 it covered the whole of what were considered to be the cultivated parts of Great Britain. The published date given below is often some years later than the surveyed date. Before 1938, all OS maps were based on the Cassini Projection, with independent surveys of a single county or group of counties, giving rise to significant inaccuracies in outlying areas.

Map Name(s) and Date(s)

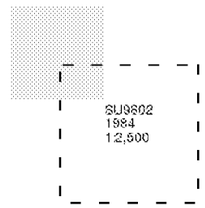

Historical Map - Segment A13

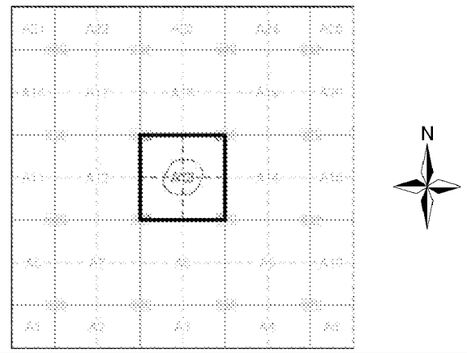

Order Details

Order Number:	50942437_1_1
Customer Ref:	DS2535 / SKT
National Grid Reference:	497970, 103090
Slice:	A
Site Area (Ha):	0.5
Search Buffer (m):	100

Site Details

Land West of Kings Close, Yapton, ARUNDEL, West Sussex, BN18 0EX

Landmark Information Group
Tel: 0844 844 9952
Fax: 0844 844 9951
Web: www.envirocheck.co.uk

© Crown copyright and Landmark Information Group Limited 2013. All Rights Reserved.

Southern Testing
Environmental & Geotechnical

Additional SIMs

Published 1984 - 1989

Source map scale - 1:2,500

The SIM cards (Ordnance Survey's `Survey of Information on Microfilm') are further, minor editions of mapping which were produced and published in between the main editions as an area was updated. They date from 1947 to 1994, and contain detailed information on buildings, roads and land-use. These maps were produced at both 1:2,500 and 1:1,250 scales.

Map Name(s) and Date(s)

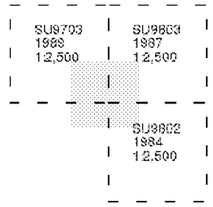

Historical Map - Segment A13

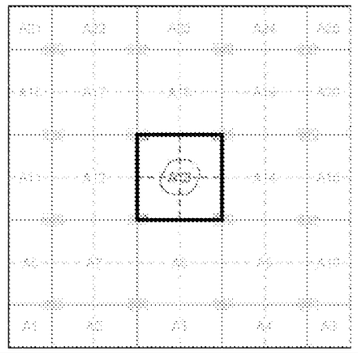

Order Details

Order Number:	50942437_1_1
Customer Ref:	DS2535 / SKT
National Grid Reference:	497970, 103090
Slice:	A
Site Area (Ha):	0.5
Search Buffer (m):	100

Site Details

Land West of Kings Close, Yapton, ARUNDEL, West Sussex, BN18 0EX

Landmark Information Group
Tel: 0844 844 9952
Fax: 0844 844 9951
Web: www.envirocheck.co.uk

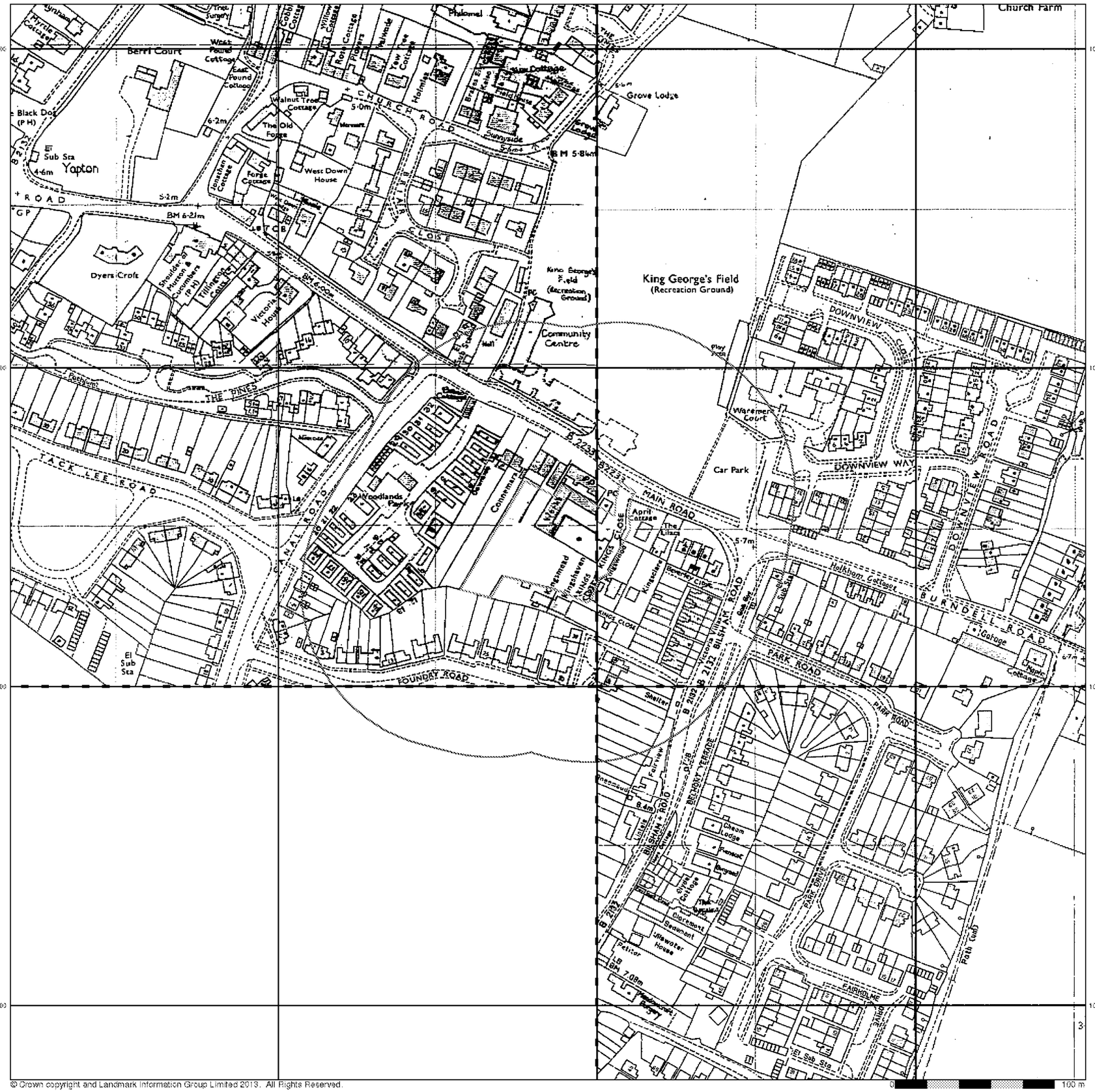

© Crown copyright and Landmark Information Group Limited 2013. All Rights Reserved.

Southern Testing
Environmental & Geotechnical

Additional SIMs

Published 1991 - 1992

Source map scale - 1:2,500

The SIM cards (Ordnance Survey's `Survey of Information on Microfilm') are further, minor editions of mapping which were produced and published in between the main editions as an area was updated. They date from 1947 to 1994, and contain detailed information on buildings, roads and land-use. These maps were produced at both 1:2,500 and 1:1,250 scales.

Map Name(s) and Date(s)

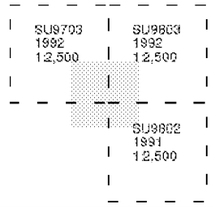

Historical Map - Segment A13

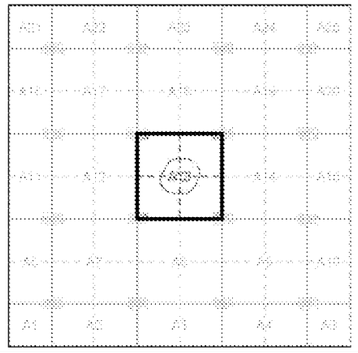

Order Details

Order Number:	50942437_1_1
Customer Ref:	DS2535 / SKT
National Grid Reference:	497970, 103090
Slice:	A
Site Area (Ha):	0.5
Search Buffer (m):	100

Site Details

Land West of Kings Close, Yapton, ARUNDEL, West Sussex, BN18 0EX

Landmark Information Group
Tel: 0844 844 9952
Fax: 0844 844 9951
Web: www.envirocheck.co.uk

ARUN DISTRICT COUNCIL Y/22/14/

© Crown copyright and Landmark Information Group Limited 2013. All Rights Reserved.

ARUN DISTRICT COUNCIL Y/22/14/

Southern Testing
Environmental & Geotechnical

Large-Scale National Grid Data

Published 1994

Source map scale - 1:2,500

'Large Scale National Grid Data' superseded SIM cards (Ordnance Survey's 'Survey of Information on Microfilm') in 1992, and continued to be produced until 1999. These maps were the fore-runners of digital mapping and so provide detailed information on houses and roads, but tend to show less topographic features such as vegetation. These maps were produced at both 1:2,500 and 1:1,250 scales.

Map Name(s) and Date(s)

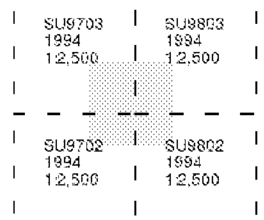

Historical Map - Segment A13

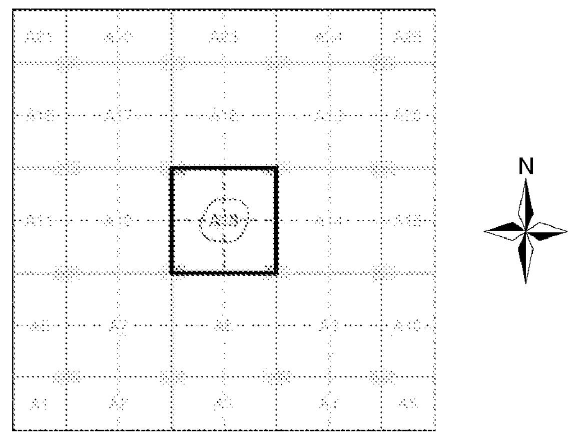

Order Details

Order Number: 50942437_1_1
Customer Ref: DS2535 / SKT
National Grid Reference: 497970, 103090
Slice: A
Site Area (Ha): 0.5
Search Buffer (m): 100

Site Details

Land West of Kings Close, Yapton, ARUNDEL, West Sussex, BN18 0EX

Landmark Information Group

Tel: 0844 844 9952
Fax: 0844 844 9951
Web: www.envirocheck.co.uk

© Crown copyright and Landmark Information Group Limited 2013. All Rights Reserved.

0 100 m

Southern Testing
Environmental & Geotechnical

Large-Scale National Grid Data

Published 1994 - 1995

Source map scale - 1:2,500

'Large Scale National Grid Data' superseded SIM cards (Ordnance Survey's 'Survey of Information on Microfilm') in 1992, and continued to be produced until 1999. These maps were the fore-runners of digital mapping and so provide detailed information on houses and roads, but tend to show less topographic features such as vegetation. These maps were produced at both 1:2,500 and 1:1,250 scales.

Map Name(s) and Date(s)

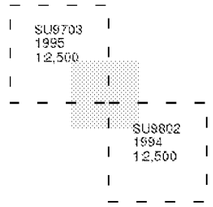

Historical Map - Segment A13

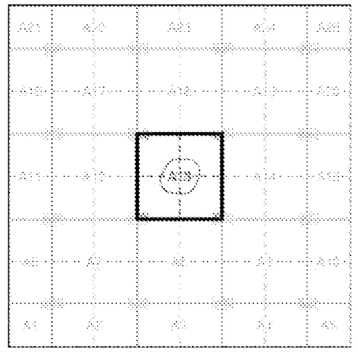

N

Order Details

Order Number:	50942437_1_1
Customer Ref:	DS2535 / SKT
National Grid Reference:	497970, 103090
Slice:	A
Site Area (Ha):	0.5
Search Buffer (m):	100

Site Details

Land West of Kings Close, Yapton, ARUNDEL, West Sussex, BN18 0EX

Landmark Information Group
Tel: 0844 844 9952
Fax: 0844 844 9951
Web: www.envirocheck.co.uk

ARUN DISTRICT COUNCIL Y/22/14/

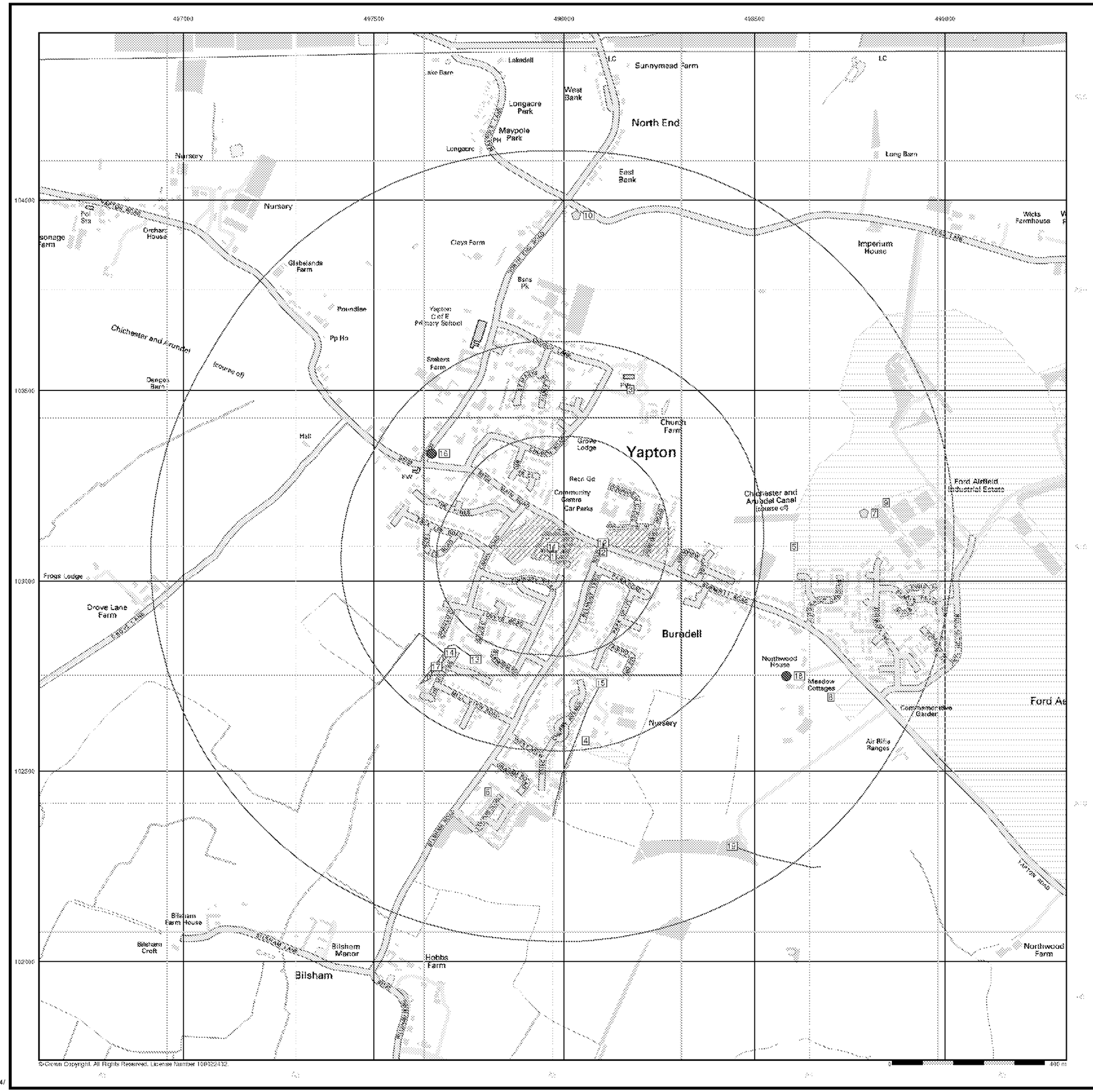

Southern Testing
Environmental & Geotechnical

General
- Specified Site
- Specified Buffer(s)
- Bearing Reference Point
- Map ID
- Several of Type at Location

Historical Building Plans
- Area Cleared due to Enemy Action

Historical Land Use
- Former Marsh
- Historical Flood Liability
- Historical Flood Liability (Location)
- Potentially Contaminative Industrial Use (Past Land Use)
- Potentially Contaminative Industrial Use (Past Land Use) (Linear)
- Potentially Contaminative Industrial Use (Past Land Use) (Location)
- Potentially Infilled Land (Non-Water)
- Potentially Infilled Land (Non-Water) (Linear)
- Potentially Infilled Land (Non-Water) (Location)
- Potentially Infilled Land (Water)
- Potentially Infilled Land (Water) (Linear)
- Potentially Infilled Land (Water) (Location)

Historical Data Report - Slice Map A

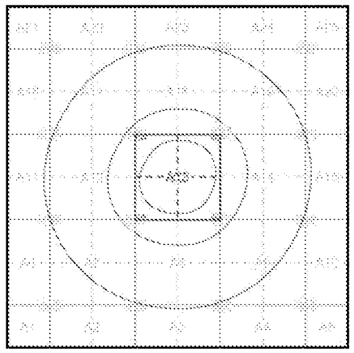

Order Details

Order Number:	50942437_1_1
Customer Ref:	DS2535 / SKT
National Grid Reference:	497970, 103090
Slice:	A
Site Area (Ha):	0.5
Search Buffer (m):	1000

Site Details
Land West of Kings Close, Yapton, ARUNDEL, West Sussex, BN18 0EX

Landmark Information Group
Tel: 0844 844 9952
Fax: 0844 844 9951
Web: www.envirocheck.co.uk

ARUN DISTRICT COUNCIL Y/22/14/

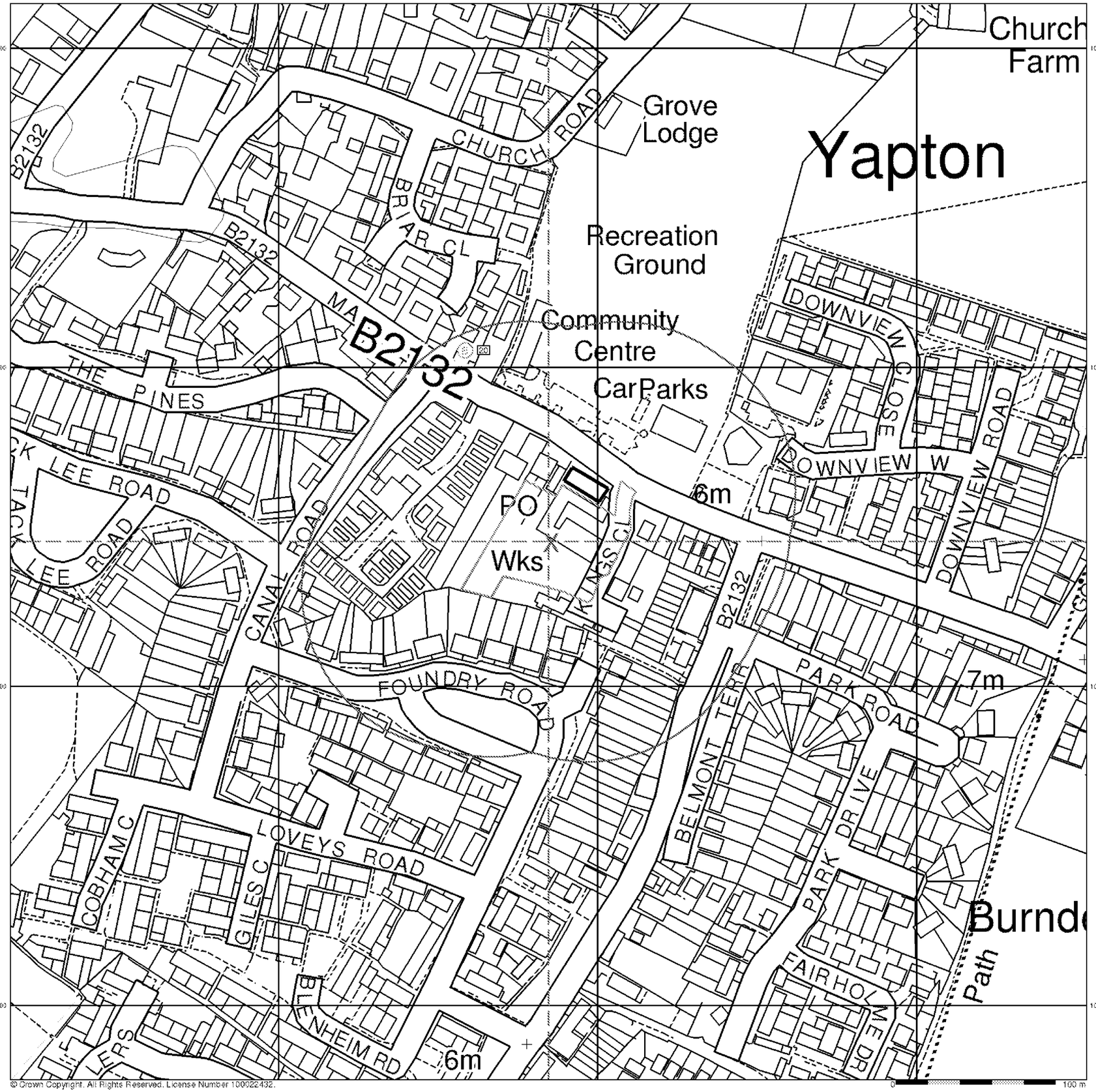

Southern Testing
Environmental & Geotechnical

General
- Specified Site
- Specified Buffer(s)
- Bearing Reference Point
- Map ID
- Several of Type at Location

Historical Building Plans
- Area Cleared due to Enemy Action
- Asbestos
- Above Ground Fuel Tanks
- Benzene/Benzole/Naphtha, Naphthalene/Kerosene
- Electricity Generation
- Electricity Sub-Stations
- Gas Industry
- Gas Storage
- Gas Use
- Oil Industry
- Oil Storage
- Oil Use
- Paint based Oils
- Paraffin
- Petrol and Diesel Industry
- Petrol and Diesel Storage
- Petrol and Diesel Use
- Potential Fuel Gas
- Potential Fuel Oil
- Potential Fuel Use
- Potential Petrol and Diesel
- Potential Tanks
- Potentially Fuel-related Tanks
- Underground Fuel Tanks

Historical Tanks and Energy Facilities
- Electrical Sub Station Facility
- Electricity Industry Facility
- Gas Industry Facility
- Gas Monitoring Facility
- Miscellaneous Power Facility
- Oil Industry Facility
- Petroleum Storage Facility
- Potential Tank
- Tank

Historical Data Report - Segment A13

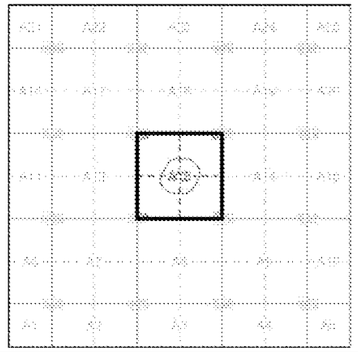

N

Order Details

Order Number:	50942437_1_1
Customer Ref:	DS2535 / SKT
National Grid Reference:	497970, 103090
Slice:	A
Site Area (Ha):	0.5
Plot Buffer (m):	100

Site Details
Land West of Kings Close, Yapton, ARUNDEL, West Sussex, BN18 0EX

Landmark Information Group
Tel: 0844 844 9952
Fax: 0844 844 9951
Web: www.envirocheck.co.uk

ARUN DISTRICT COUNCIL Y/22/14/

Southern Testing
Environmental & Geotechnical

Envirocheck® Report:

Historical Data Report Datasheet

Order Details:

Order Number:
50942437_1_1

Customer Reference:
DS2535 / SKT

National Grid Reference:
497970, 103090

Slice:
A

Site Area (Ha):
0.5

Search Buffer (m):
1000

Site Details:

Land West of Kings Close
Yapton
ARUNDEL
West Sussex
BN18 0EX

Client Details:

MR D Spearman
Southern Testing
Keeble House
Stuart Way
East Grinstead
West Sussex
RH19 4QA

Landmark

ARUN DISTRICT COUNCIL Y/22/14/

Contents

Report Section	Page Number
Summary	-
Historical Building Plans Information	-
Historical Land Use Information	1
Historical Tanks and Energy Facilities	2
Historical Map List	3
Useful Contacts and Further Information	4

Introduction

The Environment Act 1995 has made site sensitivity a key issue, as the legislation pays as much attention to the pathways by which contamination could spread, and to the vulnerable targets of contamination, as it does the potential sources of contamination.
For this reason, Landmark's Site Sensitivity maps and Datasheet(s) place great emphasis on statutory data provided by the Environment Agency and the Scottish Environment Protection Agency; it also incorporates data from Natural England (and the Scottish and Welsh equivalents) and Local Authorities; and highlights hydrogeological features required by environmental and geotechnical consultants. It does not include any information concerning past uses of land. The datasheet is produced by querying the Landmark database to a distance defined by the client from a site boundary provided by the client.

In the attached datasheet the National Grid References (NGRs) are rounded to the nearest 10m in accordance with Landmark's agreements with a number of Data Suppliers.

Copyright Notice

© Landmark Information Group Limited2013. The Copyright on the information and data and its format as contained in this Envirocheck® Report ("Report") is the property of Landmark Information Group Limited ("Landmark") and several other Data Providers, including (but not limited to) Ordnance Survey, British Geological Survey, the Environment Agency and Natural England, and must not be reproduced in whole or in part by photocopying or any other method. The Report is supplied under Landmark's Terms and Conditions accepted by the Customer.
A copy of Landmark's Terms and Conditions can be found with the Index Map for this report. Additional copies of the Report may be obtained from Landmark, subject to Landmark's charges in force from time to time. The Copyright, design rights and any other intellectual rights shall remain the exclusive property of Landmark and /or other Data providers, whose Copyright material has been included in this Report.

Report Version v47.0

Data Type	Page Number	On Site	0 to 250m	251 to 500m	501 to 1000m
Historical Building Plans Information					
Areas Cleared Due To Enemy Action					
Above Ground Fuel Tanks (100m)				n/a	n/a
Asbestos (100m)				n/a	n/a
Benzene/Benzole/Naphtha, Naphthalene/Kerosene (100m)				n/a	n/a
Electricity Generation (100m)				n/a	n/a
Electricity Sub-Stations (100m)				n/a	n/a
Gas Industry (100m)				n/a	n/a
Gas Storage (100m)				n/a	n/a
Gas Use (100m)				n/a	n/a
Oil Industry (100m)				n/a	n/a
Oil Storage (100m)				n/a	n/a
Oil Use (100m)				n/a	n/a
Paint based Oils (100m)				n/a	n/a
Paraffin (100m)				n/a	n/a
Petrol and Diesel Industry (100m)				n/a	n/a
Petrol and Diesel Storage (100m)				n/a	n/a
Petrol and Diesel Use (100m)				n/a	n/a
Potential Fuel Gas (100m)				n/a	n/a
Potential Fuel Oil (100m)				n/a	n/a
Potential Fuel Use (100m)				n/a	n/a
Potential Petrol and Diesel (100m)				n/a	n/a
Potential Tanks (100m)				n/a	n/a
Potentially Fuel-related Tanks (100m)				n/a	n/a
Underground Fuel Tanks (100m)				n/a	n/a
Historical Land Use Information					
Former Marshes					
Historical Flood Liabilities					
Potentially Contaminative Industrial Uses (Past Land Use)	pg 1	1	1	2	6
Potentially Infilled Land (Non-Water)	pg 1	1	1		
Potentially Infilled Land (Water)	pg 1			5	2

Summary

Data Type	Page Number	On Site	0 to 250m	251 to 500m	501 to 1000m
Historical Tanks and Energy Facilities					
Electrical Sub Station Facilities (100m)	pg 2		1	n/a	n/a
Electricity Industry Facilities (100m)				n/a	n/a
Gas Industry Facilities (100m)				n/a	n/a
Gas Monitoring Facilities (100m)				n/a	n/a
Miscellaneous Power Facilities (100m)				n/a	n/a
Oil Industry Facilities (100m)				n/a	n/a
Petroleum Storage Facilities (100m)				n/a	n/a
Potential Tanks (100m)				n/a	n/a
Tanks (100m)				n/a	n/a

Southern Testing
Environmental & Geotechnical

Historical Land Use Information

Map ID	Details	Quadrant Reference (Compass Direction)	Estimated Distance From Site	Contact	NGR
1	**Potentially Contaminative Industrial Uses (Past Land Use)** Use: Clay bricks & tiles [manufacture] Date of Mapping: 1899 - 1913	A13SE (SE)	0	1	497971 103090
2	**Potentially Contaminative Industrial Uses (Past Land Use)** Use: Clay bricks & tiles [manufacture] Date of Mapping: 1913	A13NE (E)	82	1	498102 103100
3	**Potentially Contaminative Industrial Uses (Past Land Use)** Use: Cemetery or Graveyard Date of Mapping: 1880	A18SE (NE)	407	1	498174 103503
4	**Potentially Contaminative Industrial Uses (Past Land Use)** Use: Factory or works - use not specified Date of Mapping: 1992	A8NE (S)	477	1	498056 102581
5	**Potentially Contaminative Industrial Uses (Past Land Use)** Use: Transport: air and space, cargo and handling and transport support Date of Mapping: 1962	A14SW (E)	580	1	498603 103090
6	**Potentially Contaminative Industrial Uses (Past Land Use)** Use: Factory or works - use not specified Date of Mapping: 1992	A8NW (S)	625	1	497800 102446
7	**Potentially Contaminative Industrial Uses (Past Land Use)** Use: Sewage Date of Mapping: 1951	A14NE (E)	766	1	498788 103178
8	**Potentially Contaminative Industrial Uses (Past Land Use)** Use: Road haulage Date of Mapping: 1992	A9NE (SE)	790	1	498701 102695
9	**Potentially Contaminative Industrial Uses (Past Land Use)** Use: Factory or works - use not specified Date of Mapping: 1992	A14NE (E)	827	1	498846 103205
10	**Potentially Contaminative Industrial Uses (Past Land Use)** Use: Electricity production & distribution [inc large transformers] Date of Mapping: 1992	A18NE (N)	832	1	498032 103960
11	**Potentially Infilled Land (Non-Water)** Use: Unknown Filled Ground (Pit, quarry etc) Date of Mapping: 1992	A13SE (SE)	0	1	497971 103090
12	**Potentially Infilled Land (Non-Water)** Use: Unknown Filled Ground (Pit, quarry etc) Date of Mapping: 1992	A13NE (E)	82	1	498102 103100
13	**Potentially Infilled Land (Water)** Use: Unknown Filled Ground (Pond, marsh, river, stream, dock etc) Date of Mapping: 1951	A13SW (SW)	304	1	497767 102794
14	**Potentially Infilled Land (Water)** Use: Unknown Filled Ground (Pond, marsh, river, stream, dock etc) Date of Mapping: 1899	A13SW (SW)	330	1	497699 102811
15	**Potentially Infilled Land (Water)** Use: Unknown Filled Ground (Pond, marsh, river, stream, dock etc) Date of Mapping: 1962	A8NE (S)	338	1	498098 102731
16	**Potentially Infilled Land (Water)** Use: Unknown Filled Ground (Pond, marsh, river, stream, dock etc) Date of Mapping: 1962	A13NW (NW)	367	1	497652 103335
17	**Potentially Infilled Land (Water)** Use: Unknown Filled Ground (Pond, marsh, river, stream, dock etc) Date of Mapping: 1899	A13SW (SW)	381	1	497664 102775
18	**Potentially Infilled Land (Water)** Use: Unknown Filled Ground (Pond, marsh, river, stream, dock etc) Date of Mapping: 1913	A9NW (SE)	660	1	498583 102750
19	**Potentially Infilled Land (Water)** Use: Unknown Filled Ground (Pond, marsh, river, stream, dock etc) Date of Mapping: 1951	A9SW (SE)	873	1	498441 102303

Historical Tanks and Energy Facilities

Map ID	Details	Quadrant Reference (Compass Direction)	Estimated Distance From Site	Contact	NGR
20	**Electrical Sub Station Facilities** Scale of Mapping: 1:2,500 Date of Mapping: 1975	A13NW (NW)	90	1	497917 103211

No Historical Building Plans information available.

The following mapping has been analysed for Historical Land Use Information:

1:10,560	Mapsheet	Published Date
Sussex	062_00	1880
Sussex	062_SE	1899
Sussex	062_SE	1913
Sussex	062_SE	1951
Ordnance Survey Plan	SU90SE	1962
1:10,000	**Mapsheet**	**Published Date**
Ordnance Survey Plan	SU90SE	1992

The following mapping has been analysed for Historical Tanks and Energy Facilities:

1:2,500	Mapsheet	Published Date
Ordnance Survey Plan	SU9803	1974
Ordnance Survey Plan	SU9702	1975
Ordnance Survey Plan	SU9703	1975
Ordnance Survey Plan	SU9802	1975
Ordnance Survey Plan	SU9802	1984

Useful Contacts and Further Information

Contact	Name and Address	Contact Details
1	**Landmark Information Group Limited** Imperium, Imperial Way, Reading, Berkshire, RG2 0TD	Telephone: 0844 844 9952 Fax: 0844 844 9951 Email: customerservices@landmark.co.uk Website: www.landmarkinfo.co.uk

Historical Building Plans Information

This data set contains potentially contaminative features such as asbestos, petrol, oil and tanks captured from Historical Building Plans. The Historical Building Plans were produced by the London-based firm Charles E. Goad Ltd. as fire insurance plans, dating back to 1885. The firm ceased production of fire insurance plans in 1970. Most of the important towns and cities of the British Isles are covered. Historical Building Plans are usually at the scales of 1:480 (1 inch to 40 feet) for the British Isles. They were updated every 5-6 years by means of revision sheets designed to be pasted on to the original plans.

It should be noted that Historical Building Plans are only available for certain major towns and cities and in some cases there may only be partial coverage of the search area. It cannot therefore be assumed that the absence of responses under the Historical Building Plans section of this report indicates that no hazards exist. Please check the Historical Building Plans Map List table in the Historical Map List section of this report to establish if Historical Building Plans are available for this search area.

Historical Land Use Information

Landmark's Historical Land Use Data is the result of combined analysis of historical map data captured at 1:10,560 and 1:10,000. A unique comprehensive database of Historic Land Use from the 1840's to 1996 it includes 67 different types of potentially contaminated past industrial land use. This entailed analysing over 60,000 maps and is drawn from at least four, and up to six historical map editions. In addition a seventh layer was also created, known as the land use layer, containing areas of infilled land which are plotted via comparison between two or more map editions.

Historical Tanks and Energy Facilities

In addition to HLUD, additional analysis uncovered some of the most dangerous sources of contamination (past and present tanks, petrol storage, oil, gas, electricity, miscellaneous facilities). This data set covers over 390,000 Historical Tanks and Energy facilities in Great Britain and was captured from post war 1:2500 and 1:1250 Ordnance Survey historical mapping covering a period from 1943 to 1996.

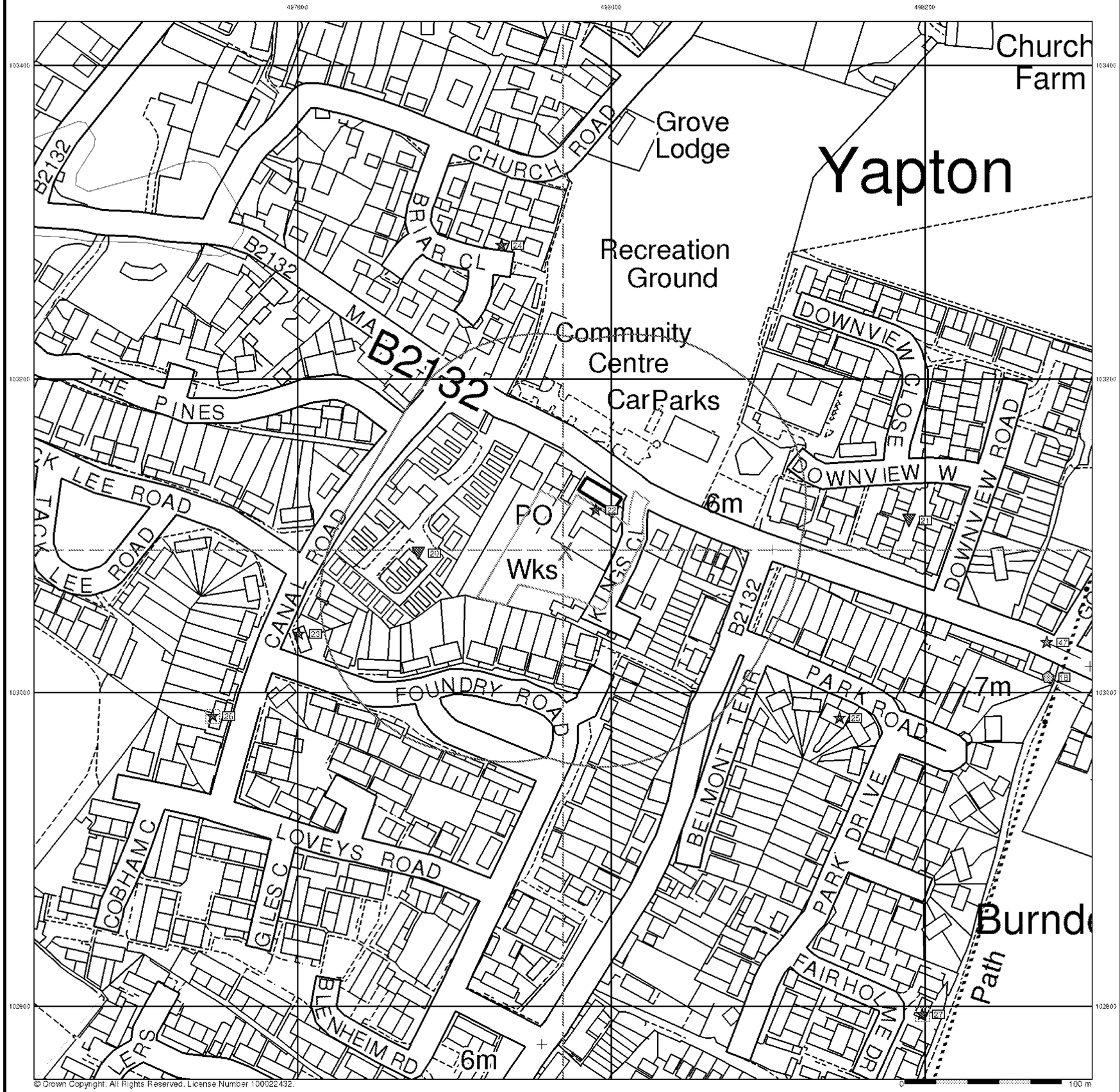

Southern Testing
Environmental & Geotechnical

General
- Specified Site
- Specified Buffer(s)
- Bearing Reference Point
- Map ID
- Several of Type at Location

Agency and Hydrological
- Contaminated Land Register Entry or Notice (Location)
- Contaminated Land Register Entry or Notice
- Discharge Consent
- Enforcement or Prohibition Notice
- Integrated Pollution Control
- Integrated Pollution Prevention Control
- Local Authority Integrated Pollution Prevention and Control
- Local Authority Pollution Prevention and Control
- Local Authority Pollution Prevention and Control Enforcement
- Pollution Incident to Controlled Waters
- Prosecution Relating to Authorised Processes
- Prosecution Relating to Controlled Waters
- Registered Radioactive Substance
- River Network or Water Feature
- River Quality Sampling Point
- Substantiated Pollution Incident Register
- Water Abstraction
- Water Industry Act Referral

Geological
- BGS Recorded Mineral Site

Industrial Land Use
- Contemporary Trade Directory Entry
- Fuel Station Entry

Waste
- BGS Recorded Landfill Site (Location)
- BGS Recorded Landfill Site
- EA Historic Landfill (Buffered Point)
- EA Historic Landfill (Polygon)
- Integrated Pollution Control Registered Waste Site
- Licensed Waste Management Facility (Landfill Boundary)
- Licensed Waste Management Facility (Location)
- Local Authority Recorded Landfill Site (Location)
- Local Authority Recorded Landfill Site
- Registered Landfill Site
- Registered Landfill Site (Location)
- Registered Landfill Site (Point Buffered to 100m)
- Registered Landfill Site (Point Buffered to 250m)
- Registered Waste Transfer Site (Location)
- Registered Waste Transfer Site
- Registered Waste Treatment or Disposal Site (Location)
- Registered Waste Treatment or Disposal Site

Hazardous Substances
- COMAH Site
- Explosive Site
- NIHHS Site
- Planning Hazardous Substance Consent
- Planning Hazardous Substance Enforcement

Site Sensitivity Map - Segment A13

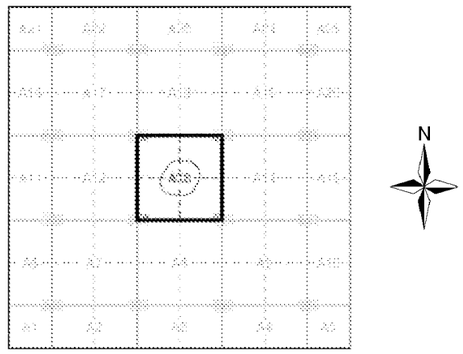

Order Details

Order Number:	50942437_1_1
Customer Ref:	DS2535 / SKT
National Grid Reference:	497970, 103090
Slice:	A
Site Area (Ha):	0.5

Site Details
Land West of Kings Close, Yapton, ARUNDEL, West Sussex, BN18 0EX

Landmark Information Group
Tel: 0844 844 9952
Fax: 0844 844 9951
Web: www.envirocheck.co.uk

ARUN DISTRICT COUNCIL Y/22/14/

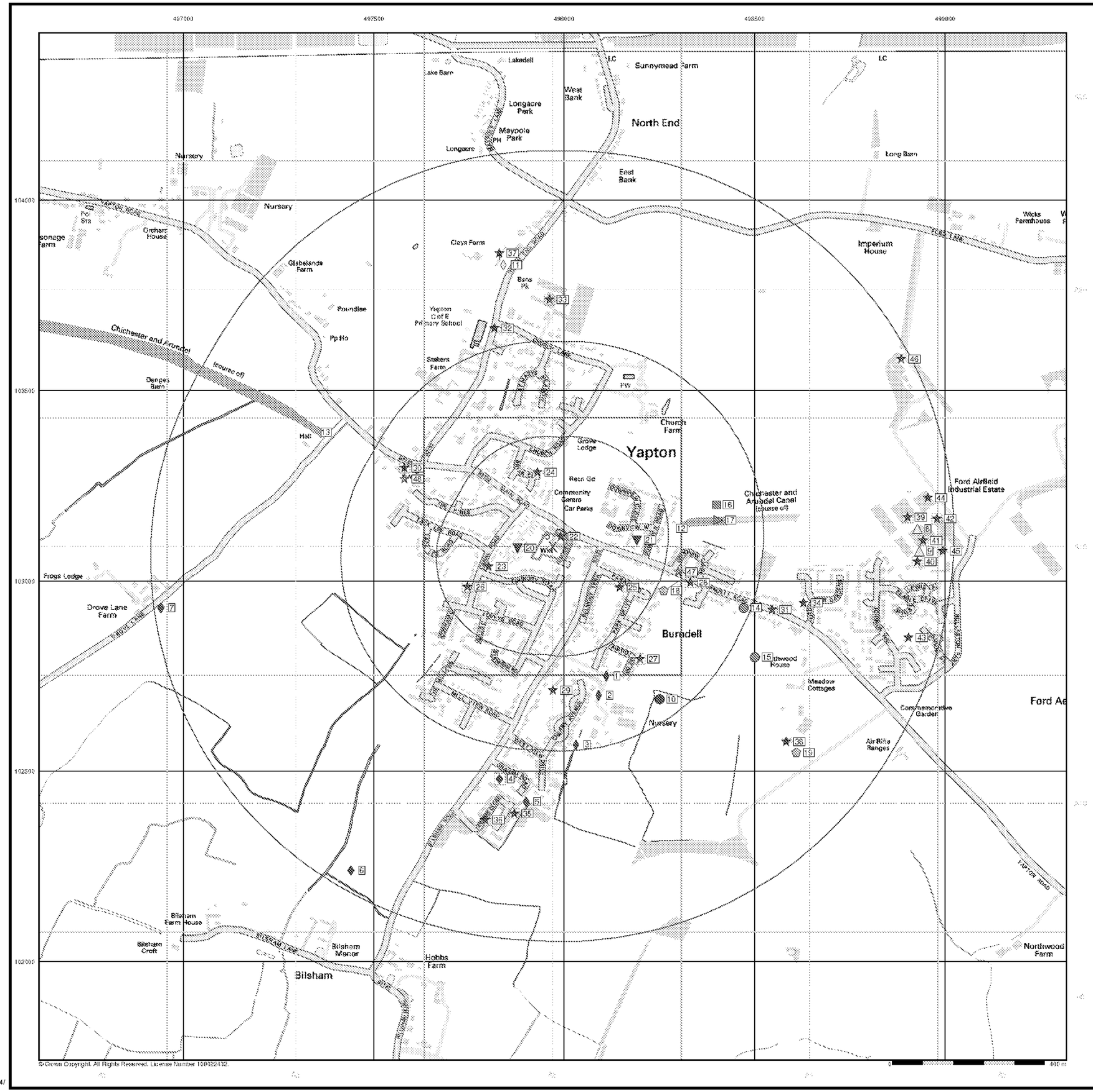

Southern Testing
Environmental & Geotechnical

General
- Specified Site
- Specified Buffer(s)
- Bearing Reference Point
- Map ID
- Several of Type at Location

Agency and Hydrological
- Contaminated Land Register Entry or Notice (Location)
- Contaminated Land Register Entry or Notice
- Discharge Consent
- Enforcement or Prohibition Notice
- Integrated Pollution Control
- Integrated Pollution Prevention Control
- Local Authority Integrated Pollution Prevention and Control
- Local Authority Pollution Prevention and Control
- Local Authority Pollution Prevention and Control Enforcement
- Pollution Incident to Controlled Waters
- Prosecution Relating to Authorised Processes
- Prosecution Relating to Controlled Waters
- Registered Radioactive Substance
- River Network or Water Feature
- River Quality Sampling Point
- Substantiated Pollution Incident Register
- Water Abstraction
- Water Industry Act Referral

Geological
- BGS Recorded Mineral Site

Industrial Land Use
- Contemporary Trade Directory Entry
- Fuel Station Entry

Waste
- BGS Recorded Landfill Site (Location)
- BGS Recorded Landfill Site
- EA Historic Landfill (Buffered Point)
- EA Historic Landfill (Polygon)
- Integrated Pollution Control Registered Waste Site
- Licensed Waste Management Facility (Landfill Boundary)
- Licensed Waste Management Facility (Location)
- Local Authority Recorded Landfill Site (Location)
- Local Authority Recorded Landfill Site
- Registered Landfill Site
- Registered Landfill Site (Location)
- Registered Landfill Site (Point Buffered to 100m)
- Registered Landfill Site (Point Buffered to 250m)
- Registered Waste Transfer Site (Location)
- Registered Waste Transfer Site
- Registered Waste Treatment or Disposal Site (Location)
- Registered Waste Treatment or Disposal Site

Hazardous Substances
- COMAH Site
- Explosive Site
- NIHHS Site
- Planning Hazardous Substance Consent
- Planning Hazardous Substance Enforcement

Site Sensitivity Map - Slice A

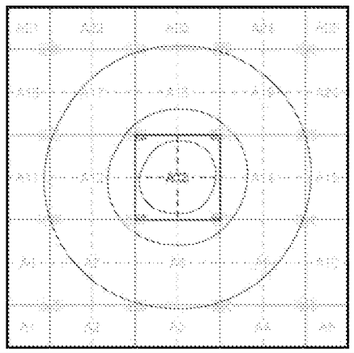

N

Order Details

Order Number:	50942437_1_1
Customer Ref:	DS2535 / SKT
National Grid Reference:	497970, 103090
Slice:	A
Site Area (Ha):	0.5
Search Buffer (m):	1000

Site Details
Land West of Kings Close, Yapton, ARUNDEL, West Sussex, BN18 0EX

Landmark Information Group
Tel: 0844 844 9952
Fax: 0844 844 9951
Web: www.envirocheck.co.uk

ARUN DISTRICT COUNCIL Y/22/14/

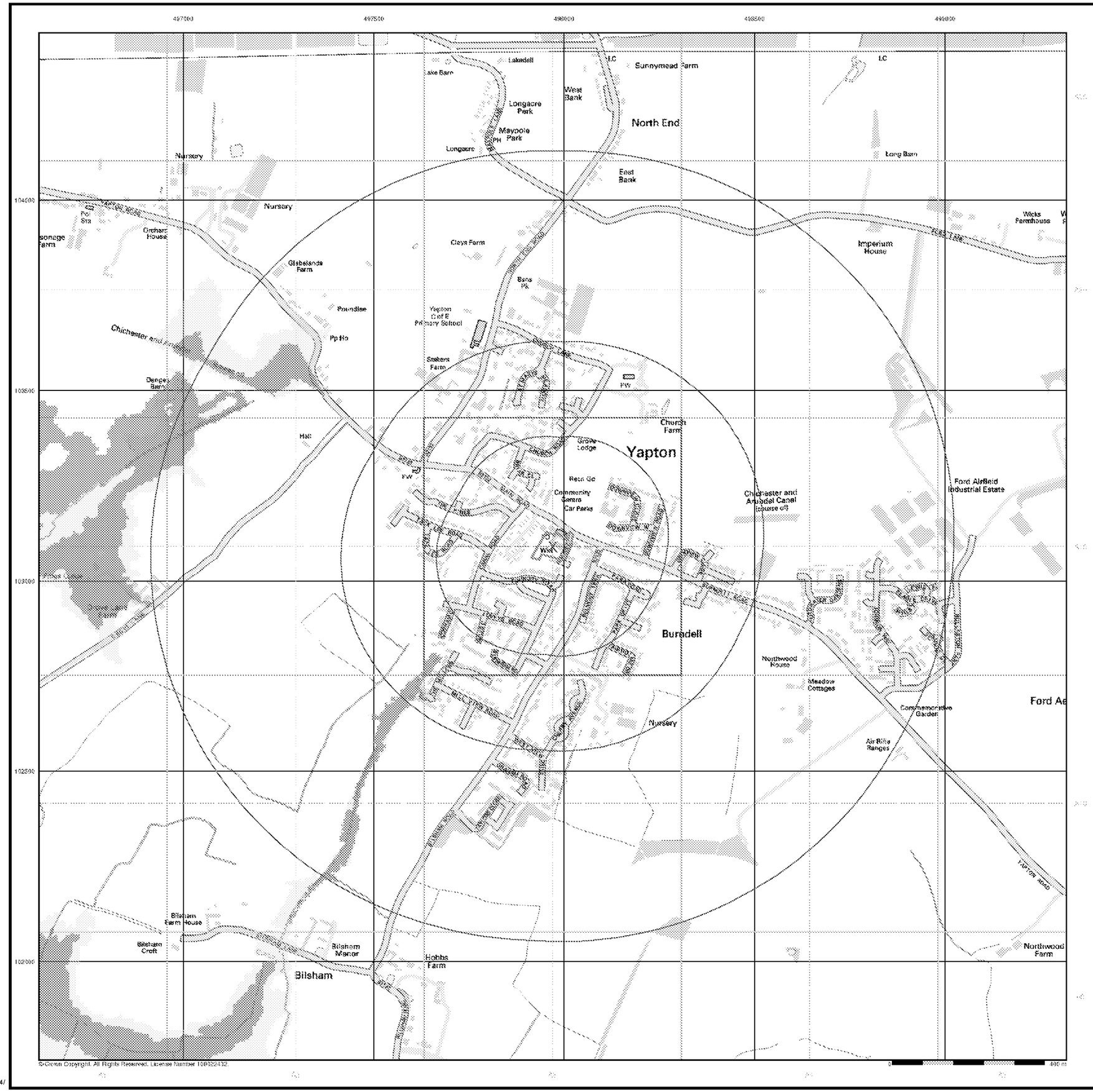

©Crown Copyright. All Rights Reserved. License Number 100022432.

Southern Testing
Environmental & Geotechnical

General

- Specified Site
- Specified Buffer(s)
- Bearing Reference Point

Agency and Hydrological (Flood)

- Extreme Flooding from Rivers or Sea without Defences (Zone 2)
- Flooding from Rivers or Sea without Defences (Zone 3)
- Area Benefiting from Flood Defence
- Flood Water Storage Areas
- Flood Defence

Flood Map - Slice A

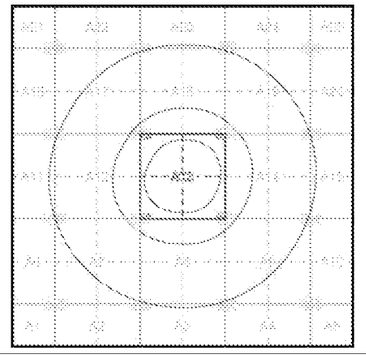

N

Order Details

Order Number:	50942437_1_1
Customer Ref:	DS2535 / SKT
National Grid Reference:	497970, 103090
Slice:	A
Site Area (Ha):	0.5
Search Buffer (m):	1000

Site Details

Land West of Kings Close, Yapton, ARUNDEL, West Sussex, BN18 0EX

Landmark Information Group
Tel: 0844 844 9952
Fax: 0844 844 9951
Web: www.envirocheck.co.uk

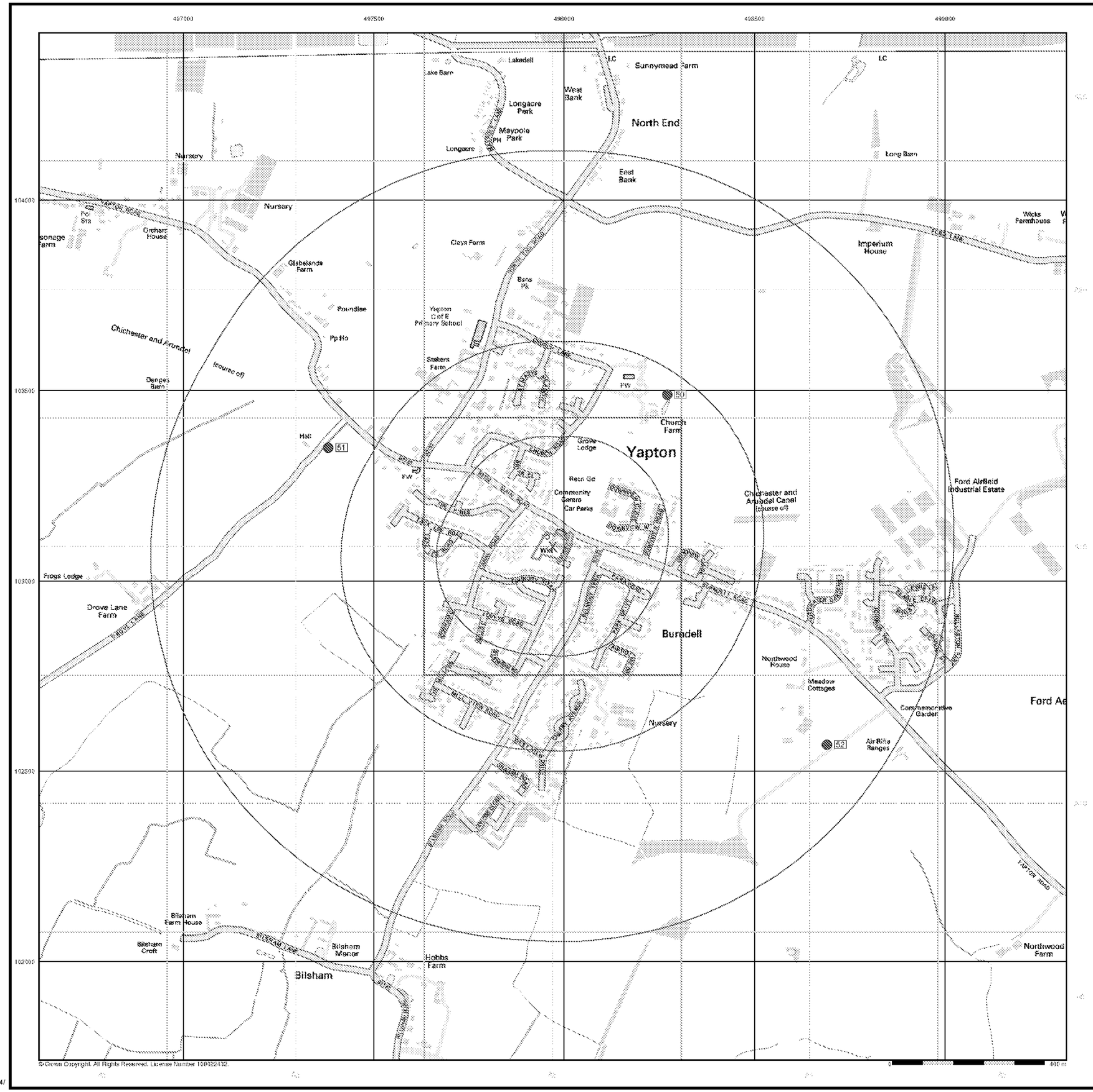

©Crown Copyright. All Rights Reserved. License Number 100022432.

Southern Testing
Environmental & Geotechnical

General

- Specified Site
- Specified Buffer(s)
- Bearing Reference Point
- Map ID
- Several of Type at Location

Agency and Hydrological (Boreholes)

- BGS Borehole Depth 0 - 10m
- BGS Borehole Depth 10 - 30m
- BGS Borehole Depth 30m +
- Confidential
- Other

For Borehole information please refer to the Borehole .csv file which accompanied this slice.

A copy of the BGS Borehole Ordering Form is available to download from the Support section of www.envirocheck.co.uk.

Borehole Map - Slice A

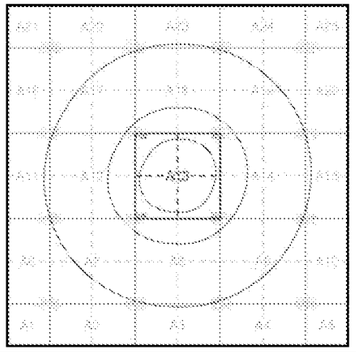

Order Details

Order Number:	50942437_1_1
Customer Ref:	DS2535 / SKT
National Grid Reference:	497970, 103090
Slice:	A
Site Area (Ha):	0.5
Search Buffer (m):	1000

Site Details

Land West of Kings Close, Yapton, ARUNDEL, West Sussex, BN18 0EX

Landmark Information Group
Tel: 0844 844 9952
Fax: 0844 844 9951
Web: www.envirocheck.co.uk

ARUN DISTRICT COUNCIL Y/22/14/

Southern Testing
Environmental & Geotechnical

General

Specified Site Specified Buffer(s) X Bearing Reference Point

Estimated Soil Chemistry Arsenic

Arsenic Concentrations mg/kg

- < 15
- 15 - 25
- 25 - 35
- 35 - 45
- 45 - 60
- 60 - 120
- > 120

Estimated Soil Chemistry Arsenic - Slice A

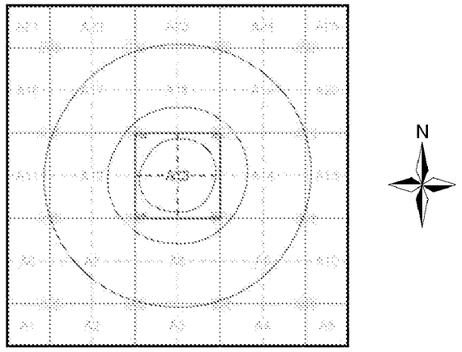

Order Details

Order Details:	50942437_1_1
Customer Ref:	DS2535 / SKT
National Grid Reference:	497970, 103090
Slice:	A
Site Area (Ha):	0.5
Search Buffer (m):	1000

Site Details

Land West of Kings Close, Yapton, ARUNDEL, West Sussex, BN18 0EX

Landmark Information Group
Tel: 0844 844 9952
Fax: 0844 844 9951
Web: www.envirocheck.co.uk

ARUN DISTRICT COUNCIL Y/22/14/

© Crown Copyright. All Rights Reserved. License Number 100022432.

ARUN DISTRICT COUNCIL Y/22/14/

Southern Testing
Environmental & Geotechnical

General

Specified Site   Specified Buffer(s)   Bearing Reference Point

Estimated Soil Chemistry Cadmium

Cadmium Concentrations mg/kg

< 1.8
1.8 - 2.2
2.2 - 3.0
> 3.0

Estimated Soil Chemistry Cadmium - Slice A

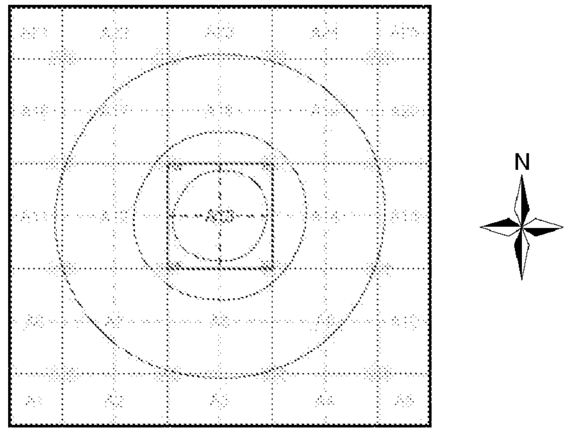

Order Details

Order Details: 50942437_1_1
Customer Ref: DS2535 / SKT
National Grid Reference: 497970, 103090
Slice: A
Site Area (Ha): 0.5
Search Buffer (m): 1000

Site Details

Land West of Kings Close, Yapton, ARUNDEL, West Sussex, BN18 0EX

Landmark

Tel: 0844 844 9952
Fax: 0844 844 9951
Web: www.envirocheck.co.uk

Southern Testing
Environmental & Geotechnical

General

Specified Site Specified Buffer(s) Bearing Reference Point

Estimated Soil Chemistry Chromium

Chromium Concentrations mg/kg

- < 20
- 20 - 40
- 40 - 60
- 60 - 90
- 90 - 120
- 120 - 180
- > 180

Estimated Soil Chemistry Chromium - Slice A

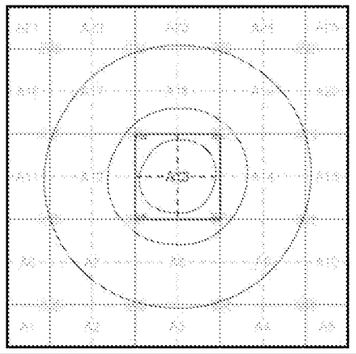

Order Details

Order Details:	50942437_1_1
Customer Ref:	DS2535 / SKT
National Grid Reference:	497970, 103090
Slice:	A
Site Area (Ha):	0.5
Search Buffer (m):	1000

Site Details

Land West of Kings Close, Yapton, ARUNDEL, West Sussex, BN18 0EX

Landmark Information Group
Tel: 0844 844 9952
Fax: 0844 844 9951
Web: www.envirocheck.co.uk

ARUN DISTRICT COUNCIL Y/22/14/

© Crown Copyright. All Rights Reserved. License Number 100022432.

ARUN DISTRICT COUNCIL Y/22/14/

Southern Testing
Environmental & Geotechnical

General

Specified Site   Specified Buffer(s)   Bearing Reference Point

Estimated Soil Chemistry Lead

Lead Concentrations mg/kg

- < 150
- 150 - 300
- 300 - 600
- 600 - 900
- > 900

Estimated Soil Chemistry Lead - Slice A

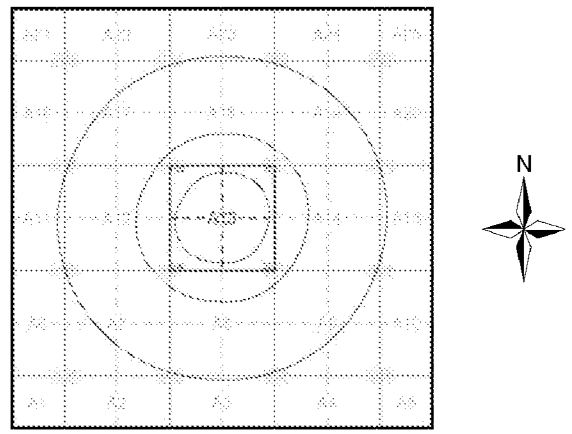

Order Details

Order Details: 50942437_1_1
Customer Ref: DS2535 / SKT
National Grid Reference: 497970, 103090
Slice: A
Site Area (Ha): 0.5
Search Buffer (m): 1000

Site Details

Land West of Kings Close, Yapton, ARUNDEL, West Sussex, BN18 0EX

Landmark
Tel: 0844 844 9952
Fax: 0844 844 9951
Web: www.envirocheck.co.uk

© Crown Copyright. All Rights Reserved. License Number 100022432.

Southern Testing
Environmental & Geotechnical

General

Specified Site   Specified Buffer(s)   Bearing Reference Point

Estimated Soil Chemistry Nickel

Nickel Concentrations mg/kg

- < 15
- 15 - 30
- 30 - 45
- 45 - 60
- 60 - 80
- 80 - 100
- > 100

Estimated Soil Chemistry Nickel - Slice A

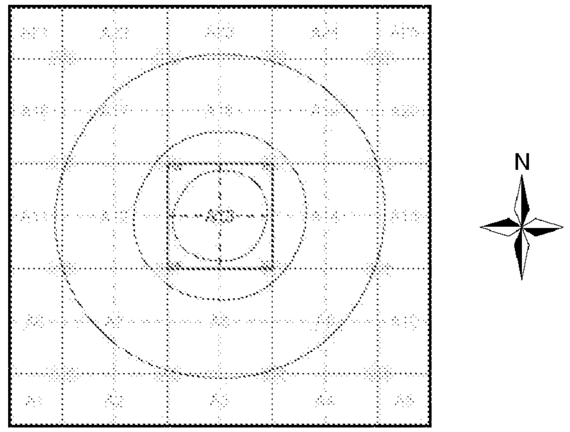

Order Details

Order Details:	50942437_1_1
Customer Ref:	DS2535 / SKT
National Grid Reference:	497970, 103090
Slice:	A
Site Area (Ha):	0.5
Search Buffer (m):	1000

Site Details

Land West of Kings Close, Yapton, ARUNDEL, West Sussex, BN18 0EX

Landmark
Tel: 0844 844 9952
Fax: 0844 844 9951
Web: www.envirocheck.co.uk

Geology 1:50,000 Maps Legends

Superficial Geology

Map Colour	Lex Code	Rock Name	Rock Type	Min and Max Age
	ALV	Alluvium	Clay, Silt, Sand and Gravel	Flandrian - Flandrian
	RTDU	River Terrace Deposits (Undifferentiated)	Sand, Silt and Clay	Quaternary - Quaternary
	RMD	Raised Marine Deposits	Clay, Silt, Sand and Gravel	Quaternary - Quaternary
	RBD1	Raised Beach Deposits, 1	Sand and Gravel	Quaternary - Quaternary
	HEAD	Head	Gravel, Sand, Silt and Clay	Quaternary - Quaternary

Bedrock and Faults

Map Colour	Lex Code	Rock Name	Rock Type	Min and Max Age
	LC	London Clay Formation	Clay, Silt and Sand	Eocene - Eocene
	LMBE	Lambeth Group	Clay, Silt and Sand	Paleocene - Paleocene
	LPCK	Lewes Nodular Chalk Formation, Seaford Chalk Formation, Newhaven Chalk Formation, Culver Chalk Formation and Portsdown Chalk Formation (Undifferentiated)	Chalk	Campanian - Turonian

Southern Testing
Environmental & Geotechnical

Geology 1:50,000 Maps

This report contains geological map extracts taken from the BGS Digital Geological map of Great Britain at 1:50,000 scale and is designed for users carrying out preliminary site assessments who require geological maps for the area around the site. This mapping may be more up to date than previously published paper maps.
The various geological layers - artificial and landslip deposits, superficial geology and solid (bedrock) geology are displayed in separate maps, but superimposed on the final 'Combined Surface Geology' map. All map legends feature on this page. Not all layers have complete nationwide coverage, so availability of data for relevant map sheets is indicated below.

Geology 1:50,000 Maps Coverage

Map ID:	**2**	**Map ID:**	**1**
Map Sheet No:	**317**	**Map Sheet No:**	**332**
Map Name:	**Chichester and I**	**Map Name:**	**Chichester and I**
Map Date:	**1996**	**Map Date:**	**1996**
Bedrock Geology:	**Available**	**Bedrock Geology:**	**Available**
Superficial Geology:	**Available**	**Superficial Geology:**	**Available**
Artificial Geology:	**Available**	**Artificial Geology:**	**Available**
Faults:	**Available**	**Faults:**	**Available**
Landslip:	**Available**	**Landslip:**	**Available**
Rock Segments:	**Not Available**	**Rock Segments:**	**Not Available**

Geology 1:50,000 Maps - Slice A

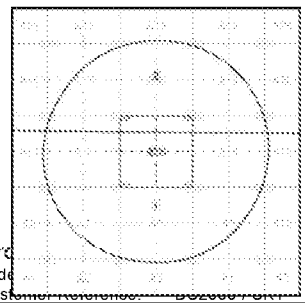

Ord
Orde
Cus

National Grid Reference: 497970, 103090
Slice: A
Site Area (Ha): 0.5
Search Buffer (m): 1000

Site Details:

Land West of Kings Close, Yapton, ARUNDEL, West Sussex, BN18 0EX

Landmark
Tel 0844 844 9952
Fax 0844 844 9951
Web: www.landmarkinfo.co.uk

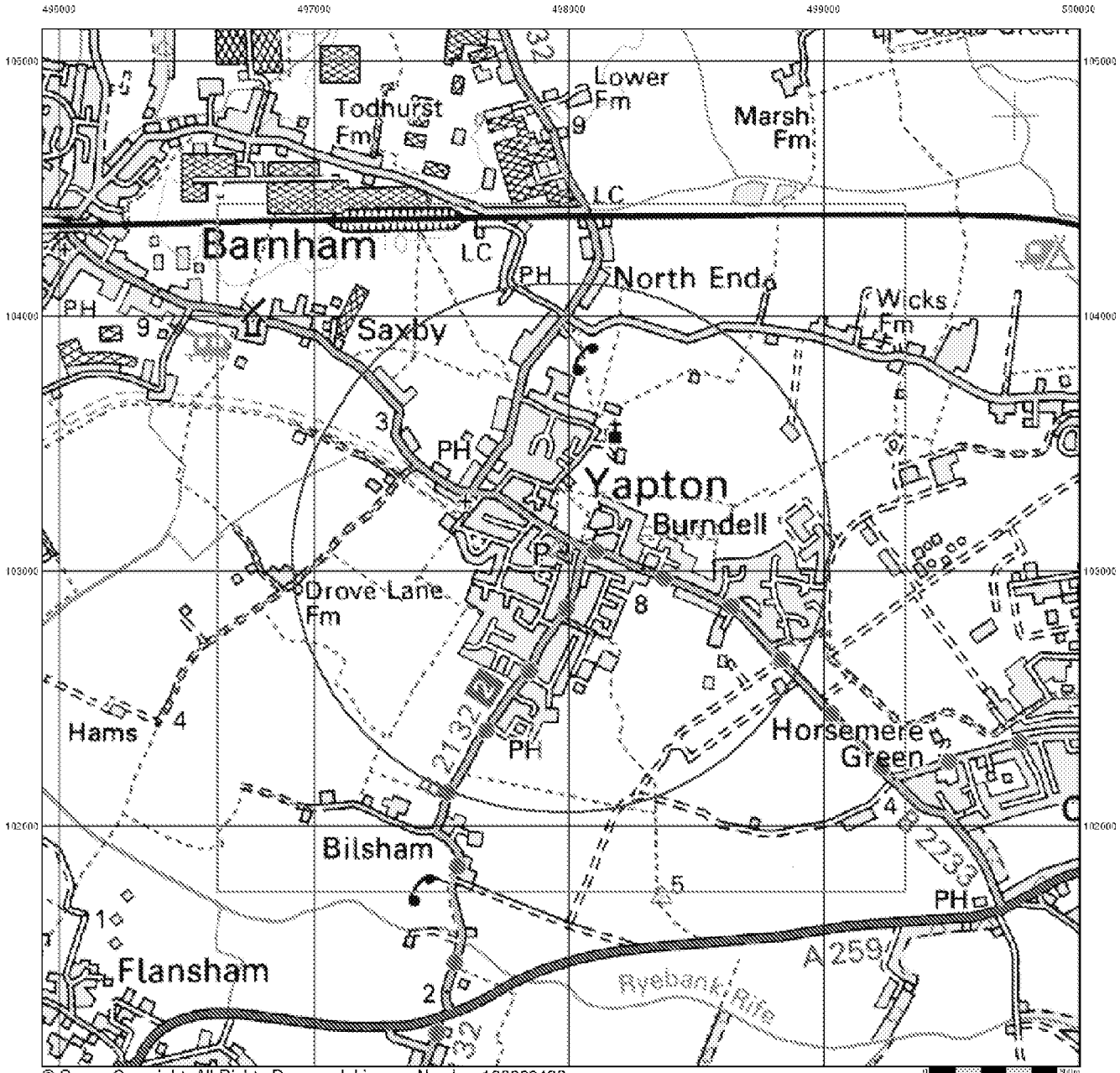

© Crown Copyright. All Rights Reserved. License Number 100022432.

Southern Testing
Environmental & Geotechnical

Artificial Ground and Landslip

Artificial ground is a term used by BGS for those areas where the ground surface has been significantly modified by human activity. Information about previously developed ground is especially important, as it is often associated with potentially contaminated material, unpredictable engineering conditions and unstable ground.

Artificial ground includes:

- Made ground - man-made deposits such as embankments and spoil heaps on the natural ground surface.
- Worked ground - areas where the ground has been cut away such as quarries and road cuttings.
- Infilled ground - areas where the ground has been cut away then wholly or partially backfilled.
- Landscaped ground - areas where the surface has been reshaped.
- Disturbed ground - areas of ill-defined shallow or near surface mineral workings where it is impracticable to map made and worked ground separately.

Mass movement (landslip) deposits on BGS geological maps are primarily superficial deposits that have moved down slope under gravity to form landslips. These affect bedrock, other superficial deposits and artificial ground. The dataset also includes foundered strata, where the ground has collapsed due to subsidence.

Artificial Ground and Landslip Map - Slice A

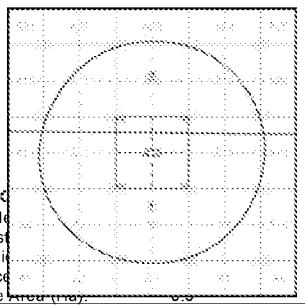

N

Search Buffer (m): 1000

Site Details:

Land West of Kings Close, Yapton, ARUNDEL, West Sussex, BN18 0EX

Landmark

Tel 0844 844 9952
Fax 0844 844 9951
Web: www.landmarkinfo.co.uk

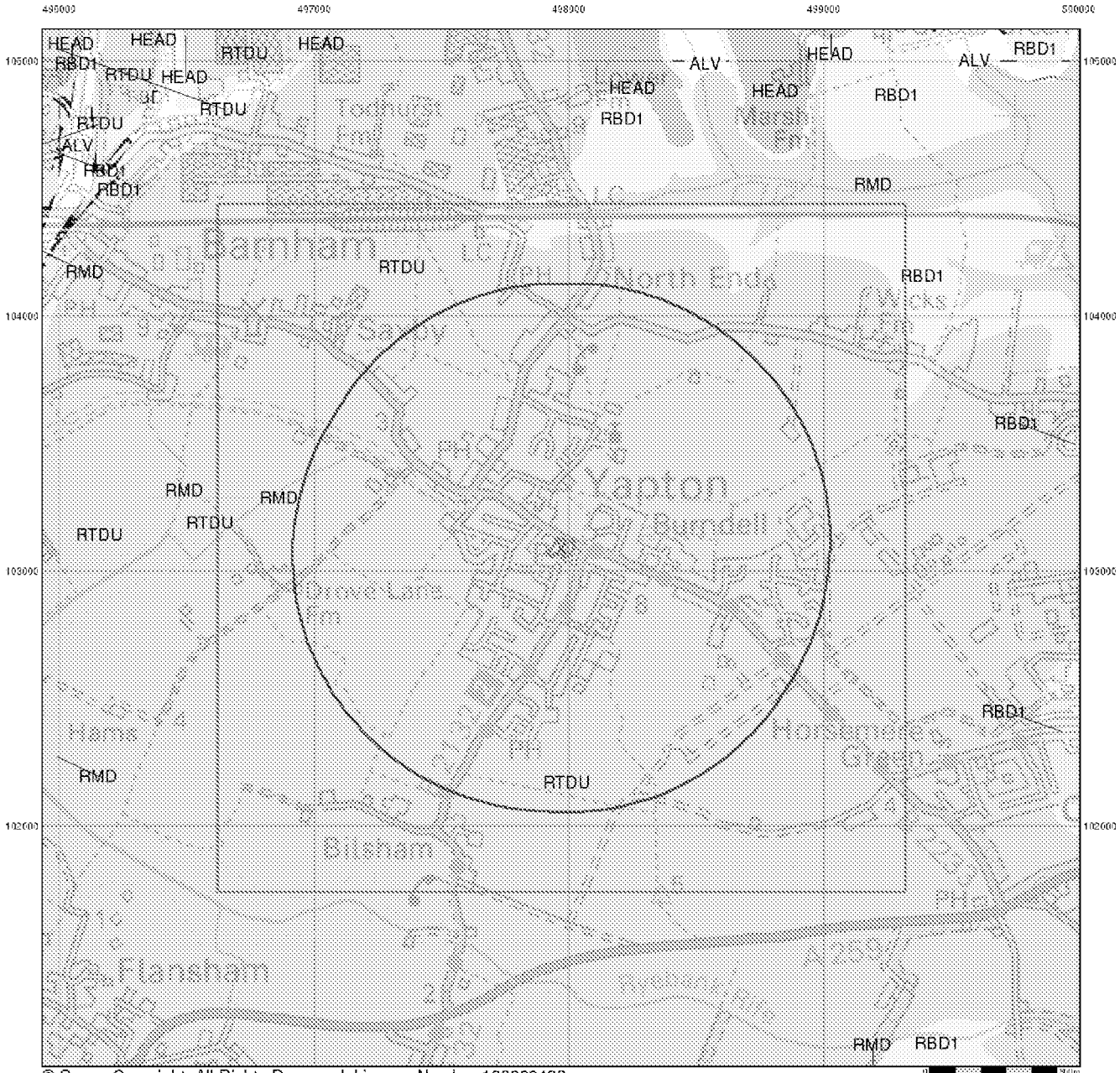

© Crown Copyright. All Rights Reserved. License Number 100022432.

Southern Testing
Environmental & Geotechnical

Superficial Geology

Superficial Deposits are the youngest geological deposits formed during the most recent period of geological time, the Quaternary, which extends back about 1.8 million years from the present.

They rest on older deposits or rocks referred to as Bedrock. This dataset contains Superficial deposits that are of natural origin and 'in place'. Other superficial strata may be held in the Mass Movement dataset where they have been moved, or in the Artificial Ground dataset where they are of man-made origin.

Most of these Superficial deposits are unconsolidated sediments such as gravel, sand, silt and clay, and onshore they form relatively thin, often discontinuous patches or larger spreads.

Superficial Geology Map - Slice A

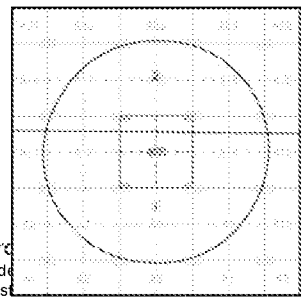

N

Ord
Orde
Cust

National Grid Reference: 497970, 103090
Slice: A
Site Area (Ha): 0.5
Search Buffer (m): 1000

Site Details:

Land West of Kings Close, Yapton, ARUNDEL, West Sussex, BN18 0EX

Landmark
Tel 0844 844 9952
Fax 0844 844 9951
Web: www.envirocheck.co.uk

v15.0 14-Nov-2013

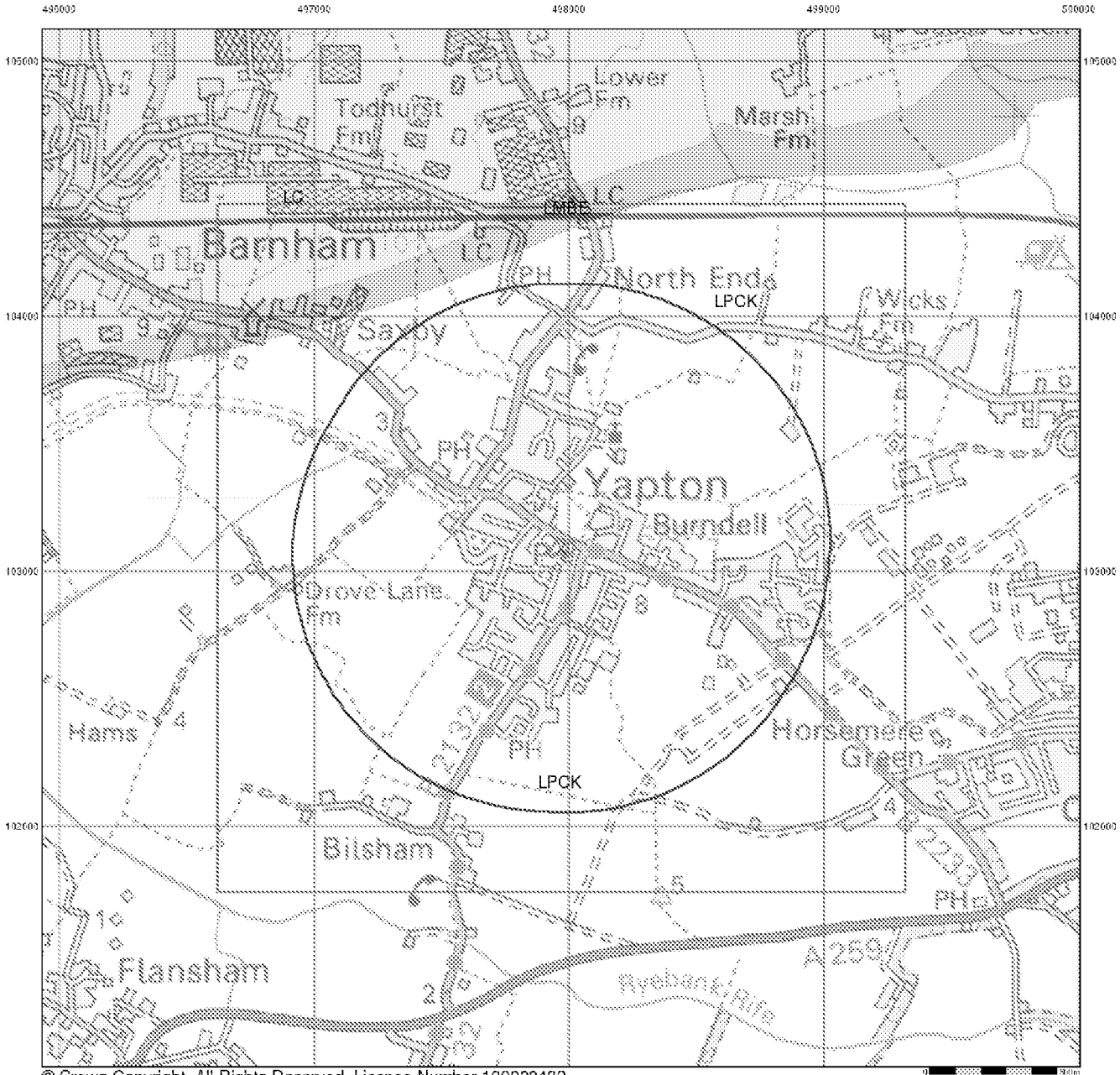

© Crown Copyright. All Rights Reserved. License Number 100022432.

Southern Testing
Environmental & Geotechnical

Bedrock and Faults

Bedrock geology is a term used for the main mass of rocks forming the Earth and are present everywhere, whether exposed at the surface in outcrops or concealed beneath superficial deposits or water.

The bedrock has formed over vast lengths of geological time ranging from ancient and highly altered rocks of the Proterozoic, some 2500 million years ago, or older, up to the relatively young Pliocene, 1.8 million years ago.

The bedrock geology includes many lithologies, often classified into three types based on origin: igneous, metamorphic and sedimentary.

The BGS Faults and Rock Segments dataset includes geological faults (e.g. normal, thrust), and thin beds mapped as lines (e.g. coal seam, gypsum bed). Some of these are linked to other particular 1:50,000 Geology datasets, for example, coal seams are part of the bedrock sequence, most faults and mineral veins primarily affect the bedrock but cut across the strata and post date its deposition.

Bedrock and Faults Map - Slice A

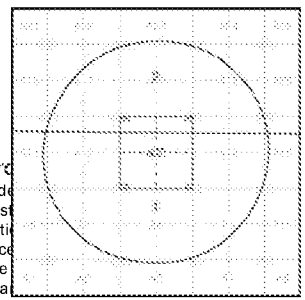

N

Ord
Ord
Cus
Nati
Slic
Site
Sea

Site Details:

Land West of Kings Close, Yapton, ARUNDEL, West Sussex, BN18 0EX

Landmark

Tel 0844 844 9952
Fax 0844 844 9951
Web: www.envirocheck.co.uk

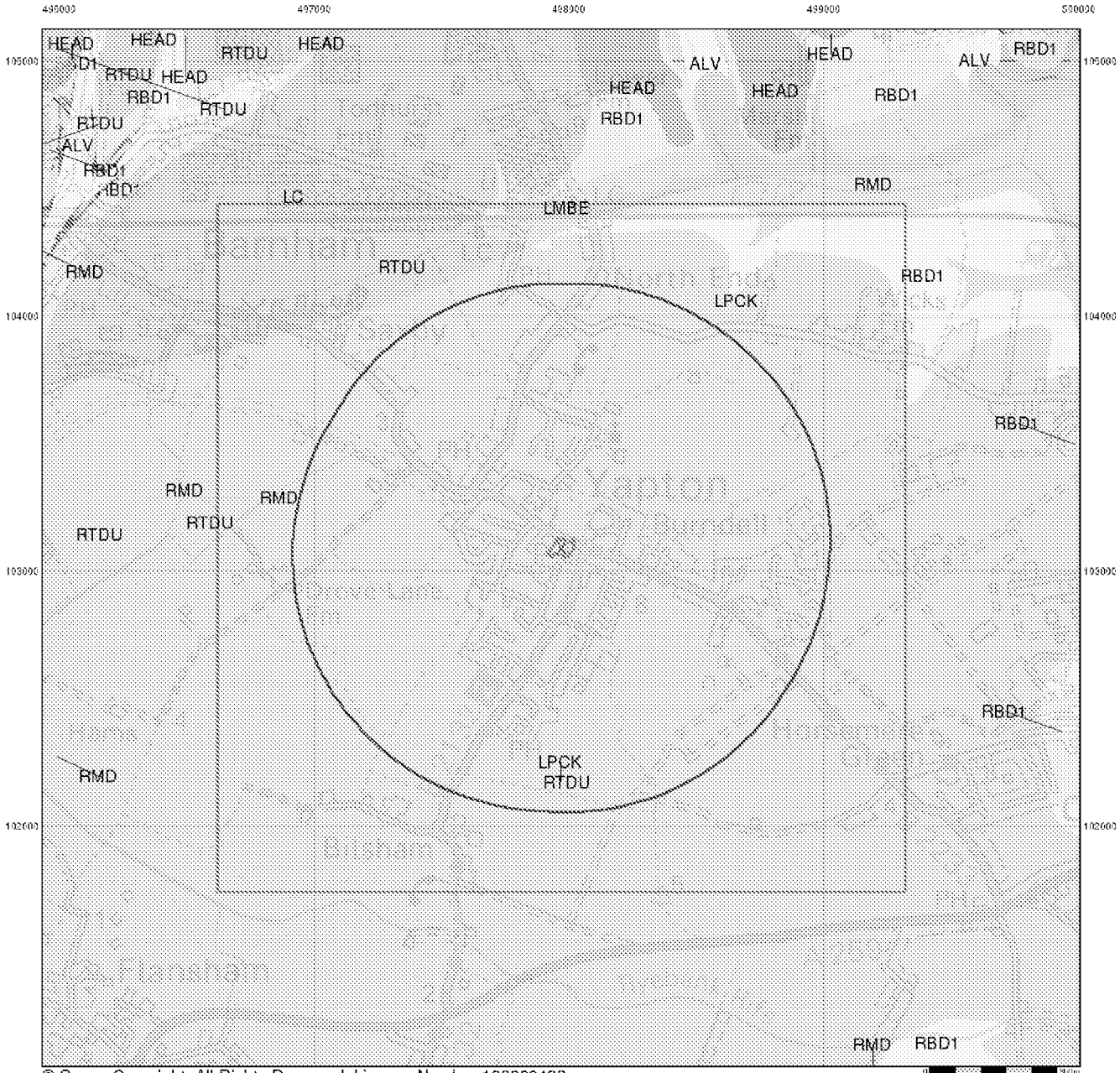

© Crown Copyright. All Rights Reserved. License Number 100022432.

Southern Testing
Environmental & Geotechnical

Combined Surface Geology

The Combined Surface Geology map combines all the previous maps into one combined geological overview of your site.

Please consult the legends to the previous maps to interpret the Combined "Surface Geology" map.

Additional Information

More information on 1:50,000 Geological mapping and explanations of rock classifications can be found on the BGS website. Using the LEX Codes in this report, further descriptions of rock types can be obtained by interrogating the 'BGS Lexicon of Named Rock Units'. This database can be accessed by following the 'Information and Data' link on the BGS website.

Contact

British Geological Survey
Kingsley Dunham Centre
Keyworth
Nottingham
NG12 5GG
Telephone: 0115 936 3143
Fax: 0115 936 3276
email: enquiries@bgs.ac.uk
website: www.bgs.ac.uk

Combined Geology Map - Slice A

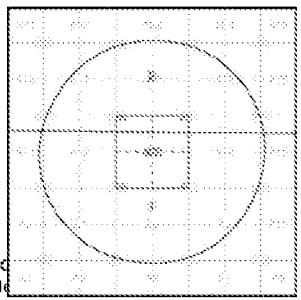

N

Ord
Orde

Customer Reference:	DS2535 / SKT
National Grid Reference:	497970, 103090
Slice:	A
Site Area (Ha):	0.5
Search Buffer (m):	1000

Site Details:

Land West of Kings Close, Yapton, ARUNDEL, West Sussex, BN18 0EX

Landmark
Information Group

Tel 0844 844 9952
Fax 0844 844 9951
Web: www.landmarkinfo.co.uk

Southern Testing
Environmental & Geotechnical

Envirocheck® Report:

Datasheet

Order Details:

Order Number:
50942437_1_1

Customer Reference:
DS2535 / SKT

National Grid Reference:
497970, 103090

Slice:
A

Site Area (Ha):
0.5

Search Buffer (m):
1000

Site Details:

Land West of Kings Close
Yapton
ARUNDEL
West Sussex
BN18 0EX

Client Details:

MR D Spearman
Southern Testing
Keeble House
Stuart Way
East Grinstead
West Sussex
RH19 4QA

Landmark

ARUN DISTRICT COUNCIL Y/22/14/

Contents

Report Section	Page Number
Summary	-
Agency & Hydrological	1
Waste	10
Hazardous Substances	-
Geological	13
Industrial Land Use	17
Sensitive Land Use	23
Data Currency	24
Data Suppliers	28
Useful Contacts	29

Introduction

The Environment Act 1995 has made site sensitivity a key issue, as the legislation pays as much attention to the pathways by which contamination could spread, and to the vulnerable targets of contamination, as it does the potential sources of contamination.
For this reason, Landmark's Site Sensitivity maps and Datasheet(s) place great emphasis on statutory data provided by the Environment Agency and the Scottish Environment Protection Agency; it also incorporates data from Natural England (and the Scottish and Welsh equivalents) and Local Authorities; and highlights hydrogeological features required by environmental and geotechnical consultants. It does not include any information concerning past uses of land. The datasheet is produced by querying the Landmark database to a distance defined by the client from a site boundary provided by the client.

In the attached datasheet the National Grid References (NGRs) are rounded to the nearest 10m in accordance with Landmark's agreements with a number of Data Suppliers.

Copyright Notice

© Landmark Information Group Limited 2013. The Copyright on the information and data and its format as contained in this Envirocheck® Report ("Report") is the property of Landmark Information Group Limited ("Landmark") and several other Data Providers, including (but not limited to) Ordnance Survey, British Geological Survey, the Environment Agency and Natural England, and must not be reproduced in whole or in part by photocopying or any other method. The Report is supplied under Landmark's Terms and Conditions accepted by the Customer.
A copy of Landmark's Terms and Conditions can be found with the Index Map for this report. Additional copies of the Report may be obtained from Landmark, subject to Landmark's charges in force from time to time. The Copyright, design rights and any other intellectual rights shall remain the exclusive property of Landmark and /or other Data providers, whose Copyright material has been included in this Report.

Natural England Copyright Notice

Site of Special Scientific Interest, National Nature Reserve, Ramsar, Special Protection Area, Special Conservation Area, Marine Nature Reserve data (derived from Ordnance Survey 1:10000 raster) is provided by, and used with the permission of, Natural England who retain the copyright and Intellectual Property Rights for the data.

Ove Arup Copyright Notice

The Data provided in this report was obtained on Licence from Ove Arup & Partners Limited (for further information, contact mining.review@arup.com). No reproduction or further use of such Data is to be made without the prior written consent of Ove Arup & Partners Limited. The information and data supplied in the product are derived from publicly available records and other third party sources and neither Ove Arup & Partners nor Landmark warrant the accuracy or completeness of such information or data.

Peter Brett Associates Copyright Notice

The cavity data presented has been extracted from the PBA enhanced version of the original DEFRA national cavity databases. PBA/DEFRA retain the copyright & intellectual property rights in the data. Whilst all reasonable efforts are made to check that the information contained in the cavity databases is accurate we do not warrant that the data is complete or error free. The information is based upon our own researches and those collated from a number of external sources and is continually being augmented and updated by PBA. In no event shall PBA/DEFRA or Landmark be liable for any loss or damage including, without limitation, indirect or consequential loss or damage arising from the use of this data.

Radon Potential dataset Copyright Notice

Information supplied from a joint dataset compiled by The British Geological Survey and Public Health England.

Report Version v47.0

Data Type	Page Number	On Site	0 to 250m	251 to 500m	501 to 1000m (*up to 2000m)
Agency & Hydrological					
Contaminated Land Register Entries and Notices					
Discharge Consents	pg 1			3	5
Enforcement and Prohibition Notices					
Integrated Pollution Controls					
Integrated Pollution Prevention And Control					
Local Authority Integrated Pollution Prevention And Control					
Local Authority Pollution Prevention and Controls	pg 2				2
Local Authority Pollution Prevention and Control Enforcements					
Nearest Surface Water Feature	pg 3			Yes	
Pollution Incidents to Controlled Waters	pg 3			1	
Prosecutions Relating to Authorised Processes					
Prosecutions Relating to Controlled Waters					
Registered Radioactive Substances					
River Quality					
River Quality Biology Sampling Points					
River Quality Chemistry Sampling Points					
Substantiated Pollution Incident Register					
Water Abstractions	pg 3				1 (*21)
Water Industry Act Referrals					
Groundwater Vulnerability	pg 8	Yes	n/a	n/a	n/a
Bedrock Aquifer Designations	pg 8	Yes	n/a	n/a	n/a
Superficial Aquifer Designations	pg 8	Yes	n/a	n/a	n/a
Source Protection Zones					
Extreme Flooding from Rivers or Sea without Defences				n/a	n/a
Flooding from Rivers or Sea without Defences				n/a	n/a
Areas Benefiting from Flood Defences				n/a	n/a
Flood Water Storage Areas				n/a	n/a
Flood Defences				n/a	n/a
Waste					
BGS Recorded Landfill Sites					
Historical Landfill Sites	pg 10			1	1
Integrated Pollution Control Registered Waste Sites					
Licensed Waste Management Facilities (Landfill Boundaries)					
Licensed Waste Management Facilities (Locations)	pg 10			1	1
Local Authority Recorded Landfill Sites	pg 11			1	
Registered Landfill Sites	pg 11			1	
Registered Waste Transfer Sites					
Registered Waste Treatment or Disposal Sites	pg 11			1	1

Summary

Data Type	Page Number	On Site	0 to 250m	251 to 500m	501 to 1000m (*up to 2000m)
Hazardous Substances					
Control of Major Accident Hazards Sites (COMAH)					
Explosive Sites					
Notification of Installations Handling Hazardous Substances (NIHHS)					
Planning Hazardous Substance Consents					
Planning Hazardous Substance Enforcements					
Geological					
BGS 1:625,000 Solid Geology	pg 13	Yes	n/a	n/a	n/a
BGS Estimated Soil Chemistry	pg 13	Yes	Yes		Yes
BGS Recorded Mineral Sites	pg 15		2		
BGS Urban Soil Chemistry					
BGS Urban Soil Chemistry Averages					
Brine Compensation Area			n/a	n/a	n/a
Coal Mining Affected Areas			n/a	n/a	n/a
Mining Instability			n/a	n/a	n/a
Man-Made Mining Cavities					
Natural Cavities					
Non Coal Mining Areas of Great Britain	pg 15	Yes		n/a	n/a
Potential for Collapsible Ground Stability Hazards	pg 15	Yes		n/a	n/a
Potential for Compressible Ground Stability Hazards				n/a	n/a
Potential for Ground Dissolution Stability Hazards	pg 15	Yes		n/a	n/a
Potential for Landslide Ground Stability Hazards	pg 16	Yes		n/a	n/a
Potential for Running Sand Ground Stability Hazards	pg 16	Yes		n/a	n/a
Potential for Shrinking or Swelling Clay Ground Stability Hazards	pg 16	Yes		n/a	n/a
Radon Potential - Radon Affected Areas			n/a	n/a	n/a
Radon Potential - Radon Protection Measures			n/a	n/a	n/a
Industrial Land Use					
Contemporary Trade Directory Entries	pg 17	1	5	7	47
Fuel Station Entries	pg 22			2	

Summary

Data Type	Page Number	On Site	0 to 250m	251 to 500m	501 to 1000m (*up to 2000m)
Sensitive Land Use					
Areas of Adopted Green Belt					
Areas of Unadopted Green Belt					
Areas of Outstanding Natural Beauty					
Environmentally Sensitive Areas					
Forest Parks					
Local Nature Reserves					
Marine Nature Reserves					
National Nature Reserves					
National Parks					
Nitrate Sensitive Areas					
Nitrate Vulnerable Zones	pg 23	1			
Ramsar Sites					
Sites of Special Scientific Interest					
Special Areas of Conservation					
Special Protection Areas					

Map ID	Details	Quadrant Reference (Compass Direction)	Estimated Distance From Site	Contact	NGR
1	**Discharge Consents** Operator: Enterprising Developments Ltd Property Type: Domestic Property (Multiple) Location: New Estate At Belmont Estate, YAPTON Authority: Environment Agency, Southern Region Catchment Area: Not Given Reference: S02741 Permit Version: 1 Effective Date: 1st July 1991 Issued Date: 1st July 1991 Revocation Date: 31st March 1997 Discharge Type: Discharge Of Other Matter-Surface Water Discharge Environment: Freshwater Stream/River Receiving Water: Freshwater River **Status: Lapsed (under Environment Act 1995, Schedule 23)** Positional Accuracy: Located by supplier to within 100m	A8NE (S)	325	1	498110 102750
2	**Discharge Consents** Operator: Ambleside Developments Ltd. Property Type: General Construction Work Location: Residential Development, Off Cherry Lane, Yapton West Sussex Authority: Environment Agency, Southern Region Catchment Area: Not Given Reference: S02208 Permit Version: 1 Effective Date: 21st August 1973 Issued Date: 21st August 1973 Revocation Date: 31st March 1997 Discharge Type: Discharge Of Other Matter-Surface Water Discharge Environment: Freshwater Stream/River Receiving Water: Freshwater River **Status: Lapsed (under Environment Act 1995, Schedule 23)** Positional Accuracy: Located by supplier to within 100m	A8NE (S)	366	1	498090 102700
3	**Discharge Consents** Operator: Ambleside Developments Ltd. Property Type: General Construction Work Location: Residential Development, Off Cherry Lane, Yapton West Sussex Authority: Environment Agency, Southern Region Catchment Area: Not Given Reference: S02208 Permit Version: 1 Effective Date: 21st August 1973 Issued Date: 21st August 1973 Revocation Date: 31st March 1997 Discharge Type: Discharge Of Other Matter-Surface Water Discharge Environment: Freshwater Stream/River Receiving Water: Freshwater River **Status: Lapsed (under Environment Act 1995, Schedule 23)** Positional Accuracy: Located by supplier to within 100m	A8NE (S)	485	1	498030 102570
4	**Discharge Consents** Operator: R. Taylor Esq. Property Type: Undefined Or Other Location: Bilsham Road, Yapton West Sussex Authority: Environment Agency, Southern Region Catchment Area: Not Supplied Reference: S01639 Permit Version: 1 Effective Date: 6th October 1967 Issued Date: 6th October 1967 Revocation Date: 1st July 1991 Discharge Type: Discharge Of Other Matter-Surface Water Discharge Environment: Freshwater Stream/River Receiving Water: Freshwater River **Status: Pre National Rivers Authority Legislation where issue date < 01/09/1989** Positional Accuracy: Located by supplier to within 10m	A8NW (S)	586	1	497830 102480

ARUN DISTRICT COUNCIL Y/22/14/

Map ID	Details	Quadrant Reference (Compass Direction)	Estimated Distance From Site	Contact	NGR
4	**Discharge Consents** Operator: R. Taylor Esq. Property Type: Undefined Or Other Location: Bilsham Road, Yapton West Sussex Authority: Environment Agency, Southern Region Catchment Area: Not Supplied Reference: S01639 Permit Version: 1 Effective Date: 6th October 1967 Issued Date: 6th October 1967 Revocation Date: 1st July 1991 Discharge Type: Discharge Of Other Matter-Surface Water Discharge Environment: Freshwater Stream/River Receiving Water: Freshwater River **Status: Pre National Rivers Authority Legislation where issue date < 01/09/1989** Positional Accuracy: Located by supplier to within 10m	A8NW (S)	601	1	497860 102460
5	**Discharge Consents** Operator: R. Taylor Esq. Property Type: Undefined Or Other Location: Bilsham Road, Yapton West Sussex Authority: Environment Agency, Southern Region Catchment Area: Not Supplied Reference: S01639 Permit Version: 1 Effective Date: 6th October 1967 Issued Date: 6th October 1967 Revocation Date: 1st July 1991 Discharge Type: Discharge Of Other Matter-Surface Water Discharge Environment: Freshwater Stream/River Receiving Water: Freshwater River **Status: Pre National Rivers Authority Legislation where issue date < 01/09/1989** Positional Accuracy: Located by supplier to within 10m	A8NW (S)	637	1	497900 102420
6	**Discharge Consents** Operator: A W Bone Esq Property Type: Domestic Property (Single) Location: Bilsham Bar, Bilsham Lane, YAPTON, West Sussex Authority: Environment Agency, Southern Region Catchment Area: Not Given Reference: P00836 Permit Version: 1 Effective Date: 11th May 1987 Issued Date: 11th May 1987 Revocation Date: Not Supplied Discharge Type: Sewage Discharges - Final/Treated Effluent - Not Water Company Discharge Environment: Freshwater Stream/River Receiving Water: Freshwater River **Status: Pre National Rivers Authority Legislation where issue date < 01/09/1989** Positional Accuracy: Located by supplier to within 100m	A7SE (SW)	949	1	497440 102240
7	**Discharge Consents** Operator: Mr Richard Hocking Property Type: Mixed Farming Location: Drove Lane Farm, Yapton, Arundel, West Sussex, Bn18 0eb Authority: Environment Agency, Southern Region Catchment Area: Not Supplied Reference: App/So/107su Permit Version: 1 Effective Date: 1st April 1999 Issued Date: 1st April 1999 Revocation Date: Not Supplied Discharge Type: Trade Discharge - Process Water Discharge Environment: Into Land Receiving Water: Into Land **Status: New Consent (Water Resources Act 1991, Section 88 & Schedule 10 as amended by Environment Act 1995)** Positional Accuracy: Located by supplier to within 10m	A11SE (W)	984	1	496940 102930
8	**Local Authority Pollution Prevention and Controls** Name: Complete Workwear Services Ltd Location: Unit 1 Block C, Ford Industrial Estate, Yapton, Arundel, BN18 0HY Authority: Arun District Council, Environmental Health Department Permit Reference: 10594 Dated: Not Supplied Process Type: Local Authority Pollution Prevention and Control Description: Part B process (no specific reference) **Status: Permitted** Positional Accuracy: Manually positioned to the address or location	A14NE (E)	904	2	498927 103133

ARUN DISTRICT COUNCIL Y/22/14/

Map ID	Details	Quadrant Reference (Compass Direction)	Estimated Distance From Site	Contact	NGR
9	**Local Authority Pollution Prevention and Controls** Name: Tarmac Topblock Ltd Location: Hangers 1 & 2, Ford Airfield Industrial Estate, Ford, ARUNDEL, West Sussex, BN18 0HY Authority: Arun District Council, Environmental Health Department Permit Reference: Ppc/2/04 Dated: 23rd October 1992 Process Type: Local Authority Pollution Prevention and Control Description: PG3/1Blending, packing, loading and use of bulk cement **Status: Authorisation revokedRevoked** Positional Accuracy: Manually positioned within the geographical locality	A14SE (E)	910	2	498932 103074
	Nearest Surface Water Feature	A14NW (E)	341	-	498364 103104
10	**Pollution Incidents to Controlled Waters** Property Type: Agricultural Location: Rear Of Cinders Lane Nursery, YAPTON Authority: Environment Agency, Southern Region Pollutant: Oils - Diesel (Including Agricultural) Note: Red Diesel In Ditch; Horticultural Incident Date: 27th February 1995 Incident Reference: 1232 Catchment Area: Not Given Receiving Water: Not Given Cause of Incident: Oils/Related Products Incident Severity: Category 3 - Minor Incident Positional Accuracy: Located by supplier to within 100m	A8NE (SE)	445	1	498250 102690
11	**Water Abstractions** Operator: Mr A Clay Esq Licence Number: 10/41/411007 Permit Version: 100 Location: The Streddles, North End Road, Yapton Authority: Environment Agency, Southern Region Abstraction: Agriculture: Horticultural Watering Abstraction Type: Water may be abstracted from a single point Source: Groundwater Daily Rate (m3): Not Supplied Yearly Rate (m3): Not Supplied Details: See Licence Map Authorised Start: 01 April Authorised End: 31 March Permit Start Date: 18th July 1979 Permit End Date: Not Supplied Positional Accuracy: Located by supplier to within 100m	A18NW (N)	711	1	497840 103830
	Water Abstractions Operator: Keith Langmead Ltd Licence Number: 10/41/412007 Permit Version: 101 Location: Wicks Farm, Ford Authority: Environment Agency, Southern Region Abstraction: General Agriculture: Spray Irrigation - Direct Abstraction Type: Water may be abstracted from a single point Source: Groundwater Daily Rate (m3): Not Supplied Yearly Rate (m3): Not Supplied Details: See Licence Map Authorised Start: 01 June Authorised End: 30 September Permit Start Date: 8th June 2009 Permit End Date: Not Supplied Positional Accuracy: Located by supplier to within 10m	A19NE (NE)	1114	1	498790 103930
	Water Abstractions Operator: Mr A C Langmead Esq Licence Number: 10/41/412007 Permit Version: 100 Location: Wicks Farm, Ford Authority: Environment Agency, Southern Region Abstraction: General Agriculture: Spray Irrigation - Direct Abstraction Type: Water may be abstracted from a single point Source: Groundwater Daily Rate (m3): Not Supplied Yearly Rate (m3): Not Supplied Details: See Licence Map Authorised Start: 01 June Authorised End: 30 September Permit Start Date: 30th May 1989 Permit End Date: Not Supplied Positional Accuracy: Located by supplier to within 100m	A19NE (NE)	1114	1	498790 103930

Map ID	Details	Quadrant Reference (Compass Direction)	Estimated Distance From Site	Contact	NGR
	Water Abstractions Operator: Adviserate T/A Southdown Flowers Licence Number: 412002 Permit Version: Not Supplied Location: Adviserate Limited Authority: Environment Agency, Southern Region Abstraction: Spray Irrigation Abstraction Type: Not Supplied Source: Surface Daily Rate (m3): 68 Yearly Rate (m3): 18181 Details: Todhurst Rife (Trib Arun) Authorised Start: Not Supplied Authorised End: Not Supplied Permit Start Date: Not Supplied Permit End Date: Not Supplied Positional Accuracy: Located by supplier to within 100m	A23SE (N)	1272	1	498000 104400
	Water Abstractions Operator: Fresh Acres Nurseries Ltd Licence Number: 10/41/412002 Permit Version: 100 Location: Todhurst Rife At Yapton Lane, Walberton Authority: Environment Agency, Southern Region Abstraction: General Agriculture: Spray Irrigation - Direct Abstraction Type: Water may be abstracted from a river or stream reach, or a row of wellpoints Source: Surface Daily Rate (m3): 68 Yearly Rate (m3): 18181.6 Details: See Licence Map Authorised Start: 01 April Authorised End: 31 March Permit Start Date: 29th June 1998 Permit End Date: Not Supplied Positional Accuracy: Located by supplier to within 100m	A23NW (N)	1469	1	497730 104580
	Water Abstractions Operator: Mr A Langmead Licence Number: 10/41/412004 Permit Version: 100 Location: Wicks Farm, Yapton Authority: Environment Agency, Southern Region Abstraction: General Farming And Domestic Abstraction Type: Water may be abstracted from a single point Source: Groundwater Daily Rate (m3): Not Supplied Yearly Rate (m3): Not Supplied Details: See Licence Map Authorised Start: 01 April Authorised End: 31 March Permit Start Date: 2nd April 1987 Permit End Date: Not Supplied Positional Accuracy: Located by supplier to within 100m	A20NE (NE)	1526	1	499330 103910
	Water Abstractions Operator: Tarmac Ltd Licence Number: 27/198 Permit Version: 1 Location: Ford Industrial Estate, Arundel Authority: Environment Agency, Southern Region Abstraction: Construction: Process Water Abstraction Type: Water may be abstracted from a single point Source: Groundwater Daily Rate (m3): Not Supplied Yearly Rate (m3): Not Supplied Details: Outlined In Black On Attached Map Authorised Start: 01 January Authorised End: 31 December Permit Start Date: 4th January 2001 Permit End Date: Not Supplied Positional Accuracy: Located by supplier to within 10m	A15NE (E)	1530	1	499530 103390

Map ID	Details	Quadrant Reference (Compass Direction)	Estimated Distance From Site	Contact	NGR
	Water Abstractions Operator: Tarmac Heavy Building Materials Ltd Licence Number: 27/196 Permit Version: 1 Location: Ford Industrial Estate, Arundel Authority: Environment Agency, Southern Region Abstraction: Construction: Process Water Abstraction Type: Water may be abstracted from a single point Source: Groundwater Daily Rate (m3): Not Supplied Yearly Rate (m3): Not Supplied Details: Outlined On Licence Map Authorised Start: 13 March Authorised End: 31 December Permit Start Date: 13th March 2000 Permit End Date: Not Supplied Positional Accuracy: Located by supplier to within 10m	A15NE (E)	1530	1	499530 103390
	Water Abstractions Operator: Mr R Lonsdale Licence Number: 10/41/542008 Permit Version: 101 Location: Point A At Tile Barn Farm,Barnham Authority: Environment Agency, Southern Region Abstraction: General Agriculture: Spray Irrigation - Direct Abstraction Type: Water may be abstracted from a single point Source: Groundwater Daily Rate (m3): Not Supplied Yearly Rate (m3): Not Supplied Details: Water Abstracted Shall Be Used On Land And Buildings In The Occupation Of The Licence Holder At Tile Barn Farm Authorised Start: 01 April Authorised End: 30 September Permit Start Date: 17th January 2008 Permit End Date: Not Supplied Positional Accuracy: Located by supplier to within 10m	A16SW (W)	1585	1	496460 103690
	Water Abstractions Operator: Mr R Lonsdale Licence Number: 10/41/542008 Permit Version: 100 Location: Point A At Tile Barn Farm,Barnham Authority: Environment Agency, Southern Region Abstraction: General Agriculture: Spray Irrigation - Direct Abstraction Type: Water may be abstracted from a single point Source: Groundwater Daily Rate (m3): Not Supplied Yearly Rate (m3): Not Supplied Details: Water Abstracted Shall Be Used On Land And Buildings In The Occupation Of The Licence Holder At Tile Barn Farm Authorised Start: 01 April Authorised End: 30 September Permit Start Date: 14th January 1974 Permit End Date: Not Supplied Positional Accuracy: Located by supplier to within 100m	A16SW (W)	1585	1	496460 103690
	Water Abstractions Operator: Star Nurseries Ltd Licence Number: 27/176 Permit Version: 100 Location: Todhurst Rife At Star Nurseries, Barnham Authority: Environment Agency, Southern Region Abstraction: Horticulture and Nurseries: Spray Irrigation - Spray Irrigation Definition Order Abstraction Type: Water may be abstracted from a single point Source: Surface Daily Rate (m3): Not Supplied Yearly Rate (m3): Not Supplied Details: Outlined On Map Authorised Start: 01 January Authorised End: 31 December Permit Start Date: 16th June 2009 Permit End Date: Not Supplied Positional Accuracy: Located by supplier to within 100m	A23NW (N)	1592	1	497700 104700

ARUN DISTRICT COUNCIL Y/22/14/

Map ID	Details	Quadrant Reference (Compass Direction)	Estimated Distance From Site	Contact	NGR
	Water Abstractions Operator: Keith Langmead Ltd Licence Number: 27/190 Permit Version: 102 Location: Point A On Binstead Rife, Wicks Farm, Yapton Authority: Environment Agency, Southern Region Abstraction: General Agriculture: Spray Irrigation - Storage Abstraction Type: Water may be abstracted from a single point Source: Surface Daily Rate (m3): Not Supplied Yearly Rate (m3): Not Supplied Details: Shown Outlined In Red On Licence Map Authorised Start: 01 November Authorised End: 31 March Permit Start Date: 16th June 2009 Permit End Date: Not Supplied Positional Accuracy: Located by supplier to within 10m	A24NE (NE)	1595	1	498810 104510
	Water Abstractions Operator: Keith Langmead Ltd Licence Number: 27/190 Permit Version: 101 Location: Point A On Binstead Rife, Wicks Farm, Yapton Authority: Environment Agency, Southern Region Abstraction: General Agriculture: Spray Irrigation - Storage Abstraction Type: Water may be abstracted from a single point Source: Surface Daily Rate (m3): Not Supplied Yearly Rate (m3): Not Supplied Details: Shown Outlined In Black On Licence Map Authorised Start: 01 November Authorised End: 31 March Permit Start Date: 1st April 2001 Permit End Date: Not Supplied Positional Accuracy: Located by supplier to within 10m	A24NE (NE)	1595	1	498810 104510
	Water Abstractions Operator: A.C. Langmead Ltd Licence Number: 27/190 Permit Version: 100 Location: Point A On Binstead Rife, Wicks Farm, Yapton Authority: Environment Agency, Southern Region Abstraction: General Agriculture: Spray Irrigation - Storage Abstraction Type: Water may be abstracted from a single point Source: Surface Daily Rate (m3): Not Supplied Yearly Rate (m3): Not Supplied Details: Shown Outlined In Black On Licence Map Authorised Start: 01 November Authorised End: 31 March Permit Start Date: 16th August 1996 Permit End Date: Not Supplied Positional Accuracy: Located by supplier to within 100m	A24NE (NE)	1595	1	498810 104510
	Water Abstractions Operator: Eric Wall Holdings Ltd Licence Number: 10/41/542208 Permit Version: 100 Location: Point B, Lake Lane,Barnham Authority: Environment Agency, Southern Region Abstraction: Horticulture And Nurseries: Spray Irrigation - Direct Abstraction Type: Water may be abstracted from a single point Source: Groundwater Daily Rate (m3): Not Supplied Yearly Rate (m3): Not Supplied Details: The Water Abstracted Shall Only Be Used On Land And Buildings On The Occupation Of The Licence Holder At Lake Lane,Barnham Authorised Start: 01 January Authorised End: 31 December Permit Start Date: 10th June 2009 Permit End Date: Not Supplied Positional Accuracy: Located by supplier to within 100m	A22NW (NW)	1679	1	497110 104580

Map ID	Details	Quadrant Reference (Compass Direction)	Estimated Distance From Site	Contact	NGR
	Water Abstractions Operator: I R Gibbs Licence Number: 10/41/542011 Permit Version: 100 Location: Points C&D At Ryebank Rife,Middleton Authority: Environment Agency, Southern Region Abstraction: General Agriculture: Spray Irrigation - Storage Abstraction Type: Water may be abstracted from a river or stream reach, or a row of wellpoints Source: Surface Daily Rate (m3): Not Supplied Yearly Rate (m3): Not Supplied Details: For Spray Irrigation Within Land Bodly Marked Authorised Start: 01 November Authorised End: 31 March Permit Start Date: 10th June 2009 Permit End Date: Not Supplied Positional Accuracy: Located by supplier to within 100m	(S)	1683	1	498000 101370
	Water Abstractions Operator: I R Gibbs Licence Number: 10/41/542011 Permit Version: 100 Location: Points A&B At Ryebank Rife,Middleton Authority: Environment Agency, Southern Region Abstraction: General Agriculture: Spray Irrigation - Storage Abstraction Type: Water may be abstracted from a river or stream reach, or a row of wellpoints Source: Surface Daily Rate (m3): 45 Yearly Rate (m3): 4550 Details: For Spray Irrigation Within Land Bodly Marked Authorised Start: 01 November Authorised End: 31 March Permit Start Date: 10th June 2009 Permit End Date: Not Supplied Positional Accuracy: Located by supplier to within 100m	(S)	1811	1	497800 101250
	Water Abstractions Operator: D Tristram T/A Walberton Nurseries Licence Number: 10/41/412006 Permit Version: 100 Location: Todhurst Barn, Yapton Lane, Walberton Authority: Environment Agency, Southern Region Abstraction: Agriculture: Horticultural Watering Abstraction Type: Water may be abstracted from a single point Source: Groundwater Daily Rate (m3): Not Supplied Yearly Rate (m3): Not Supplied Details: See Licence Map Authorised Start: 01 April Authorised End: 30 September Permit Start Date: 1st April 2008 Permit End Date: Not Supplied Positional Accuracy: Located by supplier to within 100m	(N)	1873	1	497610 104970
	Water Abstractions Operator: Eric Wall Holdings Ltd Licence Number: 10/41/542208 Permit Version: 100 Location: Point A, Lake Lane,Barnham Authority: Environment Agency, Southern Region Abstraction: Horticulture And Nurseries: Spray Irrigation - Direct Abstraction Type: Water may be abstracted from a single point Source: Groundwater Daily Rate (m3): 545 Yearly Rate (m3): 100000 Details: The Water Abstracted Shall Only Be Used On Land And Buildings On The Occupation Of The Licence Holder At Lake Lane,Barnham Authorised Start: 01 January Authorised End: 31 December Permit Start Date: 10th June 2009 Permit End Date: Not Supplied Positional Accuracy: Located by supplier to within 100m	A21NE (NW)	1885	1	496740 104570

ARUN DISTRICT COUNCIL Y/22/14/

Map ID	Details	Quadrant Reference (Compass Direction)	Estimated Distance From Site	Contact	NGR
	Water Abstractions Operator: Langmead Farms Ltd Licence Number: 27/209 Permit Version: 1 Location: Ryebank Rife, Point A - Bilsham Authority: Environment Agency, Southern Region Abstraction: General Agriculture: Spray Irrigation - Storage Abstraction Type: Water may be abstracted from a single point Source: Surface Daily Rate (m3): Not Supplied Yearly Rate (m3): Not Supplied Details: Not Supplied Authorised Start: 01 November Authorised End: 31 March Permit Start Date: 16th June 2009 Permit End Date: Not Supplied Positional Accuracy: Located by supplier to within 10m	A1NW (SW)	1960	1	496390 101830
	Water Abstractions Operator: The Donald Langmead Partnership Licence Number: 10/41/541002 Permit Version: 100 Location: Point 2 At Shripney Farm & Flansham Farm Authority: Environment Agency, Southern Region Abstraction: General Farming And Domestic Abstraction Type: Water may be abstracted from a single point Source: Groundwater Daily Rate (m3): Not Supplied Yearly Rate (m3): Not Supplied Details: Water Abstracted Shall Be Used On Land And Buildings In The Occupation Of The Licence Holder At Shripney And Flansham Authorised Start: 01 January Authorised End: 31 December Permit Start Date: 21st March 2001 Permit End Date: Not Supplied Positional Accuracy: Located by supplier to within 100m	A1NW (SW)	1967	1	496440 101760
	Water Abstractions Operator: R Hague, Esq Licence Number: 412001 Permit Version: Not Supplied Location: New House Farm, FORD Authority: Environment Agency, Southern Region Abstraction: Agriculture (General) Abstraction Type: Not Supplied Source: Groundwater Daily Rate (m3): 9 Yearly Rate (m3): 1659.1 Details: H5 Chalk Authorised Start: Not Supplied Authorised End: Not Supplied Permit Start Date: Not Supplied Permit End Date: Not Supplied Positional Accuracy: Located by supplier to within 100m	(E)	1989	1	499930 103690
	Groundwater Vulnerability Soil Classification: Soils of Intermediate Leaching Potential (I1) - Soils which can possibly transmit a wide range of pollutants Map Sheet: Sheet 45 West Sussex and Surrey Scale: 1:100,000	A13SE (SE)	0	1	497971 103090
	Drift Deposits None				
	Bedrock Aquifer Designations Aquifer Desination: Principal Aquifer	A13SE (SE)	0	3	497971 103090
	Superficial Aquifer Designations Aquifer Designation: Secondary Aquifer - A	A13SE (SE)	0	3	497971 103090
	Extreme Flooding from Rivers or Sea without Defences None				
	Flooding from Rivers or Sea without Defences None				
	Areas Benefiting from Flood Defences None				
	Flood Water Storage Areas None				

Map ID	Details	Quadrant Reference (Compass Direction)	Estimated Distance From Site	Contact	NGR
	Flood Defences None				

Map ID	Details	Quadrant Reference (Compass Direction)	Estimated Distance From Site	Contact	NGR
12	**Historical Landfill Sites** Licence Holder: A C Langmead Location: Yapton, Sussex Name: Disused Canal at Yapton Operator Location: Not Supplied Boundary Accuracy: As Supplied Provider Reference: EAHLD20084 First Input Date: 31st December 1980 Last Input Date: 26th March 1981 Specified Waste Type: Deposited Waste included Inert Waste EA Waste Ref: 0 Regis Ref: Not Supplied WRC Ref: 3800/8018 BGS Ref: Not Supplied Other Ref: WD27/243, WD13/66	A14NW (E)	285	1	498308 103137
13	**Historical Landfill Sites** Licence Holder: Not Supplied Location: Barnham, Sussex Name: Disused Canal at Barnham Operator Location: Not Supplied Boundary Accuracy: As Supplied Provider Reference: EAHLD20083 First Input Date: 31st December 1970 Last Input Date: 31st December 1970 Specified Waste Type: Deposited Waste included Inert Waste EA Waste Ref: 0 Regis Ref: Not Supplied WRC Ref: 3800/8225 BGS Ref: Not Supplied Other Ref: WD27/023	A12NE (NW)	632	1	497375 103390
14	**Licensed Waste Management Facilities (Locations)** Licence Number: 100156 Location: Northwood Farm (Hanger No8), Burndell Road, Yapton, West Sussex, BN18 0HR Operator Name: T J Waste & Recycling Limited Operator Location: Not Supplied Authority: Environment Agency - South East Region, Solent & South Downs Area Site Category: Household, Commercial And Industrial Transfer Stations **Licence Status: Modified** Issued: 28th January 2008 Last Modified: 27th July 2012 Expires: Not Supplied Suspended: Not Supplied Revoked: Not Supplied Surrendered: Not Supplied IPPC Reference: Not Supplied Positional Accuracy: Located by supplier to within 10m	A14SW (E)	481	1	498471 102930
15	**Licensed Waste Management Facilities (Locations)** Licence Number: 19754 Location: Jones And Co, Burndell Road, Yapton, West Sussex, BN18 0HP Operator Name: Jones P H Operator Location: Not Supplied Authority: Environment Agency - South East Region, Solent & South Downs Area Site Category: Metal Recycling Sites (Mixed) **Licence Status: Issued** Issued: 31st March 1994 Last Modified: Not Supplied Expires: Not Supplied Suspended: Not Supplied Revoked: Not Supplied Surrendered: Not Supplied IPPC Reference: Not Supplied Positional Accuracy: Located by supplier to within 100m	A14SW (SE)	563	1	498500 102800
	Local Authority Landfill Coverage Name: Arun District Council - Has no landfill data to supply		0	7	497971 103090
	Local Authority Landfill Coverage Name: West Sussex County Council - Has supplied landfill data		0	4	497971 103090

ARUN DISTRICT COUNCIL Y/22/14/

Map ID	Details	Quadrant Reference (Compass Direction)	Estimated Distance From Site	Contact	NGR
16	**Local Authority Recorded Landfill Sites** Location: Old Canal, East Of Downview Road, Yapton Reference: Y/50/79 Authority: West Sussex County Council, Environment & Development **Last Reported Status:** **Unknown** Types of Waste: Not Supplied Date of Closure: Not Supplied Positional Accuracy: Located by supplier to within 100m Boundary Quality: Not Applicable	A14NW (E)	385	4	498400 103200
17	**Registered Landfill Sites** Licence Holder: A C Langmead Licence Reference: 5/AP/79 Site Location: Disused Chichester/Arundel Canal, North Of Burndell Road, Yapton, Arundel, West Sussex Licence Easting: 498400 Licence Northing: 103160 Operator Location: Wicks Farm, Yapton, Arundel, West Sussex Authority: Environment Agency - Southern Region, Sussex Area Site Category: Landfill Max Input Rate: Undefined Waste Source Restrictions: No known restriction on source of waste Status: Licence lapsed/cancelled/defunct/not applicable/surrenderedCancelled Dated: 10th December 1979 Preceded By Licence: Not Given Superseded By Licence: Not Given Positional Accuracy: Manually positioned to the address or location Boundary Accuracy: Not Applicable Authorised Waste: Construction And Demolition Wastes Excavated Natural Materials $ Prohibited Waste: Contaminated Rubble Contaminated Soil	A14NW (E)	378	1	498400 103160
18	**Registered Waste Treatment or Disposal Sites** Licence Holder: P Hill Jones Licence Reference: WSX/L1/0052/1 Site Location: Jones & Co, Burndell Road, Yapton, Arundel, West Sussex, Bn18 0hp Operator Location: 148 Barnham Road, BOGNOR REGIS, West Sussex, PO22 0EH Authority: Environment Agency - Southern Region, Sussex Area Site Category: Scrapyard Max Input Rate: Very Small (Less than 10,000 tonnes per year) Waste Source Restrictions: No known restriction on source of waste Licence Status: Site exempt from licenceExempt Dated: 31st March 1994 Preceded By Licence: Not Given Superseded By Licence: Not Given Positional Accuracy: Manually positioned to the road within the address or location Boundary Quality: Not Supplied Authorised Waste: Elec/Electronic Compts/Fitt/Fixt/Apps Empty Used Containers > 25 L Lead/Acid Batteries Max.Waste Permitted By Licence Scrap Metal Prohibited Waste: Asbestos Metallic Powders Pcb'S And Analogues Percussive/Explosive/Similar Waste Spec.Waste (Epa'90:S62/1996 Regs)N.O.S Sub'S Control. Radioactive Subs Act'60 Waste N.O.S. Waste React.Violently W/ Water Or Air	A13SE (E)	297	1	498300 103000

Map ID	Details	Quadrant Reference (Compass Direction)	Estimated Distance From Site	Contact	NGR
19	**Registered Waste Treatment or Disposal Sites** Licence Holder: Landtech International Ltd Licence Reference: 5/BZ/92 Site Location: South West Of Yapton Road, Ford Airfield, Ford, Arundel, West Sussex Operator Location: Landtech House, Farren Court, Cowfold, HORSHAM, West Sussex, RH13 8BP Authority: Environment Agency - Southern Region, Sussex Area Site Category: Composting Max Input Rate: Small (Equal to or greater than 10,000 and less than 25,000 tonnes per year) Waste Source Restrictions: No known restriction on source of waste Licence Status: Licence lapsed/cancelled/defunct/not applicable/surrenderedCancelled Dated: 1st August 1992 Preceded By Licence: Not Given Superseded By Licence: Not Given Positional Accuracy: Unknown Boundary Quality: Not Supplied Authorised Waste: Any Waste Approved By Licensing Auth. Grass Cuttings,Leaves,Branches,Plants Max.Storage Unprocessed Waste Otheswaste Norm'Y Assoc. Park/Garden Similar From Parks & Gardens	A9NW (SE)	795	1	498609 102549

Map ID	Details	Quadrant Reference (Compass Direction)	Estimated Distance From Site	Contact	NGR
	BGS 1:625,000 Solid Geology Description: Chalk including Red Chalk	A13SE (SE)	0	3	497971 103090
	BGS Estimated Soil Chemistry Source: British Geological Survey, National Geoscience Information Service Soil Sample Type: Sediment Arsenic Concentration: <15 mg/kg Cadmium Concentration: <1.8 mg/kg Chromium Concentration: 60 - 90 mg/kg Lead Concentration: <150 mg/kg Nickel Concentration: 15 - 30 mg/kg	A13SE (SE)	0	5	497971 103090
	BGS Estimated Soil Chemistry Source: British Geological Survey, National Geoscience Information Service Soil Sample Type: Sediment Arsenic Concentration: <15 mg/kg Cadmium Concentration: <1.8 mg/kg Chromium Concentration: 60 - 90 mg/kg Lead Concentration: <150 mg/kg Nickel Concentration: 15 - 30 mg/kg	A13SE (E)	0	5	498000 103090
	BGS Estimated Soil Chemistry Source: British Geological Survey, National Geoscience Information Service Soil Sample Type: Sediment Arsenic Concentration: <15 mg/kg Cadmium Concentration: <1.8 mg/kg Chromium Concentration: 60 - 90 mg/kg Lead Concentration: <150 mg/kg Nickel Concentration: 15 - 30 mg/kg	A13SE (S)	53	5	497971 103000
	BGS Estimated Soil Chemistry Source: British Geological Survey, National Geoscience Information Service Soil Sample Type: Sediment Arsenic Concentration: <15 mg/kg Cadmium Concentration: <1.8 mg/kg Chromium Concentration: 60 - 90 mg/kg Lead Concentration: <150 mg/kg Nickel Concentration: 15 - 30 mg/kg	A13SE (S)	54	5	498000 103000
	BGS Estimated Soil Chemistry Source: British Geological Survey, National Geoscience Information Service Soil Sample Type: Sediment Arsenic Concentration: <15 mg/kg Cadmium Concentration: <1.8 mg/kg Chromium Concentration: 60 - 90 mg/kg Lead Concentration: <150 mg/kg Nickel Concentration: 15 - 30 mg/kg	A13NE (N)	149	5	497971 103277
	BGS Estimated Soil Chemistry Source: British Geological Survey, National Geoscience Information Service Soil Sample Type: Sediment Arsenic Concentration: <15 mg/kg Cadmium Concentration: <1.8 mg/kg Chromium Concentration: 60 - 90 mg/kg Lead Concentration: <150 mg/kg Nickel Concentration: 15 - 30 mg/kg	A13NE (N)	149	5	498000 103277

Map ID	Details	Quadrant Reference (Compass Direction)	Estimated Distance From Site	Contact	NGR
	BGS Estimated Soil Chemistry Source: British Geological Survey, National Geoscience Information Service Soil Sample Type: Sediment Arsenic Concentration: <15 mg/kg Cadmium Concentration: <1.8 mg/kg Chromium Concentration: 60 - 90 mg/kg Lead Concentration: <150 mg/kg Nickel Concentration: 15 - 30 mg/kg	A18NE (N)	872	5	497971 104000
	BGS Estimated Soil Chemistry Source: British Geological Survey, National Geoscience Information Service Soil Sample Type: Sediment Arsenic Concentration: <15 mg/kg Cadmium Concentration: <1.8 mg/kg Chromium Concentration: 60 - 90 mg/kg Lead Concentration: <150 mg/kg Nickel Concentration: 15 - 30 mg/kg	A18NE (N)	872	5	498000 104000
	BGS Estimated Soil Chemistry Source: British Geological Survey, National Geoscience Information Service Soil Sample Type: Sediment Arsenic Concentration: <15 mg/kg Cadmium Concentration: <1.8 mg/kg Chromium Concentration: 60 - 90 mg/kg Lead Concentration: <150 mg/kg Nickel Concentration: 15 - 30 mg/kg	A12SW (W)	915	5	497000 103090
	BGS Estimated Soil Chemistry Source: British Geological Survey, National Geoscience Information Service Soil Sample Type: Sediment Arsenic Concentration: <15 mg/kg Cadmium Concentration: <1.8 mg/kg Chromium Concentration: 60 - 90 mg/kg Lead Concentration: <150 mg/kg Nickel Concentration: 15 - 30 mg/kg	A12SW (W)	917	5	497000 103000
	BGS Estimated Soil Chemistry Source: British Geological Survey, National Geoscience Information Service Soil Sample Type: Sediment Arsenic Concentration: <15 mg/kg Cadmium Concentration: <1.8 mg/kg Chromium Concentration: 60 - 90 mg/kg Lead Concentration: <150 mg/kg Nickel Concentration: 15 - 30 mg/kg	A12NW (W)	942	5	497000 103286
	BGS Estimated Soil Chemistry Source: British Geological Survey, National Geoscience Information Service Soil Sample Type: Sediment Arsenic Concentration: <15 mg/kg Cadmium Concentration: <1.8 mg/kg Chromium Concentration: 60 - 90 mg/kg Lead Concentration: <150 mg/kg Nickel Concentration: 15 - 30 mg/kg	A15SW (E)	976	5	499000 103090

Map ID	Details	Quadrant Reference (Compass Direction)	Estimated Distance From Site	Contact	NGR
	BGS Estimated Soil Chemistry Source: British Geological Survey, National Geoscience Information Service Soil Sample Type: Sediment Arsenic Concentration: <15 mg/kg Cadmium Concentration: <1.8 mg/kg Chromium Concentration: 60 - 90 mg/kg Lead Concentration: <150 mg/kg Nickel Concentration: 15 - 30 mg/kg	A15SW (E)	984	5	499000 103000
	BGS Estimated Soil Chemistry Source: British Geological Survey, National Geoscience Information Service Soil Sample Type: Sediment Arsenic Concentration: <15 mg/kg Cadmium Concentration: <1.8 mg/kg Chromium Concentration: 60 - 90 mg/kg Lead Concentration: <150 mg/kg Nickel Concentration: 15 - 30 mg/kg	A15NW (E)	987	5	499000 103268
20	**BGS Recorded Mineral Sites** Site Name: Burndell Brick Yard Location: , Yapton, Arundel, West Sussex Source: British Geological Survey, National Geoscience Information Service Reference: 157582 Type: Opencast **Status: Ceased** Operator: Unknown Operator Operator Location: Unknown Operator Periodic Type: Quaternary Geology: River Terrace Deposits (Undifferentiated) Commodity: Common Clay and Shale Positional Accuracy: Located by supplier to within 10m	A13SW (W)	48	3	497877 103090
21	**BGS Recorded Mineral Sites** Site Name: Burndell Brick Field Location: , Yapton, Arundel, West Sussex Source: British Geological Survey, National Geoscience Information Service Reference: 157583 Type: Opencast **Status: Ceased** Operator: Unknown Operator Operator Location: Unknown Operator Periodic Type: Quaternary Geology: River Terrace Deposits (Undifferentiated) Commodity: Common Clay and Shale Positional Accuracy: Located by supplier to within 10m	A13NE (E)	167	3	498190 103111
	BGS Measured Urban Soil Chemistry No data available				
	BGS Urban Soil Chemistry Averages No data available				
	Coal Mining Affected Areas In an area that might not be affected by coal mining				
	Non Coal Mining Areas of Great Britain Risk: Rare Source: British Geological Survey, National Geoscience Information Service	A13SE (SE)	0	3	497971 103090
	Potential for Collapsible Ground Stability Hazards Hazard Potential: Low Source: British Geological Survey, National Geoscience Information Service	A13SE (SE)	0	3	497971 103090
	Potential for Compressible Ground Stability Hazards Hazard Potential: No Hazard Source: British Geological Survey, National Geoscience Information Service	A13SE (SE)	0	3	497971 103090
	Potential for Ground Dissolution Stability Hazards Hazard Potential: Very Low Source: British Geological Survey, National Geoscience Information Service	A13SE (SE)	0	3	497971 103090
	Potential for Ground Dissolution Stability Hazards Hazard Potential: No Hazard Source: British Geological Survey, National Geoscience Information Service	A13SE (S)	83	3	498014 102973

Map ID	Details	Quadrant Reference (Compass Direction)	Estimated Distance From Site	Contact	NGR
	Potential for Landslide Ground Stability Hazards Hazard Potential: Very Low Source: British Geological Survey, National Geoscience Information Service	A13SE (SE)	0	3	497971 103090
	Potential for Running Sand Ground Stability Hazards Hazard Potential: Low Source: British Geological Survey, National Geoscience Information Service	A13SE (SE)	0	3	497971 103090
	Potential for Shrinking or Swelling Clay Ground Stability Hazards Hazard Potential: Low Source: British Geological Survey, National Geoscience Information Service	A13SE (SE)	0	3	497971 103090
	Radon Potential - Radon Protection Measures Protection Measure: No radon protective measures are necessary in the construction of new dwellings or extensions Source: British Geological Survey, National Geoscience Information Service	A13SE (SE)	0	3	497971 103090
	Radon Potential - Radon Affected Areas Affected Area: The property is in a lower probability radon area, as less than 1% of homes are above the action level Source: British Geological Survey, National Geoscience Information Service	A13SE (SE)	0	3	497971 103090

Map ID	Details	Quadrant Reference (Compass Direction)	Estimated Distance From Site	Contact	NGR
22	**Contemporary Trade Directory Entries** Name: Barnly Engineering Location: Kings Close, Yapton, Arundel, West Sussex, BN18 0EX Classification: Precision Engineers **Status: Inactive** Positional Accuracy: Automatically positioned to the address	A13NE (NE)	0	-	497990 103116
23	**Contemporary Trade Directory Entries** Name: Sfp Location: 9, Canal Road, Yapton, Arundel, West Sussex, BN18 0HA Classification: Engineering Services **Status: Inactive** Positional Accuracy: Automatically positioned to the address	A13SW (W)	116	-	497801 103037
24	**Contemporary Trade Directory Entries** Name: Arun Pest Control Service Location: 23, Briar Close, Church Road, Yapton, Arundel, West Sussex, BN18 0ES Classification: Pest & Vermin Control **Status: Active** Positional Accuracy: Automatically positioned to the address	A13NW (N)	159	-	497930 103285
25	**Contemporary Trade Directory Entries** Name: P & H Plumbing & Heating Location: 10, Park Road, Yapton, Arundel, West Sussex, BN18 0JE Classification: Boilers - Servicing, Replacements & Repairs **Status: Inactive** Positional Accuracy: Automatically positioned to the address	A13SE (SE)	165	-	498146 102983
26	**Contemporary Trade Directory Entries** Name: Diamond Location: 24, Canal Road, Yapton, Arundel, West Sussex, BN18 0HD Classification: Commercial Cleaning Services **Status: Inactive** Positional Accuracy: Automatically positioned to the address	A13SW (SW)	185	-	497746 102985
26	**Contemporary Trade Directory Entries** Name: Diamond Carpet & Upholstery Cleaning Services Location: 24, Canal Road, Yapton, Arundel, West Sussex, BN18 0HD Classification: Carpet, Curtain & Upholstery Cleaners **Status: Inactive** Positional Accuracy: Automatically positioned to the address	A13SW (SW)	185	-	497746 102985
27	**Contemporary Trade Directory Entries** Name: Maison Belles Location: 8, Fairholme Drive, Yapton, Arundel, West Sussex, BN18 0JH Classification: Cleaning Services - Domestic **Status: Active** Positional Accuracy: Automatically positioned to the address	A13SE (SE)	305	-	498161 102798
27	**Contemporary Trade Directory Entries** Name: K S W Vehicle Inspections Location: 21, Fairholme Drive, Yapton, Arundel, West Sussex, BN18 0JH Classification: Vehicle Inspection Services **Status: Inactive** Positional Accuracy: Automatically positioned to the address	A13SE (SE)	330	-	498199 102795
28	**Contemporary Trade Directory Entries** Name: Yapton Metal Co Location: Wayside, Burndell Road, Yapton, Arundel, West Sussex, BN18 0HP Classification: Scrap Metal Merchants **Status: Active** Positional Accuracy: Automatically positioned to the address	A14SW (E)	327	-	498331 102996
28	**Contemporary Trade Directory Entries** Name: Burndell Location: Wayside, Burndell Road, Yapton, Arundel, West Sussex, BN18 0HP Classification: Salvage Dealers **Status: Inactive** Positional Accuracy: Automatically positioned to the address	A14SW (E)	327	-	498331 102996
29	**Contemporary Trade Directory Entries** Name: Mowercare Location: Unit 14,Bilsham Ind Est, Yapton, Arundel, West Sussex, BN18 0JN Classification: Lawnmowers & Garden Machinery - Sales & Service **Status: Inactive** Positional Accuracy: Manually positioned within the geographical locality	A8NE (S)	342	-	497970 102712
30	**Contemporary Trade Directory Entries** Name: G S Auto Recovery Location: Main Road, Yapton, Arundel, West Sussex, BN18 0EA Classification: Mechanical Engineers **Status: Inactive** Positional Accuracy: Automatically positioned in the proximity of the address	A12NE (NW)	408	-	497581 103297

Map ID	Details	Quadrant Reference (Compass Direction)	Estimated Distance From Site	Contact	NGR
30	**Contemporary Trade Directory Entries** Name: Reptune Motors Location: Main Road, Yapton, Arundel, West Sussex, BN18 0EA Classification: Garage Services **Status: Inactive** Positional Accuracy: Automatically positioned in the proximity of the address	A12NE (NW)	408	-	497581 103297
31	**Contemporary Trade Directory Entries** Name: T J Waste & Recycling Location: Northwood farm,Burndell Rd, Yapton, Arundel, West Sussex, BN18 0HR Classification: Tyre Disposal **Status: Inactive** Positional Accuracy: Manually positioned to the road within the address or location	A14SW (E)	550	-	498542 102924
31	**Contemporary Trade Directory Entries** Name: Ryan Cars Ltd Location: Burndell Rd, Yapton, Arundel, West Sussex, BN18 0HP Classification: Car Dealers **Status: Inactive** Positional Accuracy: Manually positioned to the road within the address or location	A14SW (E)	554	-	498546 102924
31	**Contemporary Trade Directory Entries** Name: Bravura Services Location: Burndell Rd, Yapton, Arundel, West Sussex, BN18 0HR Classification: Clay & Clay Products **Status: Active** Positional Accuracy: Manually positioned within the geographical locality	A14SW (E)	584	-	498564 102887
32	**Contemporary Trade Directory Entries** Name: Equipet Location: North End Rd, Yapton, Arundel, West Sussex, BN18 0DU Classification: Pet Foods & Animal Feeds **Status: Inactive** Positional Accuracy: Manually positioned to the road within the address or location	A18SW (N)	553	-	497817 103664
33	**Contemporary Trade Directory Entries** Name: Express Aftercare Services Location: Unit 5, Orchard Business Park, North End Road, Yapton, Arundel, West Sussex, BN18 0GA Classification: Electrical Goods Sales, Manufacturers & Wholesalers **Status: Active** Positional Accuracy: Automatically positioned to the address	A18SE (N)	575	-	497980 103703
33	**Contemporary Trade Directory Entries** Name: Barnham Car Centre Location: Unit 25, Orchard Business Park, North End Road, Yapton, Arundel, West Sussex, BN18 0GA Classification: Car Dealers - Used **Status: Active** Positional Accuracy: Automatically positioned to the address	A18SW (N)	609	-	497932 103737
33	**Contemporary Trade Directory Entries** Name: Classic Perfections Location: Unit 25, Orchard Business Park, North End Road, Yapton, Arundel, West Sussex, BN18 0GA Classification: Classic Car Specialists **Status: Active** Positional Accuracy: Automatically positioned to the address	A18SW (N)	609	-	497932 103737
33	**Contemporary Trade Directory Entries** Name: V & C Auto Sales Location: Unit 11,Orchard Business Park,North End Rd, Yapton, Arundel, West Sussex, BN18 0DS Classification: Car Dealers - Used **Status: Inactive** Positional Accuracy: Manually positioned within the geographical locality	A18SW (N)	611	-	497961 103739
33	**Contemporary Trade Directory Entries** Name: Ems Animal Feeds Location: Unit 11, Orchard Business Park, North End Road, Yapton, Arundel, West Sussex, BN18 0GA Classification: Pet Foods & Animal Feeds **Status: Active** Positional Accuracy: Automatically positioned to the address	A18NW (N)	649	-	497961 103778
33	**Contemporary Trade Directory Entries** Name: C & W Seals Location: Unit 15-16, Orchard Business Park, North End Road, Yapton, Arundel, West Sussex, BN18 0GA Classification: Seal & Joint Manufacturers **Status: Active** Positional Accuracy: Automatically positioned to the address	A18NW (N)	649	-	497961 103778

Map ID	Details	Quadrant Reference (Compass Direction)	Estimated Distance From Site	Contact	NGR
33	**Contemporary Trade Directory Entries** Name: Arun Ltd Location: Unit 18, Orchard Business Park, North End Road, Yapton, Arundel, West Sussex, BN18 0GA Classification: Waste Disposal Services **Status: Inactive** Positional Accuracy: Automatically positioned to the address	A18NW (N)	649	-	497961 103778
33	**Contemporary Trade Directory Entries** Name: B P S Garden Machinary Ltd Location: Unit 15-16, Orchard Business Park, North End Road, Yapton, Arundel, West Sussex, BN18 0GA Classification: Lawnmowers & Garden Machinery - Sales & Service **Status: Active** Positional Accuracy: Automatically positioned to the address	A18NW (N)	649	-	497961 103778
33	**Contemporary Trade Directory Entries** Name: V Dubz R Us Location: Unit 10, Orchard Business Park, North End Road, Yapton, Arundel, West Sussex, BN18 0GA Classification: Car Body Repairs **Status: Active** Positional Accuracy: Automatically positioned to the address	A18NW (N)	649	-	497961 103778
34	**Contemporary Trade Directory Entries** Name: Smiths Electrical Location: 54, Fordwater Gardens, Yapton, Arundel, West Sussex, BN18 0HU Classification: Washing Machines - Servicing & Repairs **Status: Active** Positional Accuracy: Automatically positioned to the address	A14SW (E)	628	-	498628 102943
35	**Contemporary Trade Directory Entries** Name: Klean It Division Ltd Location: 32, Taylors Close, Yapton, Arundel, West Sussex, BN18 0FN Classification: Commercial Cleaning Services **Status: Active** Positional Accuracy: Automatically positioned to the address	A8SW (S)	670	-	497868 102389
35	**Contemporary Trade Directory Entries** Name: Klean It Location: 32, Taylors Close, Yapton, Arundel, West Sussex, BN18 0FN Classification: Cleaning Services - Domestic **Status: Active** Positional Accuracy: Automatically positioned to the address	A8SW (S)	670	-	497868 102389
36	**Contemporary Trade Directory Entries** Name: R & D Ayling Location: Unit 13, Bilsham Road, Yapton, Arundel, West Sussex, BN18 0JN Classification: Wrought Ironwork **Status: Inactive** Positional Accuracy: Automatically positioned to the address	A8SW (S)	679	-	497780 102395
36	**Contemporary Trade Directory Entries** Name: Felpham Mowers Location: Unit 9, Bilsham Road, Yapton, ARUNDEL, West Sussex, BN18 0JN Classification: Lawnmowers & Garden Machinery - Sales & Service **Status: Inactive** Positional Accuracy: Automatically positioned to the address	A8SW (S)	699	-	497792 102372
36	**Contemporary Trade Directory Entries** Name: Hydro Art Location: Unit 9, Bilsham Road, Yapton, Arundel, West Sussex, BN18 0JN Classification: Manufacturers **Status: Inactive** Positional Accuracy: Automatically positioned to the address	A8SW (S)	699	-	497792 102372
37	**Contemporary Trade Directory Entries** Name: Arun Meat & Livestock Co Ltd Location: The Steddlers, North End Road, Yapton, Arundel, West Sussex, BN18 0DT Classification: Meat - Wholesale **Status: Inactive** Positional Accuracy: Automatically positioned to the address	A18NW (N)	725	-	497829 103843
38	**Contemporary Trade Directory Entries** Name: Southdown Tractors Location: Burndell Road, Yapton, ARUNDEL, West Sussex, BN18 0HR Classification: Agricultural Machinery - Sales & Service **Status: Inactive** Positional Accuracy: Automatically positioned to the address	A9NW (SE)	756	-	498583 102578

Map ID	Details	Quadrant Reference (Compass Direction)	Estimated Distance From Site	Contact	NGR
39	**Contemporary Trade Directory Entries** Name: Ford Electro-Plating Ltd Location: Block B4, Ford Airfield Industrial Estate, Ford, Arundel, West Sussex, BN18 0HY Classification: Metal Finishing Services **Status: Active** Positional Accuracy: Automatically positioned to the address	A14NE (E)	853	-	498874 103183
39	**Contemporary Trade Directory Entries** Name: Besmoke Location: Unit B3, Ford Airfield Industrial Estate, Ford, Arundel, West Sussex, BN18 0HY Classification: Food Products - Manufacturers **Status: Active** Positional Accuracy: Automatically positioned to the address	A14NE (E)	867	-	498889 103159
39	**Contemporary Trade Directory Entries** Name: Classic Mantels Location: Block B2, Ford Airfield Industrial Estate, Ford, Arundel, West Sussex, BN18 0HY Classification: Fireplaces & Mantelpieces **Status: Active** Positional Accuracy: Automatically positioned to the address	A14NE (E)	879	-	498902 103167
39	**Contemporary Trade Directory Entries** Name: Southern Drilling Services Ltd Location: C2,Ford Airfield Ind Est, Ford, Arundel, West Sussex, BN18 0HY Classification: Drilling & Boring Equipment & Supplies **Status: Inactive** Positional Accuracy: Manually positioned to the address or location	A14NE (E)	890	-	498914 103124
39	**Contemporary Trade Directory Entries** Name: Greenhill Finishers Location: Block A4, Ford Airfield Industrial Estate, Ford, Arundel, West Sussex, BN18 0HY Classification: Powder Coatings **Status: Inactive** Positional Accuracy: Automatically positioned to the address	A14NE (E)	892	-	498915 103125
39	**Contemporary Trade Directory Entries** Name: Arun Circuits Ltd Location: Block A4, Ford Airfield Industrial Estate, Ford, Arundel, West Sussex, BN18 0HY Classification: Printed Circuit Manufacturers **Status: Inactive** Positional Accuracy: Automatically positioned to the address	A14NE (E)	892	-	498915 103125
39	**Contemporary Trade Directory Entries** Name: Tarmac Topblock Ltd Location: Block A4, Ford Airfield Industrial Estate, Ford, Arundel, West Sussex, BN18 0HY Classification: Concrete Products **Status: Inactive** Positional Accuracy: Automatically positioned to the address	A14NE (E)	892	-	498915 103125
40	**Contemporary Trade Directory Entries** Name: Southdown Circuits Ltd Location: Unit E1-E2, Ford Airfield Industrial Estate, Ford, Arundel, West Sussex, BN18 0HY Classification: Printed Circuit Manufacturers **Status: Active** Positional Accuracy: Automatically positioned to the address	A14SE (E)	887	-	498907 103038
40	**Contemporary Trade Directory Entries** Name: J J B Wire Location: Block D1, Ford Airfield Industrial Estate, Ford, Arundel, West Sussex, BN18 0HY Classification: Coating Specialists **Status: Inactive** Positional Accuracy: Automatically positioned to the address	A14SE (E)	906	-	498927 103056
40	**Contemporary Trade Directory Entries** Name: A J P Autos Ltd Location: Unit D3, Ford Airfield Industrial Estate, Ford, Arundel, West Sussex, BN18 0HY Classification: Garage Services **Status: Inactive** Positional Accuracy: Automatically positioned to the address	A14SE (E)	917	-	498937 103042

Map ID	Details	Quadrant Reference (Compass Direction)	Estimated Distance From Site	Contact	NGR
40	**Contemporary Trade Directory Entries** Name: Sussex Jag Centre Location: D4, Ford Airfield Industrial Estate, Ford, Arundel, West Sussex, BN18 0HY Classification: Car Dealers - Used **Status: Inactive** Positional Accuracy: Automatically positioned to the address	A14SE (E)	921	-	498940 103036
40	**Contemporary Trade Directory Entries** Name: Sussex Jag Centre Location: Unit 4d Ford Airfield Indust Est, Ford, Arundel, West Sussex, BN18 0HY Classification: Garage Services **Status: Inactive** Positional Accuracy: Manually positioned to the address or location	A14SE (E)	921	-	498940 103034
41	**Contemporary Trade Directory Entries** Name: Airfield Crash Repairs Ltd Location: Ford Airfield Ind Est, Ford, Arundel, West Sussex, BN18 0HY Classification: Car Body Repairs **Status: Inactive** Positional Accuracy: Manually positioned within the geographical locality	A14SE (E)	892	-	498915 103090
41	**Contemporary Trade Directory Entries** Name: Antplace Plastics Location: C9, Ford Airfield Industrial Estate, Ford, Arundel, West Sussex, BN18 0HY Classification: Plastics - Vacuum Forming **Status: Inactive** Positional Accuracy: Automatically positioned to the address	A14NE (E)	919	-	498943 103107
41	**Contemporary Trade Directory Entries** Name: Byjingham Location: Ford Airfield Ind Est, Ford, Arundel, West Sussex, BN18 0HY Classification: Road Haulage Services **Status: Inactive** Positional Accuracy: Manually positioned within the geographical locality	A14SE (E)	938	-	498960 103072
41	**Contemporary Trade Directory Entries** Name: Palletways Location: Ford Airfield Ind Est, Ford, Arundel, West Sussex, BN18 0HY Classification: Distribution Services **Status: Inactive** Positional Accuracy: Manually positioned within the geographical locality	A14SE (E)	940	-	498963 103080
42	**Contemporary Trade Directory Entries** Name: C L S Laundry Ltd Location: Unit C1, Ford Airfield Industrial Estate, Ford, Arundel, West Sussex, BN18 0HY Classification: Laundries & Launderettes **Status: Active** Positional Accuracy: Manually positioned to the address or location	A14NE (E)	903	-	498927 103133
42	**Contemporary Trade Directory Entries** Name: B D Mantels Ltd Location: Unit B2 Ford Airfield Indust Est, Ford, Arundel, West Sussex, BN18 0HY Classification: Fireplaces & Mantelpieces **Status: Inactive** Positional Accuracy: Manually positioned to the address or location	A14NE (E)	919	-	498943 103128
42	**Contemporary Trade Directory Entries** Name: Adur Ventilation Location: C6, Ford Airfield Industrial Estate, Ford, Arundel, West Sussex, BN18 0HY Classification: Ventilators & Ventilation Systems **Status: Inactive** Positional Accuracy: Automatically positioned to the address	A14NE (E)	920	-	498944 103129
42	**Contemporary Trade Directory Entries** Name: Arundel Brewery Ltd Location: Unit C7, Ford Airfield Industrial Estate, Ford, Arundel, West Sussex, BN18 0HY Classification: Brewers **Status: Active** Positional Accuracy: Automatically positioned to the address	A14NE (E)	938	-	498961 103130
42	**Contemporary Trade Directory Entries** Name: Euro Louvre Systems Location: Ford Airfield Ind Est, Ford, Arundel, West Sussex, BN18 0HY Classification: Ventilators & Ventilation Systems **Status: Inactive** Positional Accuracy: Manually positioned within the geographical locality	A14NE (E)	940	-	498963 103164

Map ID	Details	Quadrant Reference (Compass Direction)	Estimated Distance From Site	Contact	NGR
42	**Contemporary Trade Directory Entries** Name: Besmoke Ltd Location: Unit B1, Ford Airfield Industrial Estate, Ford, Arundel, West Sussex, BN18 0HY Classification: Manufacturers **Status: Inactive** Positional Accuracy: Manually positioned within the geographical locality	A14NE (E)	944	-	498968 103119
43	**Contemporary Trade Directory Entries** Name: John Hyams Location: 18, Johnson Way, Ford, Arundel, West Sussex, BN18 0TD Classification: Road Haulage Services **Status: Inactive** Positional Accuracy: Automatically positioned to the address	A14SE (E)	918	-	498904 102850
44	**Contemporary Trade Directory Entries** Name: John Booth Engineering Ltd Location: Block A1, Ford Airfield Industrial Estate, Ford, Arundel, West Sussex, BN18 0HY Classification: Sheet Metal Work **Status: Active** Positional Accuracy: Automatically positioned to the address	A14NE (E)	937	-	498955 103218
45	**Contemporary Trade Directory Entries** Name: K T Services Ltd Location: Ford Airfield Industrial Estate, Ford, Arundel, West Sussex, BN18 0HY Classification: Commercial Vehicle Servicing, Repairs, Parts & Accessories **Status: Active** Positional Accuracy: Automatically positioned to the address	A15SW (E)	972	-	498995 103087
46	**Contemporary Trade Directory Entries** Name: Bleach Of Lavant Ltd Location: Ford Lane, Ford, Arundel, West Sussex, BN18 0DF Classification: Road Haulage Services **Status: Active** Positional Accuracy: Automatically positioned to the address	A19SE (NE)	977	-	498885 103583
47	**Fuel Station Entries** Name: Noble Autos Location: Burndell Road, Yapton, ARUNDEL, West Sussex, BN18 0HP Brand: Proteus Premises Type: Not Applicable **Status: Obsolete** Positional Accuracy: Manually positioned to the road within the address or location	A13SE (E)	289	-	498299 103022
48	**Fuel Station Entries** Name: Central Garage Location: Main Road, Yapton, ARUNDEL, West Sussex, BN18 0EA Brand: Obsolete Premises Type: Not Applicable **Status: Obsolete** Positional Accuracy: Automatically positioned to the address	A12NE (NW)	408	-	497581 103297

Map ID	Details	Quadrant Reference (Compass Direction)	Estimated Distance From Site	Contact	NGR
49	**Nitrate Vulnerable Zones** Name: Not Supplied Description: NVZ Area Source: Department for Environment, Food and Rural Affairs (DEFRA - formerly FRCA)	A13SE (SE)	0	6	497971 103090

Agency & Hydrological	Version	Update Cycle
Contaminated Land Register Entries and Notices		
Arun District Council - Environmental Health Department	July 2013	Annual Rolling Update
Chichester District Council - Environmental Health Department	July 2013	Annual Rolling Update
Discharge Consents		
Environment Agency - Southern Region	October 2013	Quarterly
Enforcement and Prohibition Notices		
Environment Agency - Southern Region	March 2013	As notified
Integrated Pollution Controls		
Environment Agency - Southern Region	October 2008	Not Applicable
Integrated Pollution Prevention And Control		
Environment Agency - Southern Region	October 2013	Quarterly
Local Authority Integrated Pollution Prevention And Control		
Chichester District Council - Environmental Health Department	February 2013	Annual Rolling Update
Arun District Council - Environmental Health Department	May 2013	Annual Rolling Update
Local Authority Pollution Prevention and Controls		
Chichester District Council - Environmental Health Department	February 2013	Annual Rolling Update
Arun District Council - Environmental Health Department	May 2013	Annual Rolling Update
Local Authority Pollution Prevention and Control Enforcements		
Chichester District Council - Environmental Health Department	February 2013	Annual Rolling Update
Arun District Council - Environmental Health Department	May 2013	Annual Rolling Update
Nearest Surface Water Feature		
Ordnance Survey	July 2012	Quarterly
Pollution Incidents to Controlled Waters		
Environment Agency - Southern Region	December 1999	Not Applicable
Prosecutions Relating to Authorised Processes		
Environment Agency - Southern Region	March 2013	As notified
Prosecutions Relating to Controlled Waters		
Environment Agency - Southern Region	March 2013	As notified
Registered Radioactive Substances		
Environment Agency - Southern Region	October 2013	Quarterly
River Quality		
Environment Agency - Head Office	November 2001	Not Applicable
River Quality Biology Sampling Points		
Environment Agency - Head Office	July 2012	Annually
River Quality Chemistry Sampling Points		
Environment Agency - Head Office	July 2012	Annually
Substantiated Pollution Incident Register		
Environment Agency - Southern Region - Solent and South Downs	October 2013	Quarterly
Environment Agency - Southern Region - Sussex Area	October 2013	Quarterly
Water Abstractions		
Environment Agency - Southern Region	October 2013	Quarterly
Water Industry Act Referrals		
Environment Agency - Southern Region	October 2013	Quarterly
Groundwater Vulnerability		
Environment Agency - Head Office	January 2011	Not Applicable
Drift Deposits		
Environment Agency - Head Office	January 1999	Not Applicable
Bedrock Aquifer Designations		
British Geological Survey - National Geoscience Information Service	October 2012	Annually
Superficial Aquifer Designations		
British Geological Survey - National Geoscience Information Service	October 2012	Annually

Agency & Hydrological	Version	Update Cycle
Source Protection Zones		
Environment Agency - Head Office	October 2013	Quarterly
Extreme Flooding from Rivers or Sea without Defences		
Environment Agency - Head Office	August 2013	Quarterly
Flooding from Rivers or Sea without Defences		
Environment Agency - Head Office	August 2013	Quarterly
Areas Benefiting from Flood Defences		
Environment Agency - Head Office	August 2013	Quarterly
Flood Water Storage Areas		
Environment Agency - Head Office	August 2013	Quarterly
Flood Defences		
Environment Agency - Head Office	August 2013	Quarterly
Waste	**Version**	**Update Cycle**
BGS Recorded Landfill Sites		
British Geological Survey - National Geoscience Information Service	June 1996	Not Applicable
Historical Landfill Sites		
Environment Agency - Southern Region - Solent and South Downs	October 2013	Quarterly
Environment Agency - Southern Region - Sussex Area	October 2013	Quarterly
Integrated Pollution Control Registered Waste Sites		
Environment Agency - Southern Region	October 2008	Not Applicable
Licensed Waste Management Facilities (Landfill Boundaries)		
Environment Agency - Southern Region - Solent and South Downs	October 2013	Quarterly
Environment Agency - Southern Region - Sussex Area	October 2013	Quarterly
Licensed Waste Management Facilities (Locations)		
Environment Agency - South East Region - Solent & South Downs Area	July 2013	Quarterly
Environment Agency - Southern Region - Solent and South Downs	July 2013	Quarterly
Environment Agency - Southern Region - Sussex Area	July 2013	Quarterly
Local Authority Landfill Coverage		
Arun District Council - Technical Support Unit	May 2000	Not Applicable
Chichester District Council - Environmental Health Department	May 2000	Not Applicable
West Sussex County Council - Environment & Development	May 2000	Not Applicable
Local Authority Recorded Landfill Sites		
Arun District Council - Technical Support Unit	May 2000	Not Applicable
Chichester District Council - Environmental Health Department	May 2000	Not Applicable
West Sussex County Council - Environment & Development	May 2000	Not Applicable
Registered Landfill Sites		
Environment Agency - Southern Region - Sussex Area	March 2003	Not Applicable
Registered Waste Transfer Sites		
Environment Agency - Southern Region - Sussex Area	March 2003	Not Applicable
Registered Waste Treatment or Disposal Sites		
Environment Agency - Southern Region - Sussex Area	March 2003	Not Applicable

Hazardous Substances	Version	Update Cycle
Control of Major Accident Hazards Sites (COMAH) Health and Safety Executive	August 2013	Bi-Annually
Explosive Sites Health and Safety Executive	March 2013	Bi-Annually
Notification of Installations Handling Hazardous Substances (NIHHS) Health and Safety Executive	November 2000	Not Applicable
Planning Hazardous Substance Enforcements Arun District Council - Technical Support Unit Chichester District Council - Planning Department West Sussex County Council - Environment & Development	 August 2013 December 2012 October 2006	 Annual Rolling Update Annual Rolling Update Annual Rolling Update
Planning Hazardous Substance Consents Arun District Council - Technical Support Unit Chichester District Council - Planning Department West Sussex County Council - Environment & Development	 August 2013 December 2012 October 2006	 Annual Rolling Update Annual Rolling Update Annual Rolling Update
Geological	**Version**	**Update Cycle**
BGS 1:625,000 Solid Geology British Geological Survey - National Geoscience Information Service	August 1996	Not Applicable
BGS Estimated Soil Chemistry British Geological Survey - National Geoscience Information Service	January 2010	Variable
BGS Recorded Mineral Sites British Geological Survey - National Geoscience Information Service	October 2013	Bi-Annually
Brine Compensation Area Cheshire Brine Subsidence Compensation Board	August 2011	Not Applicable
Coal Mining Affected Areas The Coal Authority - Mining Report Service	January 2012	As notified
Mining Instability Ove Arup & Partners	October 2000	Not Applicable
Non Coal Mining Areas of Great Britain British Geological Survey - National Geoscience Information Service	February 2011	Not Applicable
Potential for Collapsible Ground Stability Hazards British Geological Survey - National Geoscience Information Service	October 2013	As notified
Potential for Compressible Ground Stability Hazards British Geological Survey - National Geoscience Information Service	October 2013	As notified
Potential for Ground Dissolution Stability Hazards British Geological Survey - National Geoscience Information Service	October 2013	As notified
Potential for Landslide Ground Stability Hazards British Geological Survey - National Geoscience Information Service	October 2013	As notified
Potential for Running Sand Ground Stability Hazards British Geological Survey - National Geoscience Information Service	October 2013	As notified
Potential for Shrinking or Swelling Clay Ground Stability Hazards British Geological Survey - National Geoscience Information Service	October 2013	As notified
Radon Potential - Radon Affected Areas British Geological Survey - National Geoscience Information Service	July 2011	As notified
Radon Potential - Radon Protection Measures British Geological Survey - National Geoscience Information Service	July 2011	As notified

Industrial Land Use	Version	Update Cycle
Contemporary Trade Directory Entries Thomson Directories	August 2013	Quarterly
Fuel Station Entries Catalist Ltd - Experian	August 2013	Quarterly
Sensitive Land Use	**Version**	**Update Cycle**
Areas of Outstanding Natural Beauty Natural England	July 2013	Bi-Annually
Environmentally Sensitive Areas Natural England	July 2013	Annually
Forest Parks Forestry Commission	April 1997	Not Applicable
Local Nature Reserves Natural England	July 2013	Bi-Annually
Marine Nature Reserves Natural England	July 2013	Bi-Annually
National Nature Reserves Natural England	July 2013	Bi-Annually
National Parks Natural England	July 2013	Bi-Annually
Nitrate Sensitive Areas Department for Environment, Food and Rural Affairs (DEFRA - formerly FRCA)	February 2012	Not Applicable
Nitrate Vulnerable Zones Department for Environment, Food and Rural Affairs (DEFRA - formerly FRCA)	February 2013	Annually
Ramsar Sites Natural England	July 2013	Bi-Annually
Sites of Special Scientific Interest Natural England	July 2013	Bi-Annually
Special Areas of Conservation Natural England	July 2013	Bi-Annually
Special Protection Areas Natural England	July 2013	Bi-Annually

Data Suppliers

A selection of organisations who provide data within this report

Data Supplier	Data Supplier Logo
Ordnance Survey	
Environment Agency	
Scottish Environment Protection Agency	
The Coal Authority	
British Geological Survey	
Centre for Ecology and Hydrology	
Countryside Council for Wales	
Scottish Natural Heritage	
Natural England	
Public Health England	
Ove Arup	
Peter Brett Associates	

Useful Contacts

Contact	Name and Address	Contact Details
1	**Environment Agency - National Customer Contact Centre (NCCC)** PO Box 544, Templeborough, Rotherham, S60 1BY	[redacted]
2	**Arun District Council - Environmental Health Department** Civic Centre, Maltravers Road, Littlehampton, Sussex, BN17 5LF	
3	**British Geological Survey - Enquiry Service** British Geological Survey, Kingsley Dunham Centre, Keyworth, Nottingham, Nottinghamshire, NG12 5GG	
4	**West Sussex County Council - Environment & Development** County Hall, Tower hall, Chichester, West Sussex, PO19 1RH	
5	**Landmark Information Group Limited** Imperium, Imperial Way, Reading, Berkshire, RG2 0TD	
6	**Department for Environment, Food and Rural Affairs (DEFRA - formerly FRCA)** Government Buildings, Otley Road, Lawnswood, Leeds, West Yorkshire, LS16 5QT	
7	**Arun District Council - Technical Support Unit** Civic Centre, Maltravers Road, Littlehampton, Sussex, BN17 5LF	
-	**Public Health England - Radon Survey, Centre for Radiation, Chemical and Environmental Hazards** Chilton, Didcot, Oxfordshire, OX11 0RQ	
-	**Landmark Information Group Limited** Imperium, Imperial Way, Reading, Berkshire, RG2 0TD	

Please note that the Environment Agency / SEPA have a charging policy in place for enquiries.