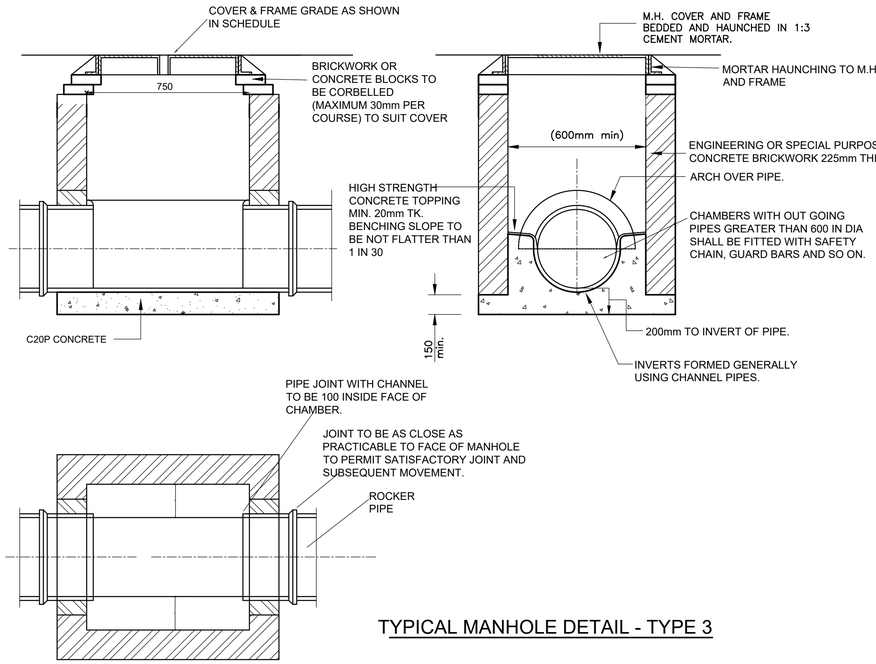

TYPICAL MANHOLE DETAIL - TYPE 3

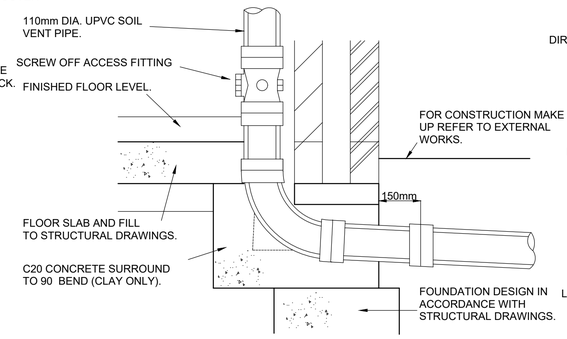

SOIL VENT PIPE CONNECTION

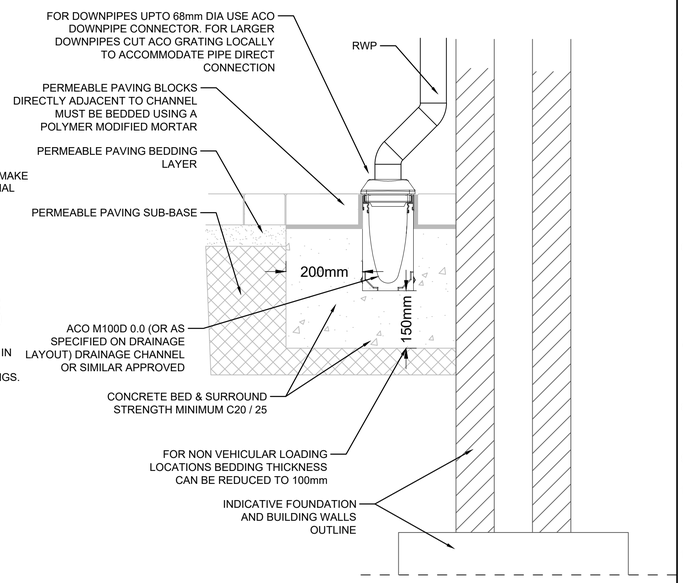

DRAINAGE CHANNEL DETAIL
(PARKING SPACES)

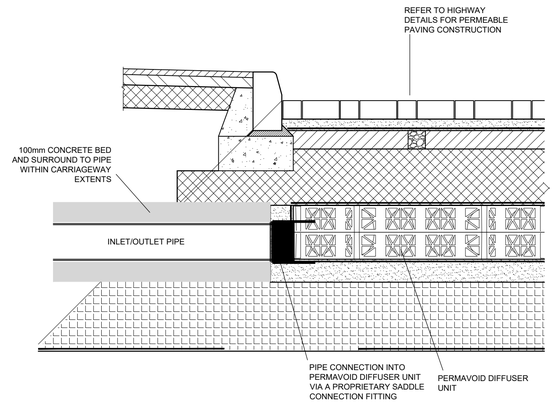

PERMAVOID DIFFUSER UNIT
FOR USE WITH 70 UNITS SCHEME TO INTERCONNECT AREAS OF PERMEABLE PAVING

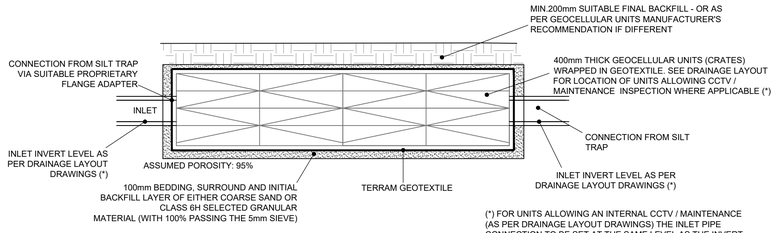

INFILTRATION BLANKET
(GEOCELLULAR UNITS - CRATES - CONSTRUCTION)

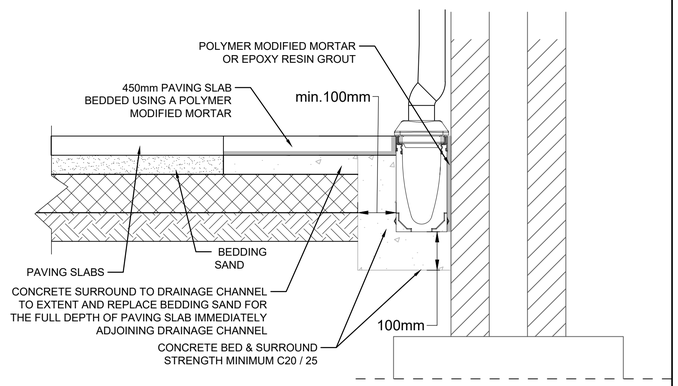

DRAINAGE CHANNEL DETAIL
(PATIO AREA)

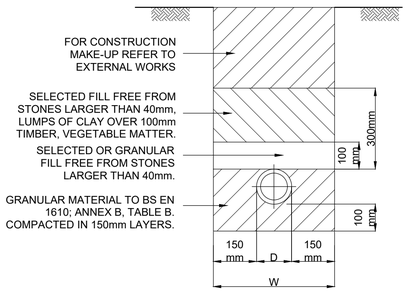

TYPICAL PIPE BEDDING DETAIL:
TYPE 3 (UPVC PIPES)

LOCATION: PEDESTRIAN AREAS: 0.6 m - 8.0 m DEEP.
VEHICLE AREAS: 1.2 m - 8.0 m DEEP.

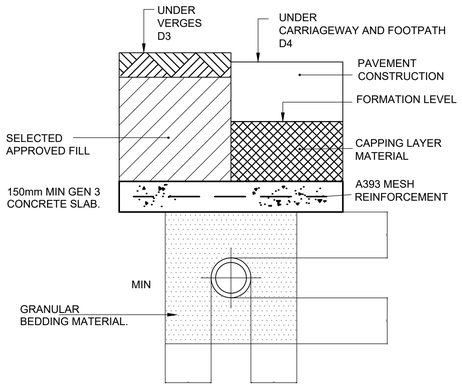

CONCRETE PAD PROTECTION

DESIGN D3 (UNDER VERGES - <900 COVER)
DESIGN D4 (UNDER CARRIAGEWAYS - <1200 COVER)

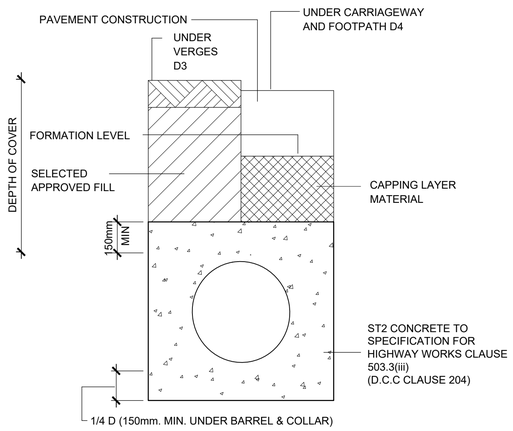

DESIGN D3 (UNDER VERGES - <900 COVER) DESIGN D4
(UNDER CARRIAGEWAYS - <1200 COVER)
BEDDING DETAIL - CLASS 'Z'

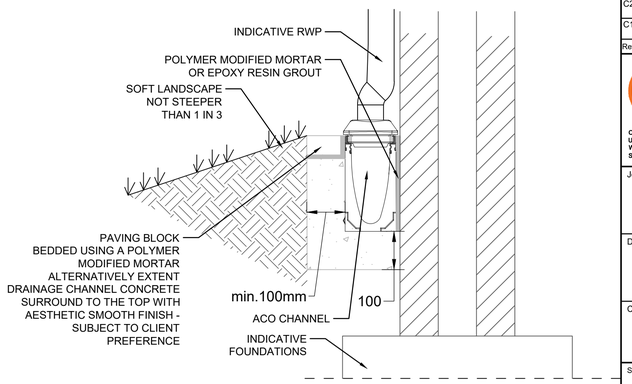

DRAINAGE CHANNEL DETAIL
(SOFT LANDSCAPE AREA)

NOTES

1. THIS DRAWING IS TO BE READ IN CONJUNCTION WITH ALL OTHER RELATED DRAWINGS ISSUED BY THE ARCHITECT AND ENGINEER AND SEWERAGE SECTOR GUIDANCE WITH APPENDICES WHERE APPLICABLE.
2. DO NOT SCALE FROM THIS DRAWING. WORK FROM FIGURED DIMENSIONS ONLY.
3. ALL DIMENSIONS SHOWN IN METRES UNLESS NOTED OTHERWISE.
4. NO DEVIATION FROM THE DETAILS SHOWN ON THIS DRAWING IS PERMITTED WITHOUT PERMISSION FROM THE ENGINEER.
5. PRIVATE FOUL WATER AND SURFACE WATER DRAINAGE IS TO BE CONSTRUCTED IN ACCORDANCE WITH THE CURRENT BUILDING REGULATIONS, BS EN 752, NHBC STANDARDS CHAPTER 5.3 AND RELEVANT AGREEMENT CERTIFICATES.
6. PRIVATE DRAINS TO BE CONSTRUCTED USING FLEXIBLY JOINTED VITRIFIED CLAY PIPES TO BS 65 "SUPER STRENGTH" SPECIFICATION (HEPWORTH SUPERSLEVE OR SIMILAR APPROVED) OR UPVC BUILDING DRAINAGE SYSTEM PIPEWORK TO BS EN 1401, BEDDED AND BACKFILLED IN ACCORDANCE WITH THE MANUFACTURER'S INSTRUCTIONS.
7. INSPECTION CHAMBER SIZES ARE TO BE IN ACCORDANCE WITH THE BUILDING REGULATIONS PART H; TABLE 11 AND MANHOLE SIZES TABLE 12.OR NHBC STANDARD WHERE APPLICABLE.
8. THE CENTRELINE OF THE MANHOLE IS NOT NECESSARILY COINCIDENTAL WITH THE CENTRELINE OF THE MAIN PIPE.
9. POSITION OF MANHOLE COVER SLAB AND STEP RUNGS TO BE DIRECTED ON SITE.
10. BACKFILLING OF DRAIN TRENCHES ADJACENT TO DWELLINGS OF OTHER STRUCTURES TO BE IN ACCORDANCE WITH THE BUILDING REGULATIONS PART H; DIAGRAM 8.
11. ALL MORTAR TO BE CLASS 1 UNLESS NOTED OTHERWISE.
12. BRICKS TO BE ENGINEERING CLASS B TO BS EN 771-1, LAID IN ENGLISH BOND ON CLASS (i) MORTAR TO CLAUSE 2404, SPECIFICATION FOR HIGHWAY WORKS. ANY OVER EXCAVATION TO BE MADE GOOD.
13. ALL CONCRETE AND CONCRETE PRODUCTS TO BE SULPHATE RESISTING.
14. INSPECTION CHAMBER COVERS IN PRIVATE AREAS SHOULD BE GROUP 1 CLASS A15, IN PEDESTRIAN AREAS INACCESSIBLE TO WHEELED VEHICLES AND GROUP 4 CLASS D400 IN VEHICULAR AREAS.
15. IN COMPLIANCE WITH CDM 2015 ODYSSEY HAS FOLLOWED IT'S DESIGN RISK MANAGEMENT PROCESS FOR HAZARD ELIMINATION AND RISK REDUCTION IN DEVELOPING THE ODYSSEY DESIGNS SHOWN ON THIS DRAWING. THERE ARE NO ABNORMAL OR UNUSUAL RESIDUAL RISKS ASSOCIATED WITH THE DESIGN. ANY OTHER RESIDUAL RISKS ARE THOSE THAT WOULD NORMALLY BE EXPECTED BY COMPETENT PERSONS OR CONTRACTORS ENGAGED ON WORK OF THIS NATURE OR TYPE.

CONSTRUCTION ISSUE

Rev	Amendments	Drn	Chk	App	Date
C5	PERMAVOID DIFFUSER DETAIL ADDED.	TSB	AK	SW	10.06.21
C4	PERMAVOID CONNECTION DETAIL OMITTED. REFER TO YAP-130-SK004	AK	SW	SW	14.04.21
C3	FURTHER DRAINAGE CHANNEL DETAILS ADDED AS PER CLIENT'S REQUIREMENT	AK	SW	SW	16.03.21
C2	AMENDMENTS AS PER ARUN DC REQUIREMENTS	AK	SW	SW	04.03.21
C1	DRAWING STATUS REVISED TO CONSTRUCTION ISSUE	AK	SW	SW	25.02.21

ODYSSEY
Odyssey House
Unit 3 Winchester Hill Business Park
Winchester Hill, Romsey
Southampton SO51 7UT
Telephone: 01794 537980
Fax: 01256 331134
E: info@odysseyconsult.co.uk
W: www.odysseyconsult.co.uk

Job Title
LAND AT STAKERS FARM, YAPTON

Drawing Title
DRAINAGE CONSTRUCTION DETAILS (SHEET 2 OF 2)

Client
DANDARA LIMITED (SOUTHERN)

Scale	Date	Designed
AS SHOWN	JUL 20	CJL
Drawn	Checked	Approved
CJL	SW	JHM
Job No	Drawing No	Rev
18-204	YAP-180-031	C5

N:\19-156 - Land at Stakers Farm, Yapton\Tech\Acad\Drawings\Detailed Design\YAP-180-031 Drainage Construction Details Sheet 2 of 2.dwg

ARUN DISTRICT COUNCIL Y/111221/DOC