**PROJECT: BURNDELL ROAD, YAPTON**

**CLIENT: BOVIS HOMES SOUTHERN HOME COUNTIES**

**PROJECT REFERENCE: PR10869**

| Issue | Revision Description | Date | Engineer | Approved |
|---|---|---|---|---|
| A | Initial submission to Southern Water for approval / comment | 27.03.2019 | P. Warner | P. Warner |
| B | Structural drawings added into Appendix E, M&E drawings brought in line | 08.05.2019 | P. Warner | P. Warner |
| C | Rising main length altered, minor adjustment to levels plus associated changes | 21.05.2019 | P. Warner | P. Warner |
| | | | | |
| | | | | |
| | | | | |

PDAS
Pump Design and Services Ltd

Unit 7
Stanhope Gate
Stanhope Road
Camberley
Surrey
GU15 3DW

[redacted]



ARUN DISTRICT COUNCIL Y/101/19/DOC

**CONTENTS**

1: Specification.

2: Hazardous Area Classification

3: Design Inflow and Proposed Discharge.

4: Rising Main / Surge Analysis

5: Emergency Storage

6: Retention Times and Chemical Dosing

7: Pump Duty and Selection

8: Pump Station Layout

9: Pump and Level Control Cabling

10: Control Equipment

11: Telemetry Equipment

12: Access Covers

13: Lifting Equipment

14: Penstock Valve

15: Baffle Plate

16: Services

17: Appendices

A. Summary
B. Hydraulic Calculations, System and Performance Curves and Pump Dimensions
C. Storage Calculations
D. Hazardous Area Certification
E. Pump Station M&E and Structural Drawings
F. Wiring Diagrams



ARUN DISTRICT COUNCIL Y/101/19/DOC

**1: Specification**

This proposal is based on equipment providing compliance with the Southern Water Services MED 4006 Issue 2 Supplementary Addendum to the Sewers for Adoption 7th (SFA7) Edition specification as obtained from the WRC Website at the time of this submission.

**2: Hazardous Area Applications**

**Application - Pumping Station**

The pump station is designed to serve the domestic gravity foul inflow from 108 domestic dwellings which are a combination of houses and apartments.

Sewage enters the pump station wet well via a foul water gravity network as designed by Odyssey. Details of the foul water drainage including location of the foul water pumping station can be found on drainage layouts supplied under separate cover by them.

Surface water run-off from impermeable areas is being handled by a separate storm water drainage system.

The pumping station transfers the sewage/foul water via a rising main to the Southern Water network

The pumping station compound will have an area designed for the parking of maintenance vehicles/tankers. The pumping station hardstanding is designed to drain to the inlet manhole.

**Flammable atmospheres**

Decomposition of raw sewage is not considered a source of an explosive atmosphere. The worst-case flammable atmosphere that may exist in a sewage pumping station is hydrocarbon contamination from industrial discharges or tanker spillages. As the actual contaminant is not known the content of the flammable atmosphere cannot be specific, but will typically be the lighter more volatile hydrocarbons such as pentane from petrol.

**Hazardous area classification**

The pumping station is designated as a hazardous area, due to the risk of contaminated sewage entering. The inlet, storage chambers and pump have been classified as zone 2 internally in accordance with the Southern Water MED4006 guidelines. As the valve chamber can share the same atmosphere we have zoned the valve chamber also as a zone 2 environment.

A Zoning Plan is shown on drawing PR10869-006

**Equipment category and certification**

All new equipment intended to be located in an area classified as zone 1, has to be certified as equipment **group II category 2 G** equipment (or better). For zone 2 the new equipment shall be certified as equipment **group II category 3 G** equipment (or better). Please refer to Appendix D for the manufacturer's certificates for the equipment within the Hazardous Area as defined.

**3: Design Inflow and Proposed Discharge**

The development served by this pump station comprises of 108 domestic dwellings which are a combination of houses and apartments.

Based on the 4000 litres per day per dwelling criteria detailed in the Sewers for Adoption 7th Edition specification we calculate the design flow from 108 dwellings to be 5.00l/s.

Clause D4.6 of the SFA7 specification details that the pump discharge rate is to be at least half the design flow (2.500l/s) or that to provide a self-cleansing velocity in the rising main. We are proposing the rising main is a 125mm OD PE100 SDR11 pressure pipe with a 101.3mm bore through which a minimum 6.1l/s would be required.



ARUN DISTRICT COUNCIL Y/101/19/DOC

Southern Water also have a requirement for a velocity in the pump station pipework of between 1.2m/s and 2m/s which for the 100mm pump station pipework for this site equates to a minimum 9.4l/s.

The highest of the requirements is the 1.2m/s velocity in the pump station pipework and our duty calculations and pump selection are based on a discharge rate of 9.4l/s. The actual discharges are detailed in the relevant sections below which verify this criteria is met in the normal operating cycle.

**4: Rising Main and Surge Analysis**

The use of a 125mm OD PE100 SDR11 pressure pipe with a 101.3mm bore is proposed.

The rising main is 354.628m long. As the rising main is less than 500m we do not propose to prepare a surge analysis report in this instance.

There is a high point on the rising main at the valve chamber where a double orifice sewage rated stub type air valve with 80mm gate valve with bevel gearbox would be installed. There is a further high point at a chainage of 127.951m where an air valve assembly would also be installed. There are low points on the rising main at chainages of 31.332m and 263.506m where washout assemblies would be installed. Please refer to the drawings in Appendix E for details

**5: Emergency Storage**

The emergency storage has been calculated in accordance with SFA7 Clause D4.5.3 at a rate of 160 litres dwelling. For the 108 dwellings this equates to a requirement of 17.280m$^3$.

Clause D4.5.2b in SFA 7 details that storage can be provided within any upstream public sewers and public lateral drains and associated manholes and inspection chambers above high-level alarm and up to the upstream end of the lowest public lateral drain. The lowest connected inspection chambers are located off manholes F12 and F13 both having an invert level of 5.390m.

Referring you to the storage calculations in Appendix C you will see there is 31.200m$^3$ of storage in the manholes and 6.101m$^3$ in the pipe runs which totals 37.300m$^3$ and is in excess of that required. On the basis the wet well is sized for normal pump operation only this contributes a further 10.134m$^3$ resulting in an overall storage capacity of 47.434m$^3$ which is 2.7 times more than required.

**6: Retention Time and Septicity Control Equipment**

Our calculations indicate that with the development half completed the retention time in the system is 3.44 hours and when fully completed 1.72 Hours. Both are less than the 6-hour figure after which septicity is considered to be a problem, so we don't propose a chemical dosing system for this site.

Should problems be encountered with low flows leading to septicity during the early stages of the development they would be dealt with using temporary measures.

**7: Pump Duty and Selection**

From the site data available we calculate the pump duty from mid water level to be 9.4l/s against a total head of 9.31m for which we have selected submersible sewage pumps from the Xylem NP3102MT range fitted with 462 impellers and 3.1kw explosion proof motors.



ARUN DISTRICT COUNCIL Y/101/19/DOC

The pumps would provide the following theoretical discharge rates from key operating levels.

| Operating Level | Discharge Rate (l/s) |
|---|---|
| Pump Stop | 9.54 |
| Mid Water Level | 9.72 |
| Duty Pump Start | 9.91 |
| Standby Pump Start | 9.97 |
| High Level Alarm | 10.00 |
| Inlet | 10.10 |
| Maximum Storage Level | 11.30 |

As can be seen these pumps would discharge 9.72l/s from mid water level level which equates to a velocity of 1.24m/s within the pump station pipework thus satisfying the requirement of the MED4006 document of between 1.2m/s and 2m/s.

Pumps would be installed into the wet well on Stainless Steel guiderails. Pumps would be fitted with a nylon rope lifting system.

As the pumps are rated lower than the 7.5kw rating detailed in clause F2.3.16 of the SFA7 specification we do not propose to fit the pumps with a seal leakage detection system in this instance.

We propose that the benching in the Wet Well is laid with a self-cleaning profile and as such it is not proposed to fit a Flush Valve to the Pumps.

We have attached our hydraulic calculations, system curves and pump performance details in Appendix B

**8: Pump Station Layout**

The pumps, pipework and valves would be installed within concrete chambers constructed by others to a layout as shown on our drawings PR10869 -001 to 008 contained in Appendix E. These are to be read in conjunction with structural drawings also contained in Appendix E.

The non-return valves would be fitted with levers, weights and guards and the gate valves would be fitted with extension spindles.

The valve chamber forms an intermediate high point and a double orifice sewage rated stub type air valve with 80mm gate valve with bevel gearbox would be installed in the confines of the chamber.

The pump station pipework would terminate a short distance outside the valve chamber in a 100mm nominal bore plain ended pipe from where provision of the rising main and connecting it to the pump station pipework would be the responsibility of others.

A 100mm valve chamber drain would be installed with a gate valve installed over this in the valve chamber and a flap valve over the pipe in the wet well.

**9: Pump and Level Control Cabling**

Pumps and level controls would be wired back to the control panel via intermediate junction boxes housed within a floor fixing GRP Kiosk 750mm Wide x 400mm Deep x 1250mm High all as illustrated on our drawings.

We have allowed for sealing the two 150mm pump cable ducts and one 100mm level control cable duct with a RISE cable transit system at the junction box kiosk end only.



ARUN DISTRICT COUNCIL Y/101/19/DOC

**10: Control Equipment**
Automatic level control would be via a Siemens Hydroranger 200 ultrasonic level controller augmented by 2 separate float switches for high level and back up control, all wired back to a multi compartment control panel complying with the SWS MED4006 Issue 1 Addendum to the Sewers for Adoption 7th Edition Specification.

The control panel would be installed within a floor fixing GRP kiosk of dimensions 2000mm wide x 1750mm high x 750mm deep. The GRP kiosk has a meter compartment with a separate lockable door. Please refer to Appendix F for wiring diagrams and kiosk layout.

**11: Telemetry Equipment**
A Multiform M40 Telemetry Outstation would be installed. Configuration on to the Southern Water network would be organised by the developer, at their expense direct with Southern Water.

**12: Access Covers**
We are proposing Steelway Stamp Lock Pro Lift Facta B access covers in compliance with SFA7 D6.7 for the inlet manhole, wet well and valve chamber.

The access covers have torsion spring assisted lift lids, internal safety grids for fall protection and demountable barriers and posts. The wet well cover would be of a Twin Lid design as preferred by Southern Water.
Sizes are as follows

| Chamber | Size |
|---|---|
| Inlet Manhole | 1000 x 750mm (Single Lid) |
| Wet Well | 1500 x 900mm (Twin Lid) |
| Valve Chamber | 2500 x 1800mm (Multi Lid) |

**13: Lifting Equipment**
We propose that a REID Porta lifting davit be provided complete with a single cast in type davit socket all rated for 500kg SWL with the davit socket in the position as shown on the PDAS drawings.

**14: Penstock Valve**
A wall mounting penstock valve would be mounted in the inlet manhole over the outgoing 150mm foul sewer to the wet well. The penstock will be complete with a non rising spindle, spindle support brackets, tee key and top box.

**15: Baffle Plate**
A galvanised steel baffle plate would be fitted over the 150mm diameter incoming sewer in the wet well

**16: Services**
It would be the responsibility of our client to provide a suitably rated 400-volt 3 Phase and neutral power supply to the control panel and a PSTN line for the telemetry outstation.

**17: Appendices**



ARUN DISTRICT COUNCIL Y/101/19/DOC

**Appendix A**
**Summary**



ARUN DISTRICT COUNCIL Y/101/19/DOC

**Data Summary**

| | |
|---|---|
| Liquid Handled | Foul Water |
| Number of Pumps | 2 |
| Control Philosophy | Duty / Standby |
| Capacity per Pump (l/s) | 9.4 |
| Head Generated (m) | 9.31 |
| Pump Manufacturer | Xylem |
| Pump Type | NP3102MT |
| Impeller Type / Reference | N / 462 |
| Solids Handling (mm) | N/A |
| Hazardous Area Rating of Pump | EXP |
| Motor Rating (kw) | 3.1 |
| Speed (rpm) | 1450 |
| Electric Supply | 230/400V 50Hz, 3 Phase |
| Full Load Current (Amps) | 6.8 |
| Method of Starting | Direct on Line |
| Length of Cables | 20 |
| Level Controls | Siemens Hydroranger 200 Ultrasonic plus high level and back up float switches |
| Wet Well Diameter (mm) | 2400 |
| Wet Well Depth (m) | 5.000 |
| Station Pipes and Valves (mm) | 100 |
| Station Final Discharge Pipe (mm) | 100 |
| Pump Station Pipe Material | Ductile Iron |
| Rising Main(By Others) | 125mm OD PE100 SDR11 (101.3mm Bore) |
| Access Covers (Supply Only) | Manufacturer: Steelway Prolift<br>Rating: FACTA B<br>Inlet Manhole 1000 x 750mm (Single Lid)<br>Wet Well 1500 x 900mm (Twin Lid)<br>Valve Chamber 2500 x 1800mm (Multi Lid) |
| Inlet Diameter (mm) | 150 |
| Penstock (Supply Only) | 150mm Cast Iron in inlet manhole |
| General Arrangement Drawings | PR10869 – 001 to 008 |



ARUN DISTRICT COUNCIL Y/101/19/DOC

**Materials Specification**

| | |
|---|---|
| **Pump Station Type** | **Submersible – Guiderail Mounted Pumps** |
| **Base Specification** | **Sewers For Adoption 7th Edition** |
| **Addendum** | **Southern Water MED4006 Issue 2, June 2018** |

**PUMP:**
Single stage fully submersible pump with cast iron case and impeller, which is securely locked to the fully protected motor shaft extension. Impeller as data section.

**SEAL CHAMBER:**
Buffer chamber between pump and motor, charged with oil retained by opposing seals.

**MOTOR:**
Squirrel cage induction motor of watertight IP68 enclosure suitable for continuous service and having Klixon lock out circuit for over-temperature protection on Explosion Proof motors.

**CABLE:**
Suitable length(s) of multi-core VRI PCP sheathed flexible cable connected through watertight gland(s) to the motor windings.

**DUCKFOOT:**
Cast iron floor fixing duckfoot bend (or pedestal with elbow) incorporating guiderail socket(s) and self-locating boltless pump quick release coupling.

**GUIDERAILS:**
Stainless Steel rail(s) for attachment to cover slab or ground level steelwork and extending to duckfoot sockets. Complete with necessary location brackets.

**LIFTING LOCATION SYSTEM:**
Nylon lifting rope for pulling into position certified lifting chains carried by Southern Water personnel.

**REFLUX VALVE:**
Fullway pattern delivery non-return valve.

**SLUICE VALVE:**
Fullway pattern isolating sluice valve with non-rising spindle and cap top.

**PIPES:**
From duckfoot through to defined point for rising main connection, incorporating the valves and, in case of multi-pump system, an appropriately sized manifold. All fitting connections appropriate to materials employed.

**LEVEL CONTROLS:**
Siemens Hydroranger 200 ultrasonic level control unit as data sheet complete with submersible transducer, bracket and cable to control panel, with float switches for ultrasonic backup control and high level alarm functions.



ARUN DISTRICT COUNCIL Y/101/19/DOC

**ACCESS COVERS:** (Supply Only)
Inlet Chamber – Steelway Stamp Lock Pro Lift Access Cover and Frame providing a clear opening of 1000mm x 750mm complete with torsion spring assisted lift galvanised steel lids, self-locating safety stays, recessed pad lock facility, 2 no turn catch locking devices, hinged internal safety grids for fall protection, demountable barriers and posts.

Pump Chamber – Steelway Stamp Lock Pro Lift Access Cover and Frame providing a clear opening of 1500mm x 900mm complete with torsion spring assisted lift galvanised TWIN steel lids, self-locating safety stays, recessed pad lock facility, 2 no turn catch locking devices, hinged internal safety grids for fall protection, demountable barriers and posts.

Valve Chamber – Steelway Stamp Lock Pro Lift Access Cover and Frame providing a clear opening of 2500mm x 1800mm complete with torsion spring assisted lift galvanised steel lids, self-locating safety stays, recessed pad lock facility, 2 no turn catch locking devices, hinged internal safety grids for fall protection, demountable barriers and posts.

**LIFTING EQUIPMENT:** (Supply Only)
1 - Reid type ADV500 lifting davit
1 - Reid davit socket to suit the above lifting davit

**NOTE:**
If lifting equipment is supplied site load testing of items cast into cover slab by ground-workers is excluded from our offer.

**JUNCTION BOX KIOSK:**
GRP, floor fixing, single door weatherproof lockable enclosure in deep green textured finish, provisional dimensions 1250H x 750W x 400D containing a full sized backboard on which would be mounted / provided:-

a) Individual junction boxes for Pump 1, Pump 2 and level controls.

**CONTROL PANEL KIOSK:**
GRP, floor fixing three door weatherproof lockable enclosure in deep green textured finish, provisional dimensions 1750H x 2000W x 750D containing a full sized backboard on which would be mounted / provided:-

b) Control panel as specified.
c) Anti-condensation heater and thermostat.
d) Interior light and switch.
e) Set of suitably rated double insulated cable tails for connection to Electricity Board meters.
f) Minimum 600 x 450 clear space for the mounting of Electricity Board meters.
g) Multiform M40 Telemetry Outstation

**The whole of the above being suitably interconnected and earth bonded extended to all non-conductive steelwork within the pump station in 16mm$^2$ cable to provide a complete PME system.**

**GENERATOR EARTH:**
Comprising a copper electrode to be driven into the ground adjacent to the control kiosk, a concrete inspection pit and interconnecting cable to the panel.



ARUN DISTRICT COUNCIL Y/101/19/DOC

**ANCILLARY EQUIPMENT:**

1. Lever arm and weights on non-return valves
2. Guards on non-return valves
3. Pressure tappings on valve chamber pipe work
4. 100mm Bauer coupling on over pumping tee
5. Rubber matting in control panel kiosk
6. 150mm cast iron Inlet penstock valve c/w extension spindle, brackets, tee key and surface box.
7. 150mm baffle plate
8. 100mm valve chamber drain with gate valve located over it in valve chamber and flap valve in wet well
9. 3 Hard copies of operating and maintenance manuals or one electronic copy in PDAS Ltd standard format



ARUN DISTRICT COUNCIL Y/101/19/DOC

**Appendix B**

**Hydraulic Calculations, System Curves and Performance Curves and Dimensional Data**



ARUN DISTRICT COUNCIL Y/101/19/DOC

PDAS Ltd
Unit 7 Stanhope Gate
Stanhope Road
Camberley
Surrey GU15 3DW

PDAS
Pump Design and Services Ltd

[redacted]

| | |
|---|---|
| Quote Reference | Q10276 |
| Date | 21.05.2019 |
| Project Reference | PR10869 |
| Date | 21.05.2019 |

| | |
|---|---|
| Clients Name | Bovis Homes, Southern Home Counties |
| Site Address | Burndell Road, Yapton |

| | |
|---|---|
| Adopting Authority | Southern Water |
| Pump Station Type | Foul |
| Number of Dwellings | 108 |
| Non Domestic Area (M2) | |
| Non Domestic Rate (l/s Hectare) | |
| Number of Pumps | 2 |
| Number of Duty Pumps | 1 |

| Design Flow / Rising Main | | |
|---|---|---|
| Design Flow (& SFA 6 Discharge) | 5.00 | l/s |
| Pump Discharge Rate 7th Edition | 2.50 | l/s |
| Pump Discharge Rate | 9.4 | l/s |
| Rising Main I.D | 101.3 | mm |
| Velocity in Main | 1.17 | m/sec |
| Surge Analysis | NOT REQUIRED | |

| | |
|---|---|
| Cover Level | 7.000 |
| VC Outlet | 5.860 |
| Max Storage | 5.390 |
| Inlet | 3.250 |
| HLA | 3.150 |
| P2 Start | 3.050 |
| P1 Start | 2.950 |
| Mid Water | 2.625 |
| Stop Level | 2.300 |
| Dead Area | 300 |
| Base Level | 2.000 |

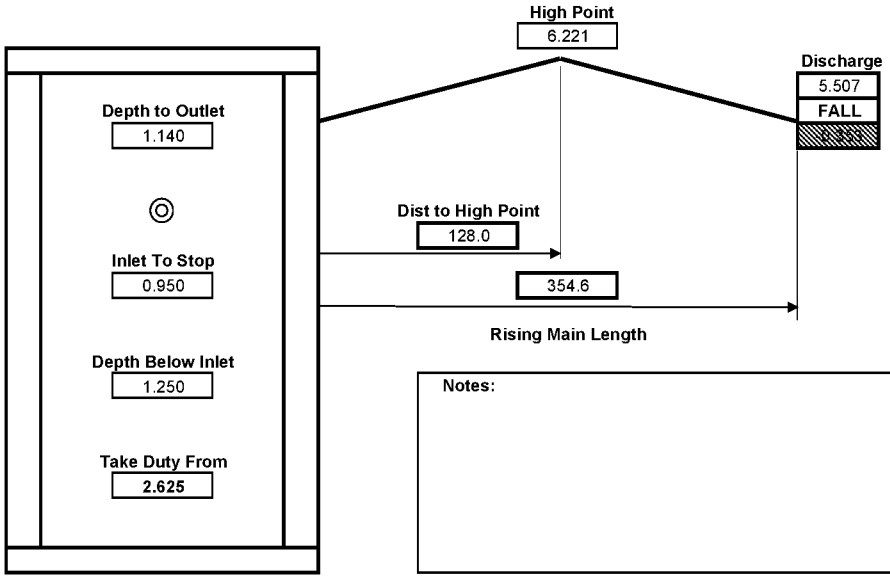


Notes:

| Wet Well | | |
|---|---|---|
| Wet Well Diameter | 2400 | mm |
| Calc Chamber Depth | 4.599 | m |
| Volume Per M | 4,523.89 | litres |
| Depth Between Starts | 100 | mm |
| Actual Chamber Depth | 5.000 | m |
| Theoretical Op Volume | 1,128.00 | litres |
| Actual Op Volume | 1,831.42 | litres |
| Max Theoretical Starts | 7.50 | |
| Actual Starts | 4.78 | |

| Retention Calculations | | |
|---|---|---|
| Dwf Inflow Per Day | 65,454.55 | litres |
| Rising Main Volume | 2,858.13 | litres |
| Combined Main and Op Vol | 4,689.55 | litres |
| No. of Main Clears per Day | 13.96 | |
| Retention Full Usage | 1.72 | Hours |
| Retention Half Usage | 3.44 | Hours |

*Retention calcs assume ascending rising main*

| Storage | | |
|---|---|---|
| Domestic @ 160L / Dwelling | 17.280 | m3 |
| Industrial 1 Hr @ Design Flow | 0.000 | m3 |
| Total Required Storage | 17.280 | m3 |
| Capacity in Gravity System | 17.280 | m3 |
| Capacity between HLA & inlet | 452.39 | litres |

| | Rising Main | Common 3 | Common 2 | Common 1 | Individual 3 | Individual 2 | Individual 1 |
|---|---|---|---|---|---|---|---|
| Flow Rate (l/sec) | **9.40** | 9.40 | 9.40 | 9.40 | 9.40 | 9.40 | 9.40 |
| Static Head (M) | **2.88** | | | | | | |
| Pipe Diameter (mm) | 101.30 | 100 | 100 | 100 | 100 | 100 | 100 |
| Velocity (M/sec) | 1.17 | 1.20 | 1.20 | 1.20 | 1.20 | 1.20 | 1.20 |
| Roughness Factor | 0.15 | 0.15 | 0.15 | 0.15 | 0.15 | 0.15 | 0.15 |
| Pipe length (M) | 354.628 | | | | | **9** | |
| Duckfoot Bend | | | | | | | **1** |
| Short Radius Bends | | | | | | **1** | |
| Long Radius Bends | **4** | | | | | **1** | |
| Tee Straight through | | **3** | | | | **3** | |
| Tee through branch | | | | | | | |
| Radial Tee thro Branch | | | | | | | |
| Sluice Valve | | | | | | **1** | |
| Non Return Valve | | | | | | **1** | |
| Bellmouth inlet | | | | | | | |
| Sharp Taper | | | | | | | |
| Standard Taper | | | | | | | |
| Equivalent Pipe Length (M) | 361.9216 | 3.3 | 0 | 0 | 0 | 22.7 | 3.4 |
| Reynolds Number | 1.0E+05 | 1.0E+05 | 1.0E+05 | 1.0E+05 | 1.0E+05 | 1.0E+05 | 1.0E+05 |
| Darcy-Weisbach Friction Factor | 0.0236 | 0.0237 | 0.0237 | 0.0237 | 0.0237 | 0.0237 | 0.0237 |
| Velocity Head | 0.069 | 0.073 | 0.073 | 0.073 | 0.073 | 0.073 | 0.073 |
| Hydraulic (Piezometric) gradient | 0.0162 | 0.0173 | 0.0173 | 0.0173 | 0.0173 | 0.0173 | 0.0173 |
| Friction Head Loss | 5.848 | 0.057 | 0.000 | 0.000 | 0.000 | 0.392 | 0.059 |

| Calc Duty Point | | |
|---|---|---|
| Flow | **9.40** | l/s |
| Static Head | **2.88** | m |
| Total Head | **9.31** | m |

| Pump Selection | |
|---|---|
| Pump Type | NP3102MT |
| Impeller | 462 |
| Kw Rating | 3.1 |

| Actual Duty | | |
|---|---|---|
| Flow | **9.72** | l/s |
| Head | **9.74** | m |

# NP 3102 MT 3~ Adaptive 462

Patented self cleaning semi-open channel impeller, ideal for pumping in most waste water applications. Possible to be upgraded with Guide-pin® for even better clogging resistance. Modular based design with high adaptation grade.

## Technical specification

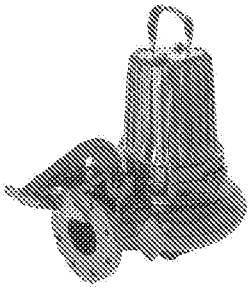

Curves according to: Water, pure [100%] ; 4°C; 999.9kg/m³; 1.569mm²/s

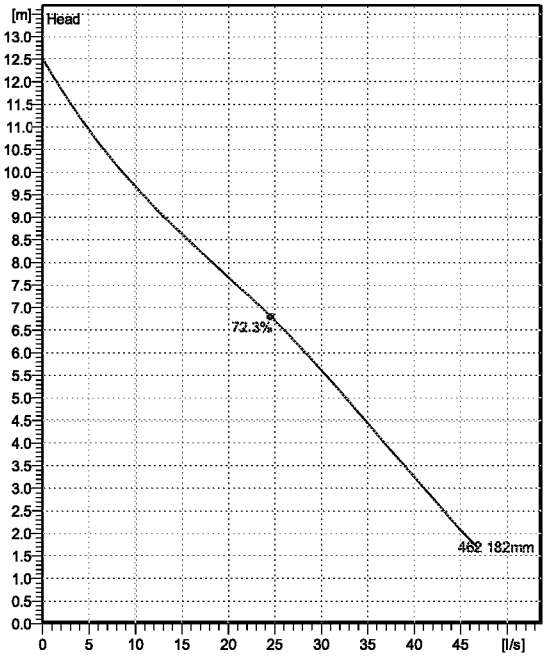


### Configuration

**Motor number**
N3102.190 18-11-4AL-W 3.1KW

**Installation type**
P - Semi permanent, Wet

**Impeller diameter**
182 mm

**Discharge diameter**
100 mm

### Pump information

**Impeller diameter**
182 mm

**Discharge diameter**
100 mm

**Inlet diameter**
100 mm

**Maximum operating speed**
1450 rpm

**Number of blades**
2

### Materials

**Impeller**
Grey cast iron

**Stator housing material**
Grey cast iron

| | | |
|---|---|---|
| **Project** | **Created by** | **Last update** |
| **Block** | **Created on** 5/21/2019 | |

# NP 3102 MT 3~ Adaptive 462

## Technical specification

a xylem brand

### Motor - General

| | | | |
|---|---|---|---|
| **Motor number**<br>N3102.190 18-11-4AL-W 3.1KW | **Phases**<br>3~ | **Rated speed**<br>1450 rpm | **Rated power**<br>3.1 kW |
| **Approval**<br>EN | **Number of poles**<br>4 | **Rated current**<br>6.8 A | **Stator variant**<br>61 |
| **Frequency**<br>50 Hz | **Rated voltage**<br>400 V | **Insulation class**<br>H | **Type of Duty**<br>S1 |

### Motor - Technical

| | | | |
|---|---|---|---|
| **Power factor - 1/1 Load**<br>0.78 | **Motor efficiency - 1/1 Load**<br>84.0 % | **Total moment of inertia**<br>0.0275 kg m² | **Starts per hour max.**<br>30 |
| **Power factor - 3/4 Load**<br>0.71 | **Motor efficiency - 3/4 Load**<br>84.0 % | **Starting current, direct starting**<br>40 A | |
| **Power factor - 1/2 Load**<br>0.58 | **Motor efficiency - 1/2 Load**<br>82.0 % | **Starting current, star-delta**<br>13.3 A | |

| | | |
|---|---|---|
| **Project** | **Created by** | **Last update** |
| **Block** | **Created on** 5/21/2019 | |

# NP 3102 MT 3~ Adaptive 462

## Performance curve

a xylem brand

### Duty point

| Flow | Head |
|---|---|
| 9.72 l/s | 9.74 m |

Curves according to: Water, pure [100%] ; 4°C; 999.9kg/m³; 1.569mm²/s

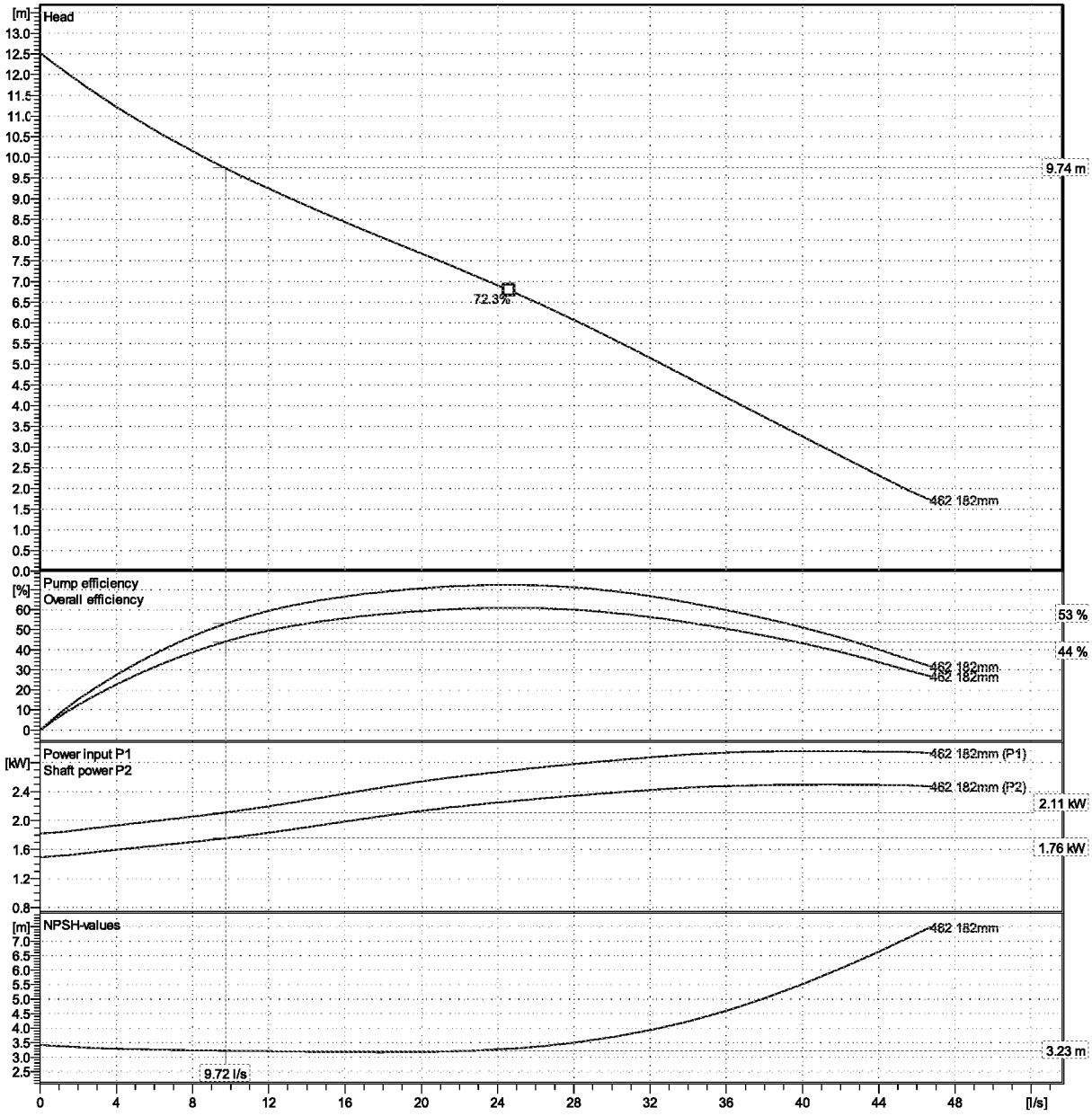


| Project | Created by | Last update |
|---|---|---|
| Block | Created on 5/21/2019 | |

# NP 3102 MT 3~ Adaptive 462

## Duty Analysis

Curves according to: Water, pure [100%] ; 4°C; 999.9kg/m³; 1.569mm²/s

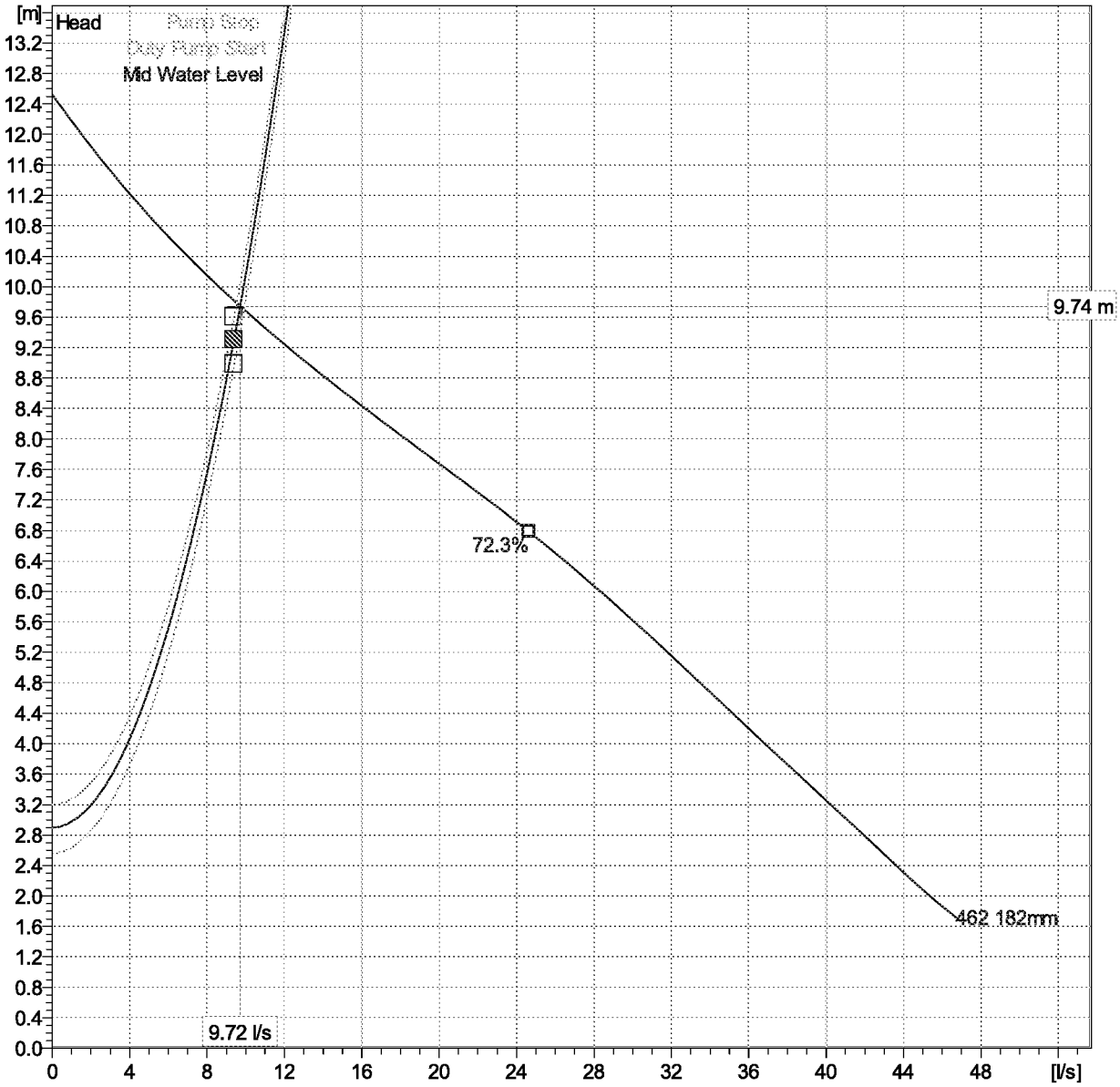


### Operating characteristics

| Pumps running /System | Individual pump | | | Total | | | | | |
|---|---|---|---|---|---|---|---|---|---|
| Duty Pump Start | 9.91 l/s | 9.7 m | 1.76 kW | 9.91 l/s | 9.7 m | 1.76 kW | 53.6 % | 0.0593 kWh/m³ | 3.22 m |
| Mid Water Level | 9.72 l/s | 9.74 m | 1.76 kW | 9.72 l/s | 9.74 m | 1.76 kW | 53 % | 0.0603 kWh/m³ | 3.23 m |
| Pump Stop | 9.54 l/s | 9.79 m | 1.75 kW | 9.54 l/s | 9.79 m | 1.75 kW | 52.4 % | 0.0613 kWh/m³ | 3.23 m |

| | | | | | |
|---|---|---|---|---|---|
| **Project** | | **Created by** | | **Last update** | |
| **Block** | | **Created on** | 5/21/2019 | | |

# NP 3102 MT 3~ Adaptive 462

## Duty Analysis

Curves according to: Water, pure [100%] ; 4°C; 999.9kg/m³; 1.569mm²/s

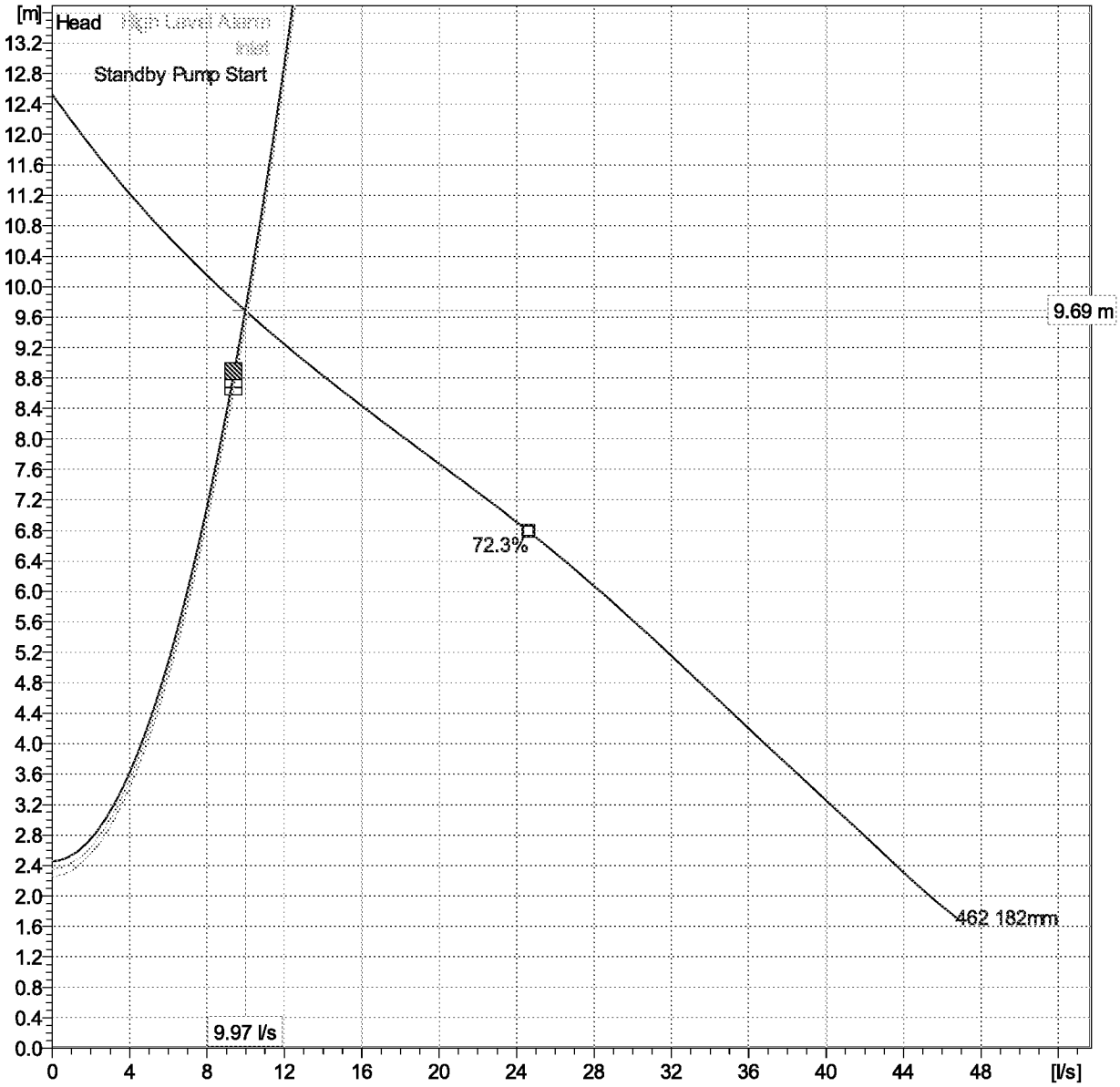


### Operating characteristics

| Pumps running /System | Individual pump | | | Total | | | | | |
|---|---|---|---|---|---|---|---|---|---|
| Inlet | 10.1 l/s | 9.66 m | 1.77 kW | 10.1 l/s | 9.66 m | 1.77 kW | 54.1 % | 0.0585 kWh/m³ | 3.22 m |
| High Level Alarm | 10 l/s | 9.67 m | 1.77 kW | 10 l/s | 9.67 m | 1.77 kW | 54 % | 0.0587 kWh/m³ | 3.22 m |
| Standby Pump Start | 9.97 l/s | 9.69 m | 1.76 kW | 9.97 l/s | 9.69 m | 1.76 kW | 53.8 % | 0.059 kWh/m³ | 3.22 m |

| | | | |
|---|---|---|---|
| **Project** | | **Created by** | **Last update** |
| **Block** | | **Created on** | 5/21/2019 |

# NP 3102 MT 3~ Adaptive 462

## Duty Analysis

Curves according to: Water, pure [100%] ; 4°C; 999.9kg/m³; 1.569mm²/s

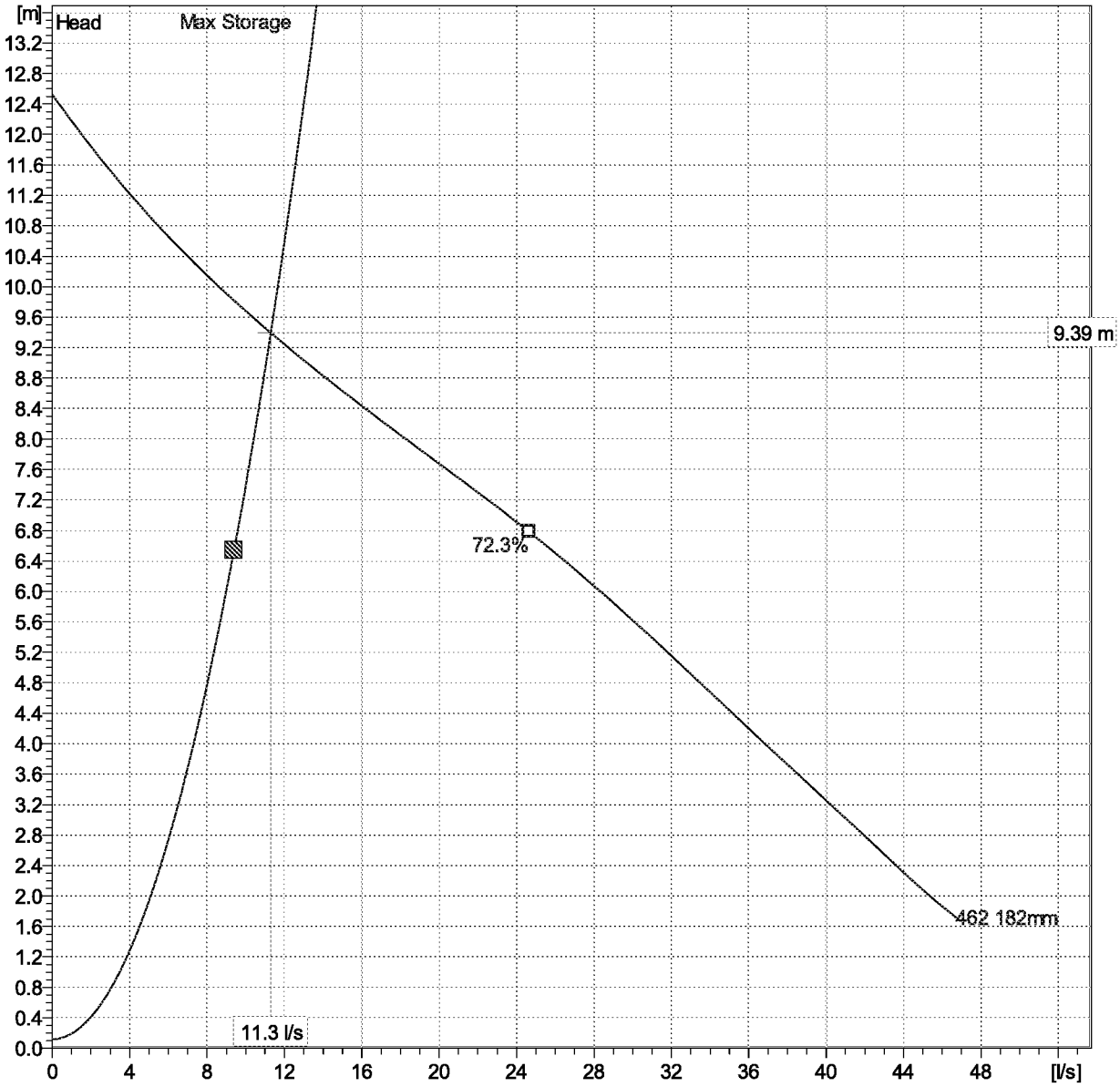


### Operating characteristics

| Pumps running /System | Individual pump | | | Total | | | | | |
|---|---|---|---|---|---|---|---|---|---|
| Max Storage | 11.3 l/s | 9.39 m | 1.81 kW | 11.3 l/s | 9.39 m | 1.81 kW | 57.6 % | 0.0533 kWh/m³ | 3.21 m |

| | | | |
|---|---|---|---|
| **Project** | | **Created by** | **Last update** |
| **Block** | | **Created on** | 5/21/2019 |

# NP 3102 MT 3~ Adaptive 462

## Dimensional drawing

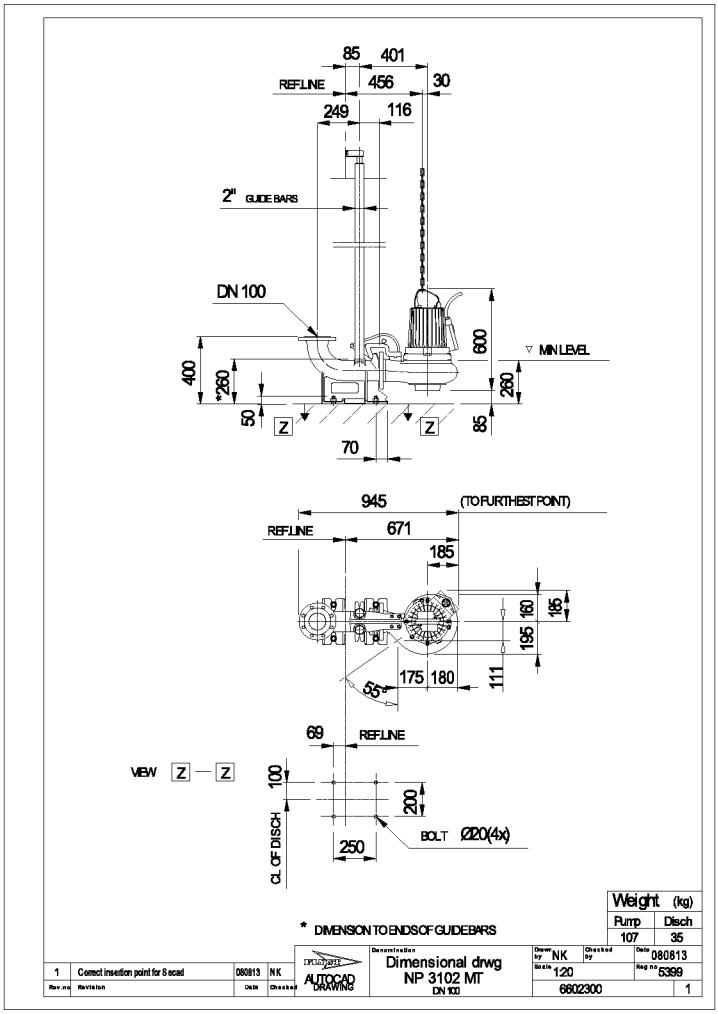


| Rev.no | Revision | Date | Checked |
|---|---|---|---|
| | | | |
| | | | |

| | | |
|---|---|---|
| **Project** | **Created by** | **Last update** |
| **Block** | **Created on** 5/21/2019 | |

**Xylem Water Solutions AB**
Gesällvägen 33, SE-174 87 Sundbyberg
[redacted]

xylem
Let's Solve Water

# To whom it may concern

November 22, 2012

## Flygt products for use in pump stations

According to a statement made by the European Pump Manufacturer's Association (Europump), a submersible pump shall not run dry. This has been determined based on risk analyses made for the directive on "Products for use in potentially explosive environment" (ATEX).

In the care of maintenance manuals for our Ex products, we state that the stop level in an installation with regards to our products should be above the pump housing.

However, in certain installations, it is safe to run the "Ex" pump to a stop level equal to the pump inlet level "snore" for a short period, not exceeding 3 seconds, to perform a cleaning function in the pump sump.

The reason for this statement is that during such short periods there is always the presence of liquid around and in the inlet to the pump thus making it safe from the emergence of sparks and heat.

It is not however, permissible to allow a pump to run for extended periods on "snore" The control system should initiate a stop condition once "snore" has been detected.

**Xylem Water Solutions AB**
Approval Coordinator

Anders Edh

**Appendix C**
**Storage Calculations**



ARUN DISTRICT COUNCIL Y/101/19/DOC

**PDAS Ltd**
**Unit 7 Stanhope Gate**
**Stanhope Road**
**Camberley**
**Surrey GU15 3DW**
[redacted]

PDAS
Pump Design and Services Ltd

| | |
|---|---|
| **Quote Reference** | Q10276 |
| **Date** | 27.03.2019 |
| **Project Reference** | PR10869 |
| **Date** | 27.03.2019 |

| | |
|---|---|
| **Clients Name** | Bovis Homes, Southern Home Counties |
| **Site Address** | Burndell Road, Yapton |

| **Storage Requirement** | | |
|---|---|---|
| **Number of Dwellings** | 108 | |
| **Non Domestic Design Flow** | 0 | l/s |
| **Domestic @ 160L / Dwelling** | 17.280 | m3 |
| **Industrial 1 Hr @ Design Flow** | 0.000 | m3 |
| **Total Required Storage** | 17.280 | m3 |
| **Location of Lowest Private Manhole** | Off F12 & F13 | |
| **Invert Level of Lowest Private Manhole** | 5.390 | m |

**Notes:**

**Storage in Gravity Manholes**

| Manhole Reference | Manhole Diameter (mm) | Max Storage Level (m) | Cover Level (m) | Invert Level (m) | Storage Volume (m3) | Private Manhole Invert (m) |
|---|---|---|---|---|---|---|
| Inlet | 1500 | 5.390 | 7.000 | 3.300 | 3.693 | |
| F30 | 1200 | 5.390 | 6.600 | 3.420 | 2.228 | 6.050 |
| F29 | 1200 | 5.390 | 6.673 | 4.039 | 1.528 | |
| F28 | 1200 | 5.390 | 6.991 | 4.210 | 1.335 | 5.485 |
| F27 | 1200 | 5.390 | 6.662 | 4.487 | 1.021 | |
| F26 | 1200 | 5.390 | 6.617 | 4.554 | 0.945 | |
| F25 | 1200 | 5.390 | 6.691 | 4.621 | 0.870 | |
| F24 | 1200 | 5.390 | 6.837 | 4.695 | 0.786 | 5.585 |
| F22 | 1200 | 5.390 | 7.419 | 5.334 | 0.063 | 5.935 |
| F21 | 1200 | 5.390 | 7.308 | 5.708 | 0.000 | 5.855 |
| F20 | 1200 | 5.390 | 6.509 | 3.482 | 2.158 | 6.050 |
| F19 | 1200 | 5.390 | 6.521 | 3.532 | 2.101 | |
| F18 | 1200 | 5.390 | 6.633 | 3.598 | 2.027 | |
| F17 | 1200 | 5.390 | 6.649 | 4.281 | 1.254 | 6.010 |
| F16 | 1200 | 5.390 | 7.106 | 4.427 | 1.089 | 6.350 |
| F15 | 1200 | 5.390 | 7.145 | 4.496 | 1.011 | 5.830 |
| F14 | 1200 | 5.390 | 6.932 | 4.656 | 0.830 | |
| F13 | 1200 | 5.390 | 6.786 | 4.748 | 0.726 | 5.390 |
| F12 | 1200 | 5.390 | 6.995 | 5.345 | 0.051 | 5.390 |
| F11 | 1200 | 5.390 | 6.979 | 3.783 | 1.817 | 5.585 |
| F10 | 1200 | 5.390 | 7.602 | 5.288 | 0.115 | 5.940 |
| F9 | 1200 | 5.390 | 7.414 | 5.431 | 0.000 | 6.275 |
| F8 | 1200 | 5.390 | 7.133 | 5.833 | 0.000 | 5.395 |
| F7 | 1200 | 5.390 | 7.499 | 6.199 | 0.000 | 6.650 |
| F6 | 1200 | 5.390 | 7.117 | 4.131 | 1.424 | 5.645 |
| F5 | 1200 | 5.390 | 7.007 | 4.180 | 1.368 | 5.915 |
| F4 | 1200 | 5.390 | 6.921 | 4.224 | 1.319 | 5.550 |
| F3 | 1200 | 5.390 | 7.213 | 4.460 | 1.052 | 5.535 |
| F2 | 1200 | 5.390 | 7.057 | 5.048 | 0.387 | 5.570 |
| F1 | 1200 | 5.390 | 6.714 | 5.414 | 0.000 | 5.700 |
| | | 5.390 | | | 0.000 | |
| **Total storage in manholes below detailed maximum storage level** | | | | | 31.200 | |

**Storage in Gravity Sewer Pipes**

| Sewer Pipe Run | Sewer Diameter (mm) | Max Storage Level (m) | Length (m) | Upper Invert (m) | Storage Volume (m3) |
|---|---|---|---|---|---|
| F1-F2 | 100 | 5.390 | 29.300 | 5.414 | 0.000 |
| F2-F3 | 100 | 5.390 | 43.042 | 5.048 | 0.338 |
| F3-F4 | 150 | 5.390 | 35.434 | 4.460 | 0.626 |
| F4-F5 | 150 | 5.390 | 6.542 | 4.224 | 0.116 |
| F5-F6 | 150 | 5.390 | 7.361 | 4.180 | 0.130 |
| F6-F11 | 150 | 5.390 | 52.221 | 4.131 | 0.923 |
| F7-F9 | 100 | 5.390 | 28.431 | 6.199 | 0.000 |
| F8-F9 | 100 | 5.390 | 28.175 | 5.833 | 0.000 |
| F9-F10 | 150 | 5.390 | 21.379 | 5.431 | 0.000 |
| F10-F11 | 150 | 5.390 | 63.144 | 5.288 | 0.000 |
| F11-F18 | 150 | 5.390 | 27.685 | 3.783 | 0.489 |
| F12-F13 | 100 | 5.390 | 47.782 | 5.345 | 0.000 |
| F13-F14 | 100 | 5.390 | 7.245 | 4.748 | 0.057 |
| F14-F15 | 100 | 5.390 | 8.842 | 4.656 | 0.069 |
| F15-F16 | 150 | 5.390 | 10.325 | 4.496 | 0.182 |



ARUN DISTRICT COUNCIL Y/101/19/DOC

| | | | | | |
|---|---|---|---|---|---|
| F16-F17 | 150 | 5.390 | 18.512 | 4.427 | 0.327 |
| F17-F18 | 150 | 5.390 | 11.297 | 4.281 | 0.200 |
| F18-F19 | 150 | 5.390 | 9.898 | 3.598 | 0.175 |
| F19-F20 | 150 | 5.390 | 7.574 | 3.532 | 0.134 |
| F20-F30 | 150 | 5.390 | 9.248 | 3.482 | 0.163 |
| F21-F22 | 100 | 5.390 | 29.926 | 5.708 | 0.000 |
| F22-F24 | 100 | 5.390 | 47.068 | 5.334 | 0.000 |
| F24-F25 | 150 | 5.390 | 11.157 | 4.695 | 0.197 |
| F25-F26 | 150 | 5.390 | 10.141 | 4.621 | 0.179 |
| F26-F27 | 150 | 5.390 | 9.952 | 4.554 | 0.176 |
| F27-F28 | 150 | 5.390 | 46.226 | 4.487 | 0.817 |
| F28-F29 | 150 | 5.390 | 25.684 | 4.210 | 0.454 |
| F29-F30 | 150 | 5.390 | 6.005 | 4.039 | 0.106 |
| F30-INLET | 150 | 5.390 | 12.430 | 3.420 | 0.220 |
| INLET - WW | 150 | 5.390 | 1.250 | 3.300 | 0.022 |
| | | 5.390 | | | 0.000 |
| **Total storage in sewers below detailed maximum storage level** | | | | | 6.101 |

| **Storage in Wet Well** | | | | | |
|---|---|---|---|---|---|
| | **Wet Well Diameter (mm)** | **Max Storage Level (m)** | | **High Level Alarm (m)** | **Storage Volume (m3)** |
| Pump Station | 2400 | 5.390 | | 3.150 | 10.134 |
| **Total storage in wet well below detailed maximum storage level** | | | | | 10.134 |

| **Summary** | | |
|---|---|---|
| Manholes | 31.200 | m3 |
| Sewers | 6.101 | m3 |
| Pump Station | 10.134 | m3 |
| Total Provided | 47.434 | m3 |
| Total Required | 17.280 | m3 |



ARUN DISTRICT COUNCIL Y/101/19/DOC

**Appendix D**
**Hazardous Area Certification**



ARUN DISTRICT COUNCIL Y/101/19/DOC

INERIS
INSTITUT NATIONAL DE L'ENVIRONNEMENT
INDUSTRIEL ET DES RISQUES

Parc Technologique ALATA
[redacted]

(2) **Equipments and protection systems intended for use in potentially explosive atmospheres Directive 94/9/CE**

# (1) EC-TYPE EXAMINATION CERTIFICATE

(3) Number of the EC type examination certificate: **INERIS 00ATEX0039 X**

(4) Protection apparatus or system:

**PUMP TYPE 439 47 00**

(5) Manufacturer: **ITT FLYGT AB**

(6) Address: Svetsarvägen 12,
Box 1309
17125 SOLNA
SWEDEN

(7) This protection system or equipment and any other acceptable alternative of this one are described in the annex of this certificate and the descriptive documents quoted in this annex.

(8) The INERIS, notified body and identified under number 0080, in accordance with article 9 of Council Directive 94/9/CE 23 the Mars 1994, certifies that this protection system or equipment fulfills the Essential of Health and Safety Requirements relating to the design and construction of equipments and protection systems intended for use in potentially explosive atmospheres, described in appendix II of the Directive.

The examinations and the tests are consigned in official report N° 15932/00.

(9) The respect of the Essential Health and Safety Requirements is ensured by:

- conformity with:

| | | |
|---|---|---|
| EN 50 014 | of June | 1997 |
| EN 50 018 | of August | 1994 |
| EN 1127-1 | of June | 1997 |

- specific solutions adopted by the manufacturer to meet the Essential Health and Safety Requirements described in the descriptive documents.

(10) Sign X, when it is placed following the Number of the EC type examination certificate, indicates that this equipment and protection system is subjected to the special conditions for safe use, mentioned in the annex of this certificate.

This document must not be reproduced other than in its entirety



ARUN DISTRICT COUNCIL Y/101/19/DOC

(11) This certificate of examination EC of the type refers only to the design and the construction of the apparatus or protection system specified. If necessary, other requirements of this Directive will be imposed on the manufacture and the supply of this apparatus or protection system.

(12) The marking of the equipment or the protection system will have to contain:

**Ex II 2 G** **EEx d IIB T4**

Verneuil-en-Halatte, 2000 12 20

[redacted]

X.LEFEBVRE

Engineer at the Laboratory for Certification of ATEX equipment

[redacted]

The Director of the Organisation Certified,
By delegation
B. PIQUETTE
Deputy manager of Certification

INERIS FRANCE



ARUN DISTRICT COUNCIL Y/101/19/DOC

(13) # ANNEX

(14) **EC TYPE EXAMINATION CERTIFICATE n° INERIS 00ATEX0039 X**

(15) **DESCRIPTION OF THE EQUIPMENT OR THE PROTECTION SYSTEM**

Electric pump motor type 439 47 00 intended to equip a submersible mixer or pump. The motor is fitted with thermal probes in windings which ensure its temperature classification.

Connection with the external electric circuits is ensured by the intermediary of cable entries having a certificate of equipment and/or a certificate of component Ex.

Parameters relating to the safety

. Supply voltage : up to 1000 Volts.
. Power according to version : from 3.6 kW to 5.7 kW

Characteristics of protections :

Limit of release of the probe : 125°C ±6% for a class T4

**MARKING**

Marking must be readable and indelible ; it must comprise the following indications:

- **ITT FLYGT AB**
  Svetsarvägen 12,
  Box 1309
  17125 SOLNA
  SWEDEN
- 439 47 00
- INERIS 00ATEX0039 X
- (serial number, if any)
- (year of construction)
- Ex II 2 G **EEx d IIB T4**
- Tamb : -20 °C to 90 °C
- DO NOT OPEN WHEN AN EXPLOSIVE GAS ATMOSPHERE MAY BE PRESENT
- DO NOT OPEN WHEN ENERGIZED
- CONNECT THERMAL PROBES

This document must not be reproduced other than in its entirety, included annexes



ARUN DISTRICT COUNCIL Y/101/19/DOC

The whole of marking can be carried out in the language of the country of use.

The protection apparatus or system must also carry the marking normally envisaged by the standards of construction which relate to it.

**ROUTINE EXAMINATIONS AND TESTS**

The equipment is exempted of the routine test in accordance with 16.2 of the standard EN 50018. The prototype having successfully undergone a static overpressure test of 46 bar.

## (16) DESCRIPTIVE DOCUMENTS

The technical report is composed of the documents quoted hereafter, constituting the descriptive file of the apparatus, object of this certificate.

| | |
|---|---|
| - Descriptive notice (2 pages) | signed on 2000.11.28 |
| - Instructions | signed on 2000.11.28 |
| - Drawing n° 439 47 00 of the 2000.05.23 Rev. 13 | signed on 2000.10.02 |
| - Drawing n° 657 87 00 of the 2000.04.17 | signed on 2000.10.02 |

## (17) SPECIAL CONDITIONS FOR SAFE USE

In order to respect the classification in temperature, the thermal contacts equipping the engine must be connected to a device cutting of the voltage supply of the engine when the probes reach their limit of operation, defined above.

The maximum possible temperature of 105 °C at the input cable entry is present in case of use in dry conditions.

The yield stress of the fastener elements of the envelope must be in conformity with the regulations of approval drawing n° 439 47 00 rev.13.

## (18) ESSENTIAL REQUIREMENTS OF SAFETY AND HEALTH

The respect of the Essential Health and Safety Requirements is ensured by:

- conformity to the European standards EN 50 014, 50 018 and EN 1127-1,
- the whole of the provisions adopted by the manufacturer and described in the descriptive documents.

This document must not be reproduced other than in its entirety, included annexes



ARUN DISTRICT COUNCIL Y/101/19/DOC

# ADDITION

## INERIS 00ATEX0039 X/01

**PUMP TYPE 439 47 00**

**Made by ITT FLYGT AB**

(15) - PURPOSE OF THE ADDITION

Update of descriptive documents in view to introduce a mechanical modification.

As a variation, the equipment shall be fitted with the cable entry type 597 63 00 X , INERIS 02ATEX9008 U.

MARKING

Marking defined in the basic certificate is unchanged.

ROUTINE EXAMINATIONS AND TESTS

The routine verifications and tests stipulated by the basic certificate are unchanged.

(16) - DESCRIPTIVE DOCUMENTS

Documents referred to below, constitute the file describing the modifications of the apparatus and forming the subject of the present addition.

- Drawing n° 439 33 11 X rev 01. of 2002.05.21 signed on 2002.05.21
- Drawing n° 439 97 00 rev 14. of 2002.05.21 signed on 2002.05.21
- Drawing n° 597 63 00 X rev 07. of 2002.05.07 signed on 2002.05.07

This document may only be reproduced in its entirety



ARUN DISTRICT COUNCIL Y/101/19/DOC

(17) - SPECIAL CONDITIONS FOR SAFE USE

The special conditions for safe use defined in the basic certificate are unchanged.

Verneuil-en-Halatte, 2002 12 17

[redacted]

[redacted]

X. LEFEBVRE

Engineer at the Laboratory of Certification of Materials ATEX

Director of the Certifying Body,
By delegation
B. PIQUETTE
Deputy manager of Certification

ATMOSPHERES EXPLOSIVES
ORGANISME NOTIFIÉ
INERIS
NOTIFIED BODY
EXPLOSIVE ATMOSPHERES

This document may only be reproduced in its entirety



ARUN DISTRICT COUNCIL Y/101/19/DOC

# ADDITION

## INERIS 00ATEX0039 X/02

**PUMP TYPE 439 47 00**

**Made by ITT FLYGT AB**

(15) - PURPOSE OF THE ADDITION

Update of descriptive documents in view to introduce mechanical modifications.

PARAMETERS RELATING TO THE SAFETY

The parameters relating to the safety are modified as follow :
. Supply voltage : until 1000 Volts,
. Power according to version : until 5.7 kW.

MARKING

Marking defined in the basic certificate and its addition is unchanged.

ROUTINE EXAMINATIONS AND TESTS

The routine verifications and tests stipulated by the basic certificate and its addition are unchanged.

(16) - DESCRIPTIVE DOCUMENTS

The documents referred to below, constitute the file describing the modifications of the apparatus and forming the subject of the present addition.

- Drawing N° 597 63 00 X rev. 8 of 2003.06.30 signed on 2003.06.30
- Drawing N° 597 63 35 X rev. 0 of 2003.06.03 signed on 2003.06.03
- Drawing N° 597 63 70 X rev. 0 of 2003.06.05 signed on 2003.06.05

(17) - SPECIAL CONDITIONS FOR SAFE USE

The special conditions for safe use defined in the basic certificate and its addition are unchanged.

This document may only be reproduced in its entirety



ARUN DISTRICT COUNCIL Y/101/19/DOC

## (18) - ESSENTIAL REQUIREMENTS OF SAFETY AND HEALTH

The respect of the Essential Health and Safety Requirements is ensured by:

- Conformity to the European standards EN 50 014, EN 50 018, EN 1127-1 and EN 13463-1.
- The whole of the provisions adopted by the manufacturer and described in the descriptive documents.

Verneuil-en-Halatte, 2003 11 07

[redacted]

X. LEFEBVRE

Engineer at the Laboratory of Certification of Materials ATEX

[redacted]

Director of the Certifying Body,
By delegation
B. PIQUETTE
Deputy manager of Certification

ATMOSPHERES EXPLOSIVES
ORGANISME NOTIFIE
INERIS
NOTIFIED BODY
EXPLOSIVE ATMOSPHERES



ARUN DISTRICT COUNCIL Y/101/19/DOC

# ADDITION

## INERIS 00ATEX0039 X/03

**PUMP TYPE 439 47 00**

**Made by ITT FLYGT AB**

(15) - PURPOSE OF THE ADDITION

Update of descriptive documents in view to introduce mechanical modifications.

Possibility of using a new 125°C ± 6°C thermal contact type 84 50 49.

New address : SE-174 87 SUNDBYBERG.

PARAMETERS RELATING TO THE SAFETY

The parameters relating to the safety defined in the basic certificate and its additions are unchanged.

MARKING

Marking defined in the basic certificate and its additions is unchanged.

ROUTINE EXAMINATIONS AND TESTS

The routine verifications and tests stipulated by the basic certificate and its additions are unchanged.

(16) - DESCRIPTIVE DOCUMENTS

The documents referred to below, constitute the file describing the modifications of the apparatus and forming the subject of the present addition.

- Drawing No 439 47 00 X rev. 15 of 2004.03.15 signed on 2004.03.15
- Drawing No 597 63 35 X rev. 1 of 2004.06.17 signed on 2004.06.17

This document may only be reproduced in its entirety



ARUN DISTRICT COUNCIL Y/101/19/DOC

(17) - **SPECIAL CONDITIONS FOR SAFE USE**

The special conditions for safe use defined in the basic certificate and its additions are unchanged.

(18) - **ESSENTIAL REQUIREMENTS OF SAFETY AND HEALTH**

The respect of the Essential Health and Safety Requirements defined in the basic certificate and its additions is unchanged.

Verneuil-en-Halatte, 2004 11 19

[redacted]

X. LEFEBVRE

Engineer at the Laboratory of Certification of ATEX Equipment

[redacted]

Director of the Certifying Body,
By delegation
B. PIQUETTE
Deputy manager of Certification

ATMOSPHERES EXPLOSIVES ORGANISME NOTIFIE INERIS NOTIFIED BODY EXPLOSIVE ATMOSPHERES

This document may only be reproduced in its entirety



ARUN DISTRICT COUNCIL Y/101/19/DOC

# ADDITION

(3) **INERIS 00ATEX0039 X/04**

(4) PUMP TYPE 439 47 00

(5) Made by ITT FLYGT AB

(15) - PURPOSE OF THE ADDITION

Update of descriptive documents.

PARAMETERS RELATING TO THE SAFETY

The parameters relating to the safety defined in the basic certificate and its additions are unchanged.

MARKING

Marking defined in the basic certificate and its additions is unchanged.

ROUTINE EXAMINATIONS AND TESTS

The routine verifications and tests stipulated by the basic certificate and its additions are unchanged.

(16) - DESCRIPTIVE DOCUMENTS

The document referred to below, constitute the file describing the modifications of the apparatus and forming the subject of the present addition.

- Drawing n° 630 68 00 rev. 5 of 2005.01.14. signed on 2005.01.14

This document may only be reproduced in its entirety



ARUN DISTRICT COUNCIL Y/101/19/DOC

**(17) - SPECIAL CONDITIONS FOR SAFE USE**

The special conditions for safe use defined in the basic certificate and its additions are unchanged.

**(18) - ESSENTIAL REQUIREMENTS OF SAFETY AND HEALTH**

The respect of the Essential Health and Safety Requirements defined in the basic certificate and its additions is unchanged.

Verneuil-en-Halatte, 2005 11 29

[redacted]

[redacted]

X. LEFEBVRE

Engineer at the Laboratory of Certification of ATEX Equipment

Director of the Certifying Body,
By delegation
B. PIQUETTE
Deputy manager of Certification



ARUN DISTRICT COUNCIL Y/101/19/DOC

# ADDITION

(3) **INERIS 00ATEX0039X/05**

(4) **PUMP TYPE 439 47 00**

(5) **Made by ITT FLYGT AB**

(15) **PURPOSE OF THE ADDITION**

Mechanical modifications.
Addition of a new type.

**PARAMETERS RELATING TO THE SAFETY**

The parameters relating to the safety mentionned in the basic certificate are unchanged.

**MARKING**

The marking defined in the basic certificate is unchanged.

**ROUTINE EXAMINATIONS AND TESTS**

The routine examinations and tests stipulated by the basic certificate are unchanged.

(16) **DESCRIPTIVE DOCUMENTS**

The descriptive documents quoted hereafter constitute the technical documentation describing the modification of the equipment, subject of this present addition.

- Drawing n°439 47 00 rev.16 dated and signed on 2006.04.26
- Drawing n°657 87 00 rev.2 dated and signed on 2006.07.04

(17) **SPECIAL CONDITIONS FOR SAFE USE**

The special conditions defined in the basic certificate are unchanged.

Only the entire document may be reprinted.





ARUN DISTRICT COUNCIL Y/101/19/DOC

## (18) ESSENTIAL SAFETY AND HEALTH REQUIREMENTS

The respect of the Essential Health and Safety Requirements defined in the basic certificate is unchanged.

Verneuil-en-Halatte, 2006.09.21

[redacted]

X. LEFEBVRE

Project Manager at the ATEX
Equipment Certification Laboratory

[redacted]
By delegation
B. PIQUETTE
Deputy Manager of Certification

# ADDITION

(3) **INERIS 00ATEX0039X/06**

(4) **PUMP TYPE 439 47 00**

(5) **Made by ITT FLYGT AB**

(15) **PURPOSE OF THE ADDITION**

Mechanical modifications.

**PARAMETERS RELATING TO THE SAFETY**

The parameters relating to the safety are unchanged.

**MARKING**

The marking is unchanged.

**ROUTINE EXAMINATIONS AND TESTS**

The routine examinations and tests are unchanged.

(16) **DESCRIPTIVE DOCUMENTS**

The descriptive document quoted hereafter constitutes the technical documentation describing the modification of the equipment, subject of this present addition.

- Drawing n°439 47 00 rev.17 dated and signed on 2007.06.07

(17) **SPECIAL CONDITIONS FOR SAFE USE**

The special conditions are unchanged.



ARUN DISTRICT COUNCIL Y/101/19/DOC

## (18) ESSENTIAL SAFETY AND HEALTH REQUIREMENTS

The respect of the Essential Health and Safety Requirements is unchanged.

Verneuil-en-Halatte, 2007 10 24

[redacted]

X. LEFEBVRE

Project Manager at the ATEX
Equipment Evaluation Laboratory

[redacted]

Director of the Certifying Body,
By delegation
T. HOUEIX
Certification Officer
Certitication Division



ARUN DISTRICT COUNCIL Y/101/19/DOC

# ADDITION

(3) INERIS 00ATEX0039X/07

(4) PUMP TYPE 439 47 00

(5) Made by ITT FLIGT AB

(15) PURPOSE OF THE ADDITION

- Mechanical modifications.
- Application of the standards EN 60079-0 : 2006 and EN 60079-1 : 2004.
- Change of the manufacturer name from ITT FLYGT AB to ITT Water & Wastewater AB.
- Change of the manufacturer adress : S-17487 Sundbyberg.
- Change of the maximum ambient temperature from +90°C to +60°C.

PARAMETERS RELATING TO THE SAFETY

The parameters relating to the safety are unchanged.

MARKING

The marking is modified as follow :

ITT Water & Wastewater AB
S-17487 Sundbyberg
439 47 00
INERIS 00ATEX0039X
(Serial number)
(Year of construction)
Ex II 2 G Ex d IIB T4
Tamb : -20°C to +60°C
WARNINGS :
DO NOT OPEN WHEN AN EXPLOSIVE GAS ATMOSPHERE MAY BE PRESENT
DO NOT OPEN WHEN ENERGIZED
CONNECT THERMAL PROBES

The whole of marking can be carried out in the language of the country of use.

The protection apparatus or system must also carry the marking normally envisaged by the standards of construction which relate to it.



ARUN DISTRICT COUNCIL Y/101/19/DOC

## ROUTINE EXAMINATIONS AND TESTS

The routine examinations and tests are unchanged.

## (16) DESCRIPTIVE DOCUMENTS

The descriptive documents quoted hereafter constitute the technical documentation describing the modifications of the equipment, subject of this present addition.

- Descriptive note VPSA09002EDH — dated and signed on 2009.03.03
- Drawing 439 33 11 X rev.02 — dated and signed on 2008.04.30
- Drawing 439 47 00 rev.18 — dated and signed on 2008.07.08
- Drawing 630 68 00 rev.07 — dated and signed on 2008.08.18

## (17) SPECIAL CONDITIONS FOR SAFE USE

The special conditions for safe use are unchanged.

## (18) ESSENTIAL SAFETY AND HEALTH REQUIREMENTS

The respect of the Essential Health and Safety Requirements is assured by :

- Conformity to the standards indicated in the paragraph 15 and the standard EN 1127-1 : 1997.
- The whole of the provisions adopted by the manufacturer and described in the descriptive documents.

Verneuil-en-Halatte, 2009 03 27

Dominique CHARPENTIER
Directeur Adjoint
[redacted]

ATMOSPHERES EXPLOSIVES ORGANISME NOTIFIE INERIS NOTIFIED BODY EXPLOSIVE ATMOSPHERES

Director of the Certifying Body,
By delegation
T. HOUEIX
Certification Officer
Certification Division



ARUN DISTRICT COUNCIL Y/101/19/DOC

# ADDITION

(3) INERIS 00ATEX0039X/08

(4) PUMP TYPE 439 47 00

(5) Made by ITT WATER & WASTEWATER AB

## (15) PURPOSE OF THE ADDITION

- Mechanical modifications.
- Introduction of the new product 8212.090.
- Application of the standard EN 1127-1 : 2007.

### PARAMETERS RELATING TO THE SAFETY

The parameters relating to the safety are unchanged.

### MARKING

The marking is unchanged.

### ROUTINE EXAMINATIONS AND TESTS

None.

## (16) DESCRIPTIVE DOCUMENTS

The descriptive documents quoted hereafter constitute the technical documentation describing the modifications of the equipment, subject of this present addition.

- Descriptive note VPSA10008EDH dated and signed on 2010.03.15
- Drawing n°439 47 00 rev.19 dated and signed on 2009.10.02

## (17) SPECIAL CONDITIONS FOR SAFE USE

The special conditions for safe use are unchanged.



ARUN DISTRICT COUNCIL Y/101/19/DOC

## (18) ESSENTIAL SAFETY AND HEALTH REQUIREMENTS

The respect of the Essential Health and Safety Requirements is assured by :

- Conformity to the standards EN 60079-0 : 2006, EN 60079-1 : 2004 and EN 1127-1 : 2007.
- The whole of the provisions adopted by the manufacturer and described in the descriptive documents.

Verneuil-en-Halatte, 2010 05 10

[redacted]

Dire[redacted]
By delegation
T. HOUEIX
Certification Officer
Certification Division

ATMOSPHERES EXPLOSIVES ORGANISME NOTIFIE INERIS NOTIFIED BODY EXPLOSIVE ATMOSPHERES



ARUN DISTRICT COUNCIL Y/101/19/DOC

# ADDITION

(3) INERIS 00ATEX0039X/09

(4) PUMP TYPE 439 47 00

(5) Made by ITT WATER & WASTEWATER AB

(15) PURPOSE OF THE ADDITION

- Updating of the manufacturer's documents
- Modification of hydraulic parts.

PARAMETERS RELATING TO THE SAFETY

The parameters relating to the safety are unchanged.

MARKING

The marking is unchanged.

ROUTINE EXAMINATIONS AND TESTS

None.

(16) DESCRIPTIVE DOCUMENTS

The descriptive documents quoted hereafter constitute the technical documentation describing the modifications of the equipment, subject of this present addition.

- Change description for EN-approved products dated on 2010.10.15
- CRITICALS PARTS dated on 2010.10.15
- Drawing 657 87 00 rev 04 dated and signed on 2010.10.15

(17) SPECIAL CONDITIONS FOR SAFE USE

The special conditions for safe use are unchanged.



ARUN DISTRICT COUNCIL Y/101/19/DOC

## (18) ESSENTIAL SAFETY AND HEALTH REQUIREMENTS

The respect of the Essential Health and Safety Requirements is unchanged.

Verneuil-en-Halatte, 2011.01.20

[redacted]

Director of the Certifying Body,
By delegation
T. HOUEIX
Certification Officer
Certification Division

ATMOSPHERES EXPLOSIVES ORGANISME NOTIFIE INERIS NOTIFIED BODY EXPLOSIVE ATMOSPHERES



ARUN DISTRICT COUNCIL Y/101/19/DOC

# ADDITION

(3) INERIS 00ATEX0039X/10

(4) PUMP TYPE 439 47 00

(5) Made by ITT WATER & WASTEWATER AB

(15) PURPOSE OF THE ADDITION

- Addition of a new pump version: 3102.190.

PARAMETERS RELATING TO THE SAFETY

The parameters relating to the safety are unchanged.

MARKING

The marking is unchanged.

ROUTINE EXAMINATIONS AND TESTS

None.

(16) DESCRIPTIVE DOCUMENTS

The descriptive documents quoted hereafter constitute the technical documentation describing the modifications of the equipment, subject of this present addition.

- Change description for EN-approved products — dated on 2011.04.07
- Revision report - Approved products — dated on 2011.04.07
- Drawing 657 87 00 rev 05 — dated and signed on 2011.04.05
- Drawing 439 47 00 rev 20 — dated and signed on 2011.04.05

(17) SPECIAL CONDITIONS FOR SAFE USE

The special conditions for safe use are unchanged.



ARUN DISTRICT COUNCIL Y/101/19/DOC

(18) ESSENTIAL SAFETY AND HEALTH REQUIREMENTS

The respect of the Essential Health and Safety Requirements is unchanged.

Verneuil-en-Halatte, 2011.05.30

[redacted]

Director of the Certifying Body,
By delegation
T. HOUEIX
Certification Officer
Certification Division

ATMOSPHERES EXPLOSIVES ORGANISME NOTIFIE INERIS NOTIFIED BODY EXPLOSIVE ATMOSPHERES



ARUN DISTRICT COUNCIL Y/101/19/DOC

Proprietary Notice:
This drawing and this document and the subject matter disclosed herein are the property of Xylem Water Solutions AB and are not to be disclosed, disseminated or used in any way without our express written permission.

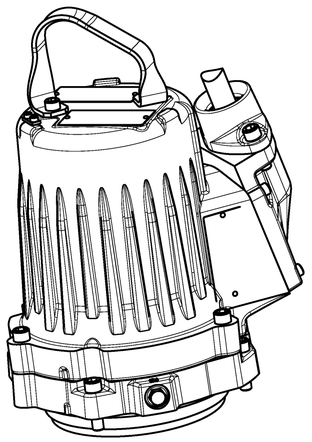


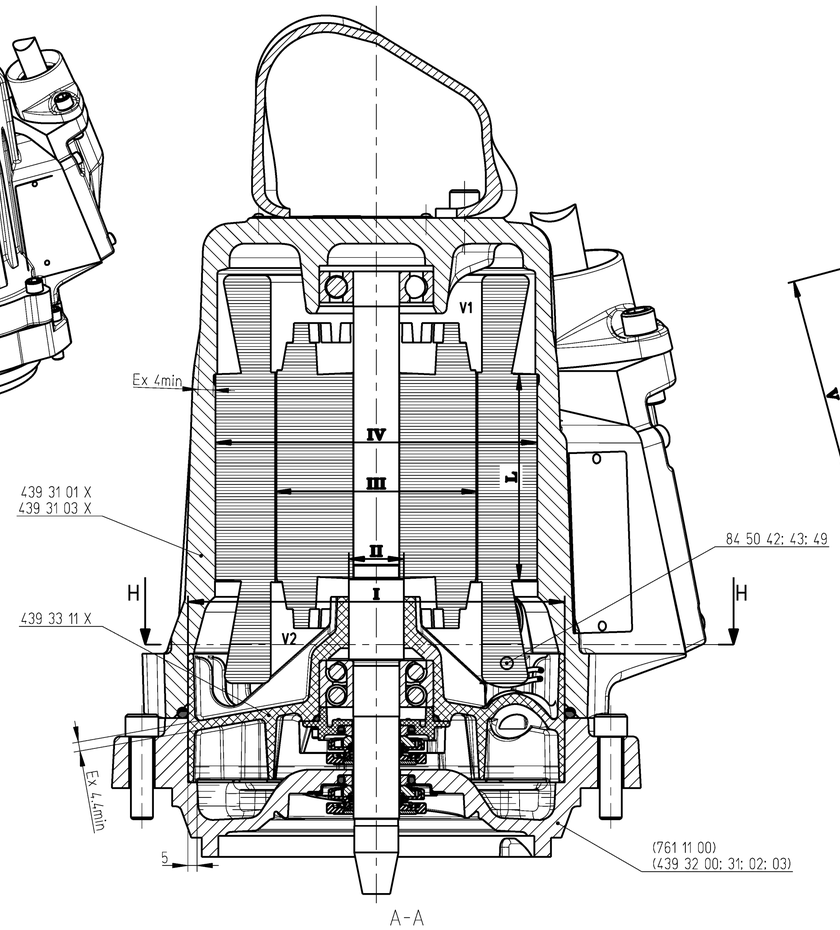


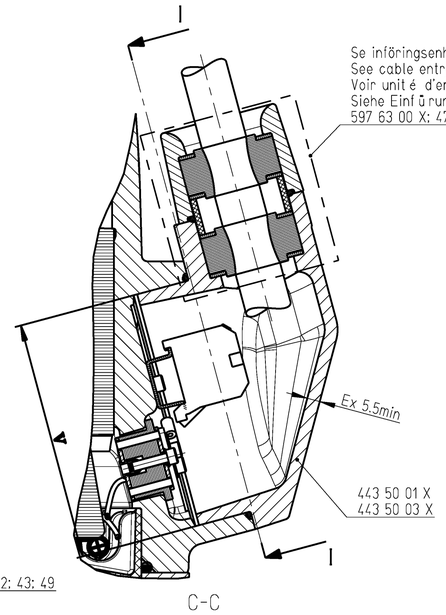


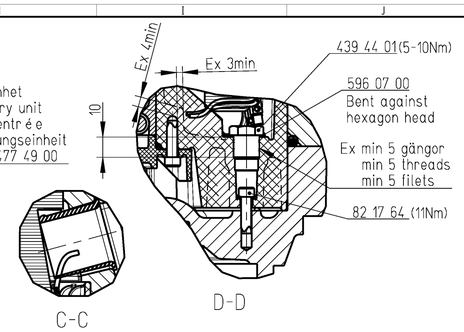


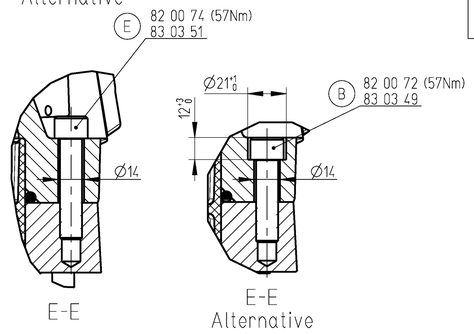


| Stator | L mm | 50 Hz 3 phase | 60 Hz 3 phase | 50 Hz 1 phase | 60 Hz 1 phase | Volume ($dm^3$) |
|---|---|---|---|---|---|---|
| 18-10-2(G) | 97 | --- | --- | --- | 2-pole 5.0 kW 3455 rpm | V1=0.95 V2=2.56 V1+V2=3.51 |
| 18-10-2(A) | 97 | 2-pole 5.6 kW 2855 rpm | 2-pole 6.2 kW 3455 rpm | --- | --- | V1=0.95 V2=2.56 V1+V2=3.51 |
| 18-10-2AS | 97 | 2-pole 6.2 kW 3000 rpm | 2-pole 7.1 kW 3600 rpm | --- | --- | V1=1.03 V2=2.64 V1+V2=3.67 |
| 18-11-4 | 112 | 4-pole 3.8 kW 1435 rpm | 4-pole 4.6 kW 1720 rpm | --- | 4-pole 3.6 kW 1730 rpm | V1=0.95 V2=2.23 V1+V2=3.18 |
| 18-11-4AS | 112 | 4-pole 4.4 kW 1500 rpm | 4-pole 5.2 kW 1800 rpm | --- | --- | V1=1.03 V2=2.31 V1+V2=3.34 |

| Joint | With of joint | Diameter (mm) | Gap of joint min (mm) | Gap of joint max (mm) |
|---|---|---|---|---|
| I | >= 25 | 205 H8<br>205 f8 | 0.050 | 0.194 |
| II | >= 25 | 30 H7<br>$30^{-0.255}_{-0.274}$ | 0.255<br>k>=0.075 | 0.295<br>m<=0.2 |
| III | 95 | 94.2±0.05<br>95±0.05 | 0.70 | 0.90 |
| | 95 (18-10-2AS) | $93.4^{+0.45}_{-0.05}$ *)<br>95±0.05 | 1.1 | 1.7 |
| | 110 | 109.2±0.05<br>$110^{+0.1}_{0}$ | 0.75 | 0.95 |
| | 110 (18-11-4AS) | $108.4^{+0.45}_{-0.05}$ *)<br>$110^{+0.1}_{0}$ | 1.15 | 1.75 |
| IV | 91 2-pole<br>106 4-pole | 175 P7<br>$175^{+0.078}_{-0.022}$ | Shrink fit | |
| V | >= 25 | 130 f8<br>130 H8 | 0.043 | 0.169 |

*) Including resin thickness, t=0.2 max

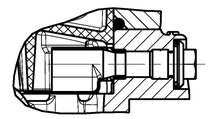


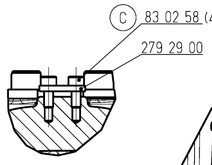


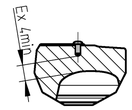


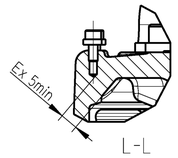


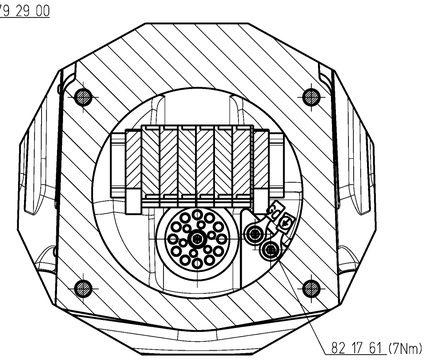


| Material | | |
|---|---|---|
| 443 50 03 X<br>443 50 01 X<br>439 31 03 X<br>439 31 01 X<br>439 32 00; 01; 02; 03<br>761 11 00 | Cast iron | ISO 185 Grade 250 tab 1 |
| 439 33 11 X | Aluminum | ASTM B85 A413.0 |
| Shaft | Stainless steel | ISO 683/13:1986 4<br>ISO 683/13:1986 9<br>M0344.2324.02<br>X8CrNiMoN27 5 2 Wnr 1.4460<br>Z5 CND 27-05 Az<br>BS 970 431S29<br>DIN 17440 X20 CrNi 17 2<br>M0344.2321.03<br>NF A 35Z 15CN 16.02 |
| Screws | C | ISO 683/13 20a |
| | A: B: D: E | ISO 683/13 11<br>ISO 683/13 20a |

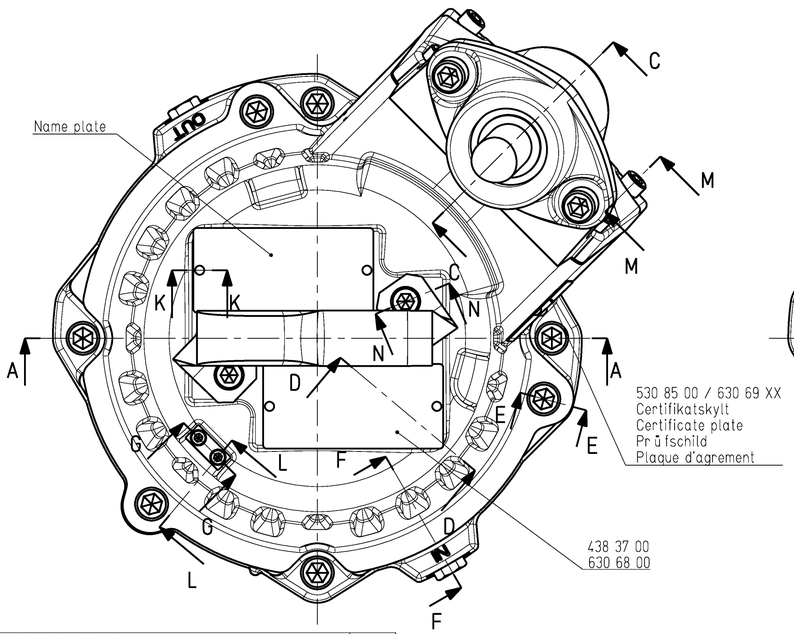


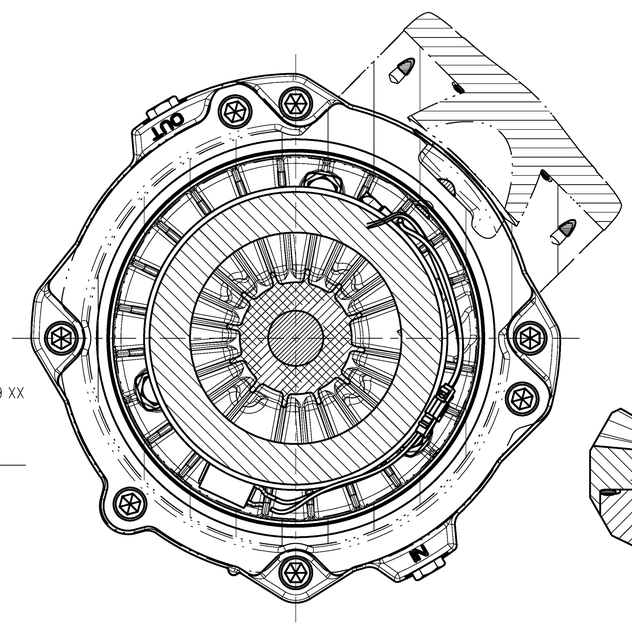


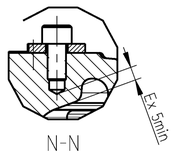


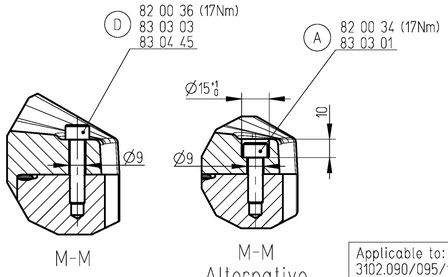


ATEX approval drawing: 657 87 00

Ex see internal standard A 3281.10/1.1.1

This drawing may not be altered without permission of authorities listed below.
EN IECEx

Applicable to:
3102.090/095/190/810/830/890/910, 5520.090, 8212.090

M class: 5399

| Rev. No: | Revision | ECN No: |
|---|---|---|
| 21 | Modelled in Pro/E: 3102.810/830/910; Stator: 18-10-2AS..., 18-11-4AS...; Joint III: 95±0.05, 0.70, 0.90, $110^{+0.1}_{0}$, 0.75, 0.95 - ~~95±0.03, 0.72, 0.88, 110±0.03, 0.72, 0.88~~; 95 (18-10-2AS)..., 110 (18-11-4AS)... | 00120932 |

Pro/ENGINEER Drawing Format A1 Sheet 1 of 1 . format.prt "A1" "A1"
All dimensions are given in millimeters unless otherwise stated

| | | | | | | | |
|---|---|---|---|---|---|---|---|
| Project | File | Filename | Version created | Release level | Rev | Var |
| | Drawing | C36/120 | 2010-09-08 15:43:40 | released | 0 | 5 |
| | Design | 3102.71 | 2010-12-20 16:12:05 | released | 0 | 5 |

xylem

Denomination: Approval drawing

Sheet 1 of 1

released

Drawing No: 439 47 00

Rev: 21

**Appendix E**
**Pump Station Drawings**



ARUN DISTRICT COUNCIL Y/101/19/DOC

**M&E Drawings**



ARUN DISTRICT COUNCIL Y/101/19/DOC

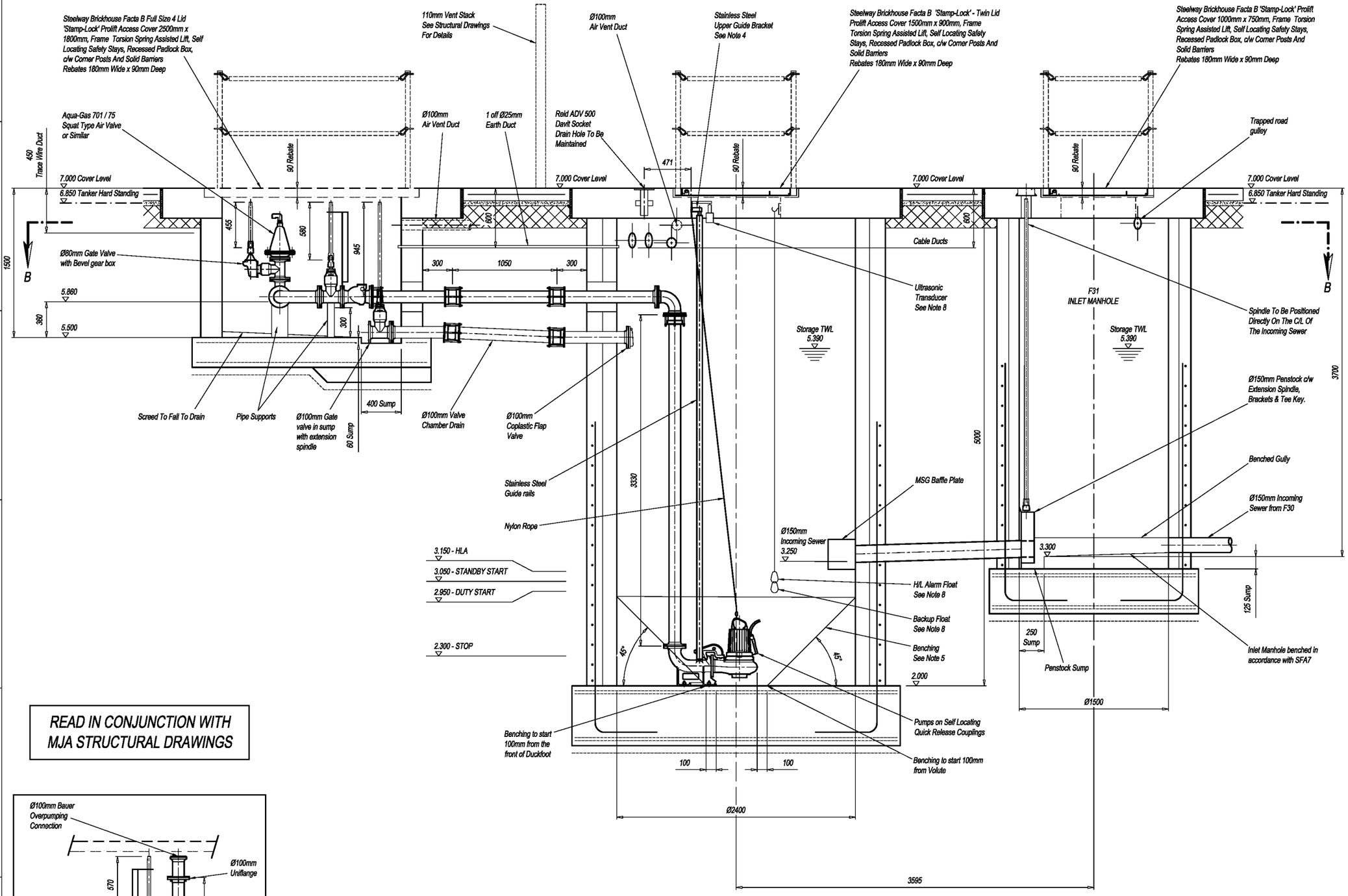


READ IN CONJUNCTION WITH MJA STRUCTURAL DRAWINGS

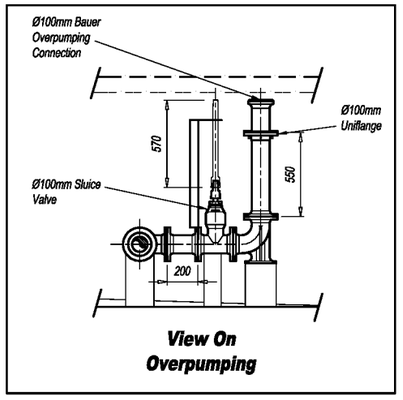


**VIEW ON SECTION A - A**

| OPERATING LEVELS | |
|---|---|
| MAXIMUM STORAGE LEVEL | 5.390 |
| LOWEST INLET | 3.250 |
| HIGH LEVEL ALARM | 3.150 |
| STANDBY PUMP START | 3.050 |
| DUTY PUMP START | 2.950 |
| PUMP STOP | 2.300 |
| WET WELL BASE | 2.000 |

**NOTES**

1. DO NOT SCALE.
2. UNLESS OTHERWISE STATED ALL DIMENSIONS ARE IN MILLIMETRES AND ALL INVERTS IN METRES AOD.
3. ALL CIVIL WORKS IS THE RESPONSIBILITY OF THE DEVELOPER OR CONTRACTOR INCLUDING FIXING OF STEELWORK SUCH AS ACCESS COVERS AND PENSTOCKS ETC. INSTALLATION OF CABLE DUCTS, BENCHING AND MAKING GOOD AROUND PIPES AFTER INSTALLATION.
4. REINFORCING BARS ARE TO BE A MINIMUM OF 75MM BELOW THE SURFACE. ANY STRUCTURAL DETAILING / CIVIL WORKS SHOWN SHOWN ON THIS DRAWING ARE ILLUSTRATIVE ONLY UNLESS OTHERWISE STATED AND SHOULD NOT BE USED FOR CONSTRUCTION.
5. BENCHING IS TO BE FORMED AFTER PUMP INSTALLATION AND TO BE IN ACCORDANCE WITH THE APPLICABLE SEWERS FOR ADOPTION AND ADOPTING AUTHORITY SPECIFICATION.
6. UNLESS OTHERWISE STATED, ALL DUCTS ARE TO BE Ø100MM AND BE COMPLETE WITH DRAW ROPES. SERVICE DUCTS TO BE TO THE UTILITY SUPPLIERS SPECIFICATION.
7. DUCT ROUTES ARE SHOWN DIAGRAMMATICALLY ONLY. ALL DUCTS LAID IN THE MOST DIRECT ROUTE TO SUIT THE SERVICE BEING CARRIED AVOIDING ANY ACUTE CHANGES OF DIRECTION.
8. LEVEL CONTROL POSITIONS ARE SHOWN DIAGRAMMATICALLY ONLY. THEY WILL BE POSITIONED AWAY FROM OBSTRUCTIONS AND BE READILY ADJUSTABLE AFTER INSTALLATION.

| STATION INFORMATION | |
|---|---|
| PUMP TYPE | NP 3102 MT |
| IMPELLER | 462 |
| MOTOR RATING | 3.1 k.W. |
| FULL LOAD CURRENT | 6.8 A FLC |
| ZONE RATING | EXP |
| DUTY FLOW | 9.40 l/s |
| HEAD GENERATED | 9.31m |
| LEVEL CONTROLS | SIEMENS HYDRORANGER 200 C/W HIGH LEVEL ALARM AND BACK UP FLOAT SWITCHES |
| PIPE / VALVE SIZE | Ø100mm |
| **FINAL DISCHARGE** | |
| *INTERNAL DIAMETER* | Ø100mm |
| *MATERIAL* | DUCTILE IRON |
| *TERMINATION* | PLAIN ENDED |
| *PIPE OD* | Ø118mm |
| *FLANGE DATA* | N/A |
| *RISING MAIN* | 125OD PE100 SDR11 101.3mm BORE () |
| *RISING MAIN COUPLER* | BY OTHERS |

| REV | DATE | DESCRIPTION | DR'n | CHK'd | APR'l |
|---|---|---|---|---|---|
| B | 21/05/19 | Head generated amended. | E.W. | - | P.W. |
| A | 08/05/19 | Amended in line with structural drawings. | E.W. | - | P.W. |

# FOR APPROVAL


PDAS
Pump Design and Services Ltd
UNIT 7, STANHOPE GATE, STANHOPE ROAD, CAMBERLEY, SURREY, GU15 3DW
OFFICE TEL No. (01483) 930520
WEBSITE WWW.PDASLTD.CO.UK


PROJECT: BURNDELL ROAD YAPTON

TITLE: FOUL WATER PUMP STATION ELEVATION VIEW

CLIENT: BOVIS HOMES SOUTHERN HOME COUNTIES

| | | | |
|---|---|---|---|
| SCALE AT A1 | 1:20 | SCALE AT A3 | 1:40 |
| QUOTE NUMBER | Q10276 | APR'l P.W. | DATE 26-03-2019 |
| PROJECT REF. | PR10869 | CHK'd P.W. | DATE 26-03-2019 |
| DRAWING NUMBER | PR10869 - 001 | DR'n E.W. | DATE 26-03-2019 |


DRAWING PROVIDED COURTESY OF PDAS LTD. UPON HANDOVER ALL DOCUMENT CONFIDENTIALITY AT CLIENTS DISCRETION
ARUN DISTRICT COUNCIL X:\01419\DOC

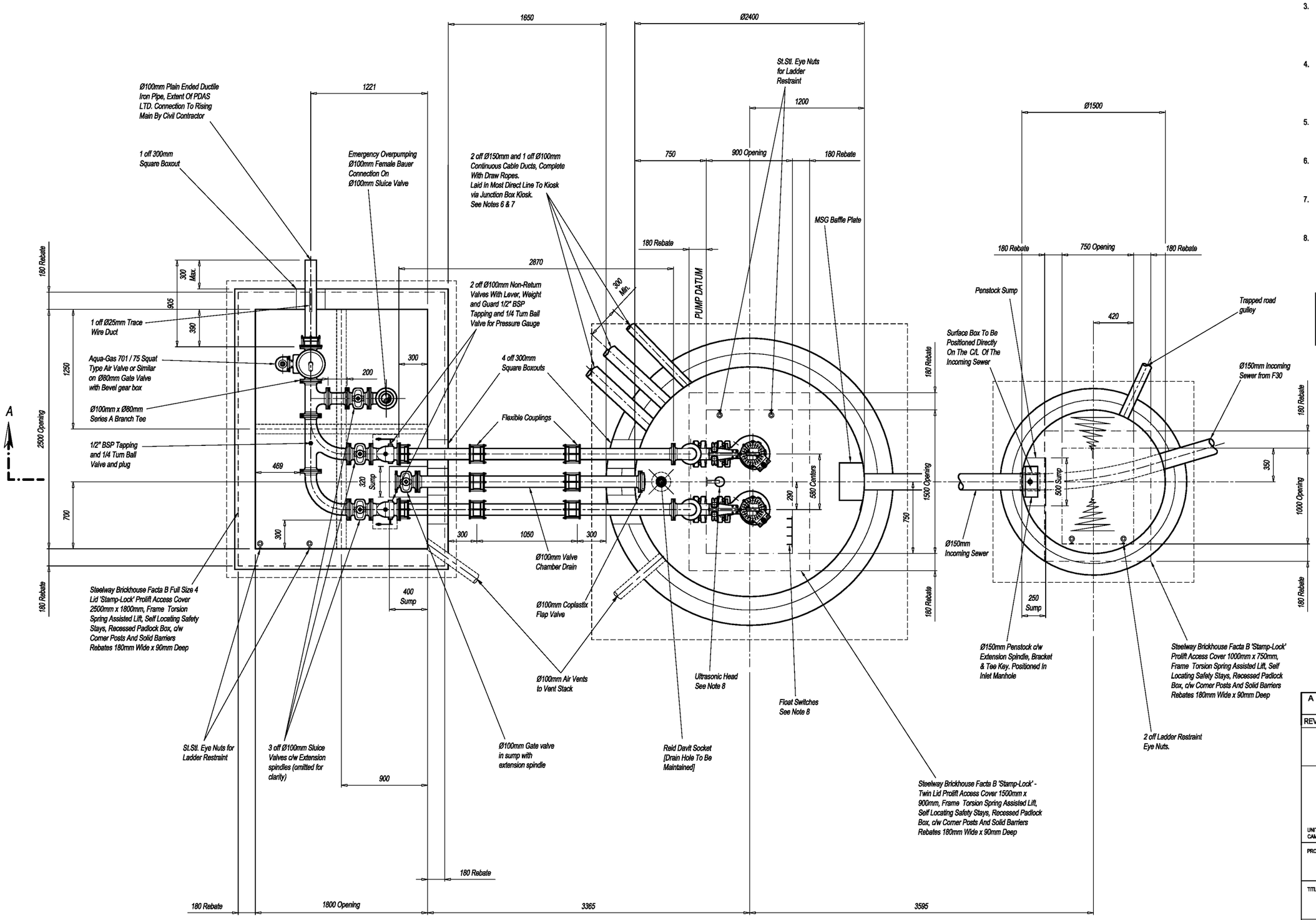


**VIEW ON SECTION B - B**

**NOTES**

1. DO NOT SCALE.
2. UNLESS OTHERWISE STATED ALL DIMENSIONS ARE IN MILLIMETRES AND ALL INVERTS IN METRES AOD.
3. ALL CIVIL WORKS IS THE RESPONSIBILITY OF THE DEVELOPER OR CONTRACTOR INCLUDING FIXING OF STEELWORK SUCH AS ACCESS COVERS AND PENSTOCKS ETC. INSTALLATION OF CABLE DUCTS, BENCHING AND MAKING GOOD AROUND PIPES AFTER INSTALLATION.
4. REINFORCING BARS ARE TO BE A MINIMUM OF 75MM BELOW THE SURFACE. ANY STRUCTURAL DETAILING / CIVIL WORKS SHOWN SHOWN ON THIS DRAWING ARE ILLUSTRATIVE ONLY UNLESS OTHERWISE STATED AND SHOULD NOT BE USED FOR CONSTRUCTION.
5. BENCHING IS TO BE FORMED AFTER PUMP INSTALLATION AND TO BE IN ACCORDANCE WITH THE APPLICABLE SEWERS FOR ADOPTION AND ADOPTING AUTHORITY SPECIFICATION.
6. UNLESS OTHERWISE STATED, ALL DUCTS ARE TO BE Ø100MM AND BE COMPLETE WITH DRAW ROPES. SERVICE DUCTS TO BE TO THE UTILITY SUPPLIERS SPECIFICATION.
7. DUCT ROUTES ARE SHOWN DIAGRAMMATICALLY ONLY. ALL DUCTS LAID IN THE MOST DIRECT ROUTE TO SUIT THE SERVICE BEING CARRIED AVOIDING ANY ACUTE CHANGES OF DIRECTION.
8. LEVEL CONTROL POSITIONS ARE SHOWN DIAGRAMMATICALLY ONLY. THEY WILL BE POSITIONED AWAY FROM OBSTRUCTIONS AND BE READILY ADJUSTABLE AFTER INSTALLATION.

*READ IN CONJUNCTION WITH MJA STRUCTURAL DRAWINGS*

| REV | DATE | DESCRIPTION | DR'n | CHK'd | APR'l |
|---|---|---|---|---|---|
| A | 08/05/19 | Amended in line with structural drawings. | E.W. | - | P.W. |

# FOR APPROVAL

PDAS
Pump Design and Services Ltd
UNIT 7, STANHOPE GATE, STANHOPE ROAD, CAMBERLEY, SURREY, GU15 3DW
OFFICE TEL No. (01483) 930520
WEBSITE WWW.PDASLTD.CO.UK

| | | | |
|---|---|---|---|
| PROJECT | BURNDELL ROAD YAPTON | | |
| TITLE | FOUL WATER PUMP STATION PLAN VIEW | | |
| CLIENT | BOVIS HOMES SOUTHERN HOME COUNTIES | | |
| SCALE AT A1 1:20 | | SCALE AT A3 1:40 | |
| QUOTE NUMBER Q10276 | APR'l P.W. | DATE 26-03-2019 | |
| PROJECT REF. PR10869 | CHK'd P.W. | DATE 26-03-2019 | |
| DRAWING NUMBER PR10869 - 002 | DR'n E.W. | DATE 26-03-2019 | |

DRAWING PROVIDED COURTESY OF PDAS LTD. UPON HANDOVER ALL DOCUMENT CONFIDENTIALITY AT CLIENTS DISCRETION

ARUN DISTRICT COUNCIL V4.01.19.DOC

## MCC KIOSK PLINTH DETAIL

(KIOSK 1750 High)

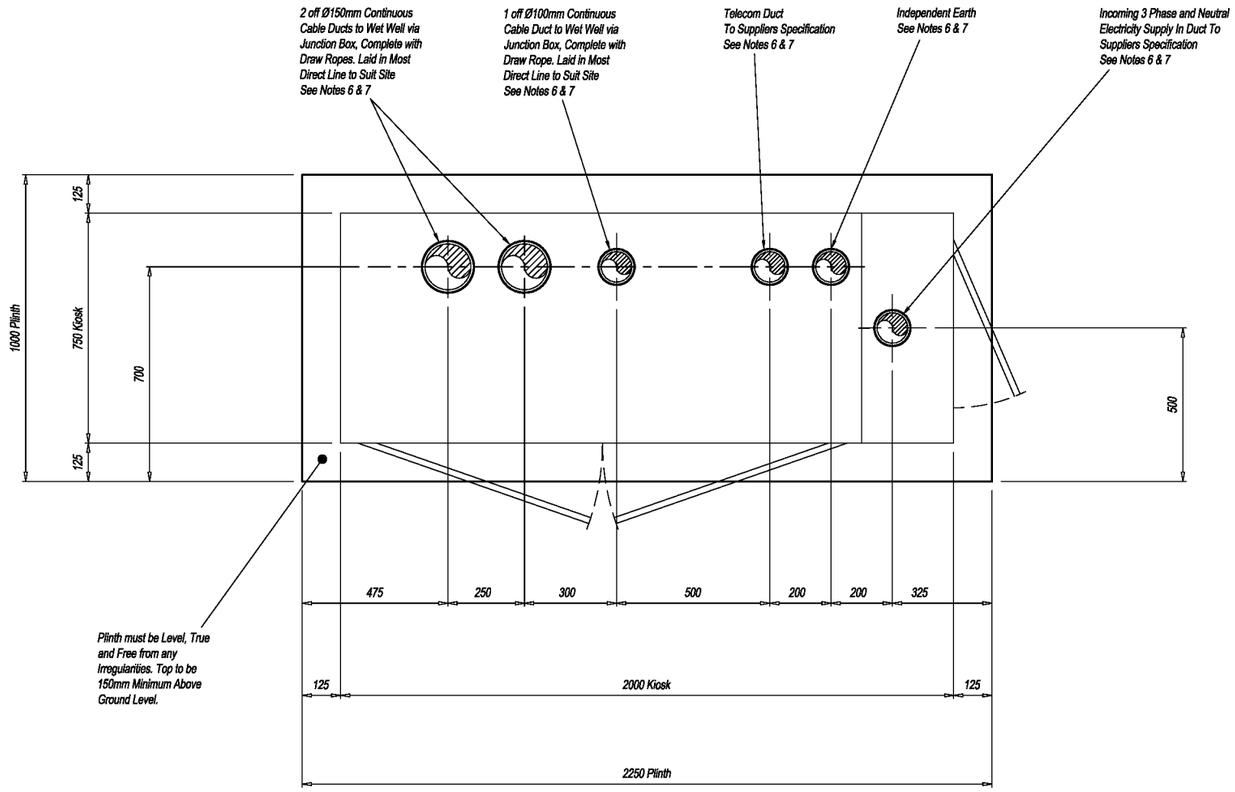


Tolerance on Duct Centre Positions ±10mm

**NOTES**

1. DO NOT SCALE.
2. UNLESS OTHERWISE STATED ALL DIMENSIONS ARE IN MILLIMETRES AND ALL INVERTS IN METRES AOD.
3. ALL CIVIL WORKS IS THE RESPONSIBILITY OF THE DEVELOPER OR CONTRACTOR INCLUDING FIXING OF STEELWORK SUCH AS ACCESS COVERS AND PENSTOCKS ETC. INSTALLATION OF CABLE DUCTS, BENCHING AND MAKING GOOD AROUND PIPES AFTER INSTALLATION.
4. REINFORCING BARS ARE TO BE A MINIMUM OF 75MM BELOW THE SURFACE. ANY STRUCTURAL DETAILING / CIVIL WORKS SHOWN SHOWN ON THIS DRAWING ARE ILLUSTRATIVE ONLY UNLESS OTHERWISE STATED AND SHOULD NOT BE USED FOR CONSTRUCTION.
5. BENCHING IS TO BE FORMED AFTER PUMP INSTALLATION AND TO BE IN ACCORDANCE WITH THE APPLICABLE SEWERS FOR ADOPTION AND ADOPTING AUTHORITY SPECIFICATION.
6. UNLESS OTHERWISE STATED, ALL DUCTS ARE TO BE Ø100MM AND BE COMPLETE WITH DRAW ROPES. SERVICE DUCTS TO BE TO THE UTILITY SUPPLIERS SPECIFICATION.
7. DUCT ROUTES ARE SHOWN DIAGRAMMATICALLY ONLY. ALL DUCTS LAID IN THE MOST DIRECT ROUTE TO SUIT THE SERVICE BEING CARRIED AVOIDING ANY ACUTE CHANGES OF DIRECTION.
8. LEVEL CONTROL POSITIONS ARE SHOWN DIAGRAMMATICALLY ONLY. THEY WILL BE POSITIONED AWAY FROM OBSTRUCTIONS AND BE READILY ADJUSTABLE AFTER INSTALLATION.

*READ IN CONJUNCTION WITH MJA STRUCTURAL DRAWINGS*

## JUNCTION BOX KIOSK PLINTH DETAIL

Kiosk Dimensions
1250mm High x 750mm Wide x 400mm Deep

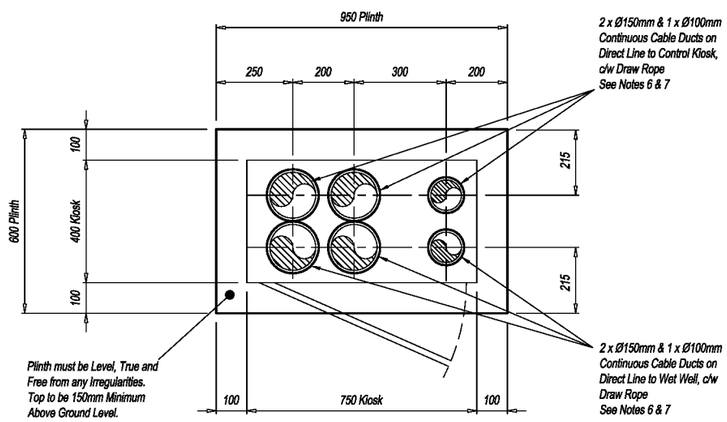


Tolerance on Duct Centre Positions ±10mm

| REV | DATE | DESCRIPTION | DR'n | CHK'd | APR'l |
|---|---|---|---|---|---|
| A | 08/05/19 | Note added. | E.W. | - | P.W. |

# FOR APPROVAL

PDAS
Pump Design and Services Ltd

UNIT 7, STANHOPE GATE, STANHOPE ROAD, CAMBERLEY, SURREY, GU15 3DW
OFFICE TEL No. (01483) 930520
WEBSITE WWW.PDASLTD.CO.UK

| | | | |
|---|---|---|---|
| PROJECT | BURNDELL ROAD YAPTON | | |
| TITLE | FOUL WATER PUMP STATION KIOSK AND PLINTH DETAIL | | |
| CLIENT | BOVIS HOMES SOUTHERN HOME COUNTIES | | |
| SCALE AT A1 1:10 | | SCALE AT A3 1:20 | |
| QUOTE NUMBER Q10276 | APR'l P.W. | DATE 26-03-2019 | |
| PROJECT REF. PR10869 | CHK'd P.W. | DATE 26-03-2019 | |
| DRAWING NUMBER PR10869 - 003 | DR'n E.W. | DATE 26-03-2019 | |

DRAWING PROVIDED COURTESY OF PDAS LTD. UPON HANDOVER ALL DOCUMENT CONFIDENTIALITY AT CLIENTS DISCRETION

ARUN DISTRICT COUNCIL V:\01119\DOC

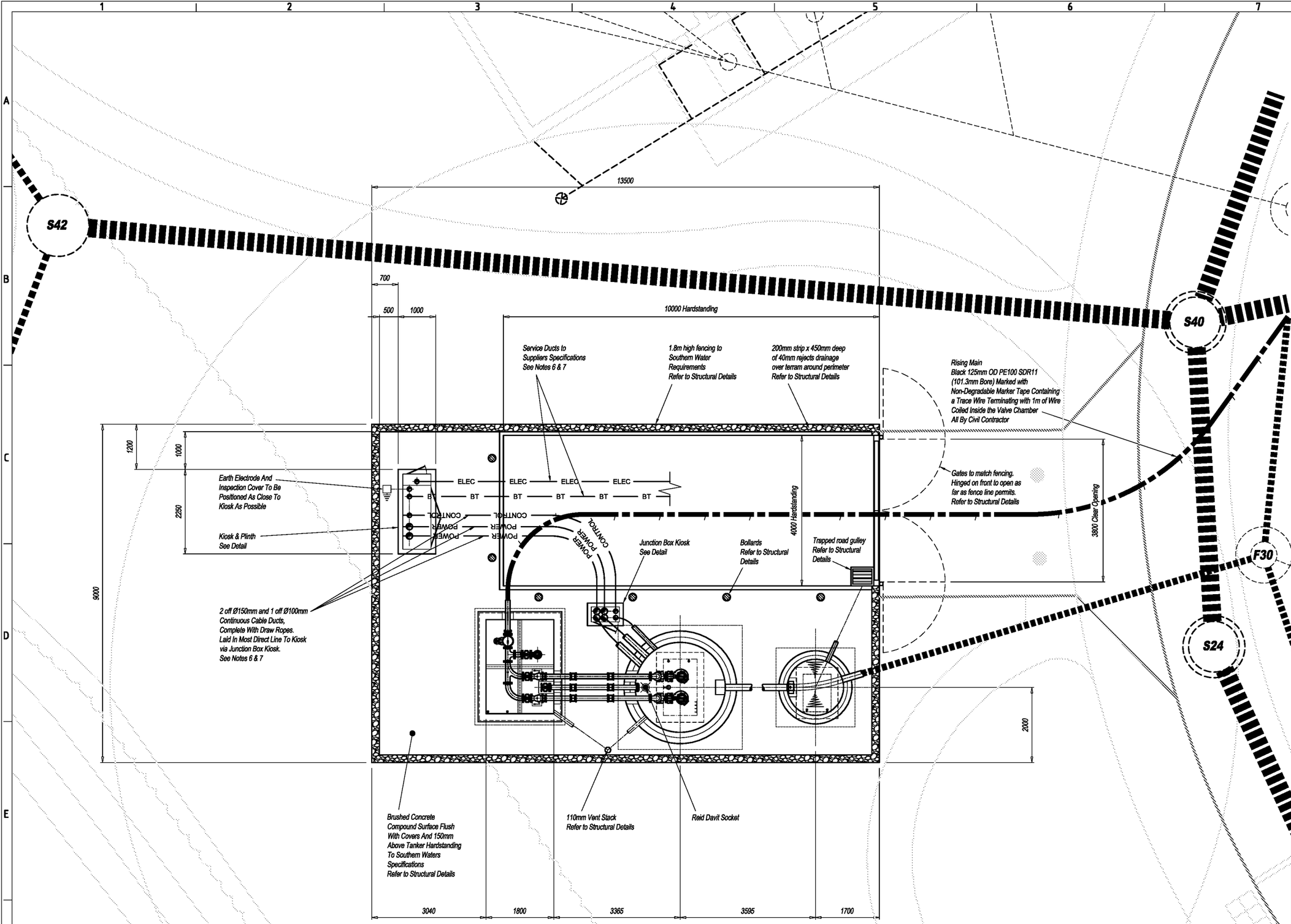


**NOTES**

1. DO NOT SCALE.
2. UNLESS OTHERWISE STATED ALL DIMENSIONS ARE IN MILLIMETRES AND ALL INVERTS IN METRES AOD.
3. ALL CIVIL WORKS IS THE RESPONSIBILITY OF THE DEVELOPER OR CONTRACTOR INCLUDING FIXING OF STEELWORK SUCH AS ACCESS COVERS AND PENSTOCKS ETC. INSTALLATION OF CABLE DUCTS, BENCHING AND MAKING GOOD AROUND PIPES AFTER INSTALLATION.
4. REINFORCING BARS ARE TO BE A MINIMUM OF 75MM BELOW THE SURFACE. ANY STRUCTURAL DETAILING / CIVIL WORKS SHOWN SHOWN ON THIS DRAWING ARE ILLUSTRATIVE ONLY UNLESS OTHERWISE STATED AND SHOULD NOT BE USED FOR CONSTRUCTION.
5. BENCHING IS TO BE FORMED AFTER PUMP INSTALLATION AND TO BE IN ACCORDANCE WITH THE APPLICABLE SEWERS FOR ADOPTION AND ADOPTING AUTHORITY SPECIFICATION.
6. UNLESS OTHERWISE STATED, ALL DUCTS ARE TO BE Ø100MM AND BE COMPLETE WITH DRAW ROPES. SERVICE DUCTS TO BE TO THE UTILITY SUPPLIERS SPECIFICATION.
7. DUCT ROUTES ARE SHOWN DIAGRAMMATICALLY ONLY. ALL DUCTS LAID IN THE MOST DIRECT ROUTE TO SUIT THE SERVICE BEING CARRIED AVOIDING ANY ACUTE CHANGES OF DIRECTION.
8. LEVEL CONTROL POSITIONS ARE SHOWN DIAGRAMMATICALLY ONLY. THEY WILL BE POSITIONED AWAY FROM OBSTRUCTIONS AND BE READILY ADJUSTABLE AFTER INSTALLATION.

**READ IN CONJUNCTION WITH MJA STRUCTURAL DRAWINGS**

| REV | DATE | DESCRIPTION | DR'n | CHK'd | APR'l |
|---|---|---|---|---|---|
| A | 08/05/19 | Amended in line with structural drawings. | E.W. | - | P.W. |

# FOR APPROVAL


PDAS
Pump Design and Services Ltd
UNIT 7, STANHOPE GATE, STANHOPE ROAD, CAMBERLEY, SURREY, GU15 3DW
OFFICE TEL No. (01483) 930520
WEBSITE WWW.PDASLTD.CO.UK


| | | | |
|---|---|---|---|
| PROJECT | BURNDELL ROAD YAPTON | | |
| TITLE | FOUL WATER PUMP STATION SITE PLAN | | |
| CLIENT | BOVIS HOMES SOUTHERN HOME COUNTIES | | |
| SCALE AT A1 | 1:50 | SCALE AT A3 | 1:100 |
| QUOTE NUMBER | Q10276 | APR'l P.W. | DATE 26-03-2019 |
| PROJECT REF. | PR10869 | CHK'd P.W. | DATE 26-03-2019 |
| DRAWING NUMBER | PR10869 - 004 | DR'n E.W. | DATE 26-03-2019 |


DRAWING PROVIDED COURTESY OF PDAS LTD. UPON HANDOVER ALL DOCUMENT CONFIDENTIALITY AT CLIENTS DISCRETION
ARUN DISTRICT COUNCIL V:101/19/DOC

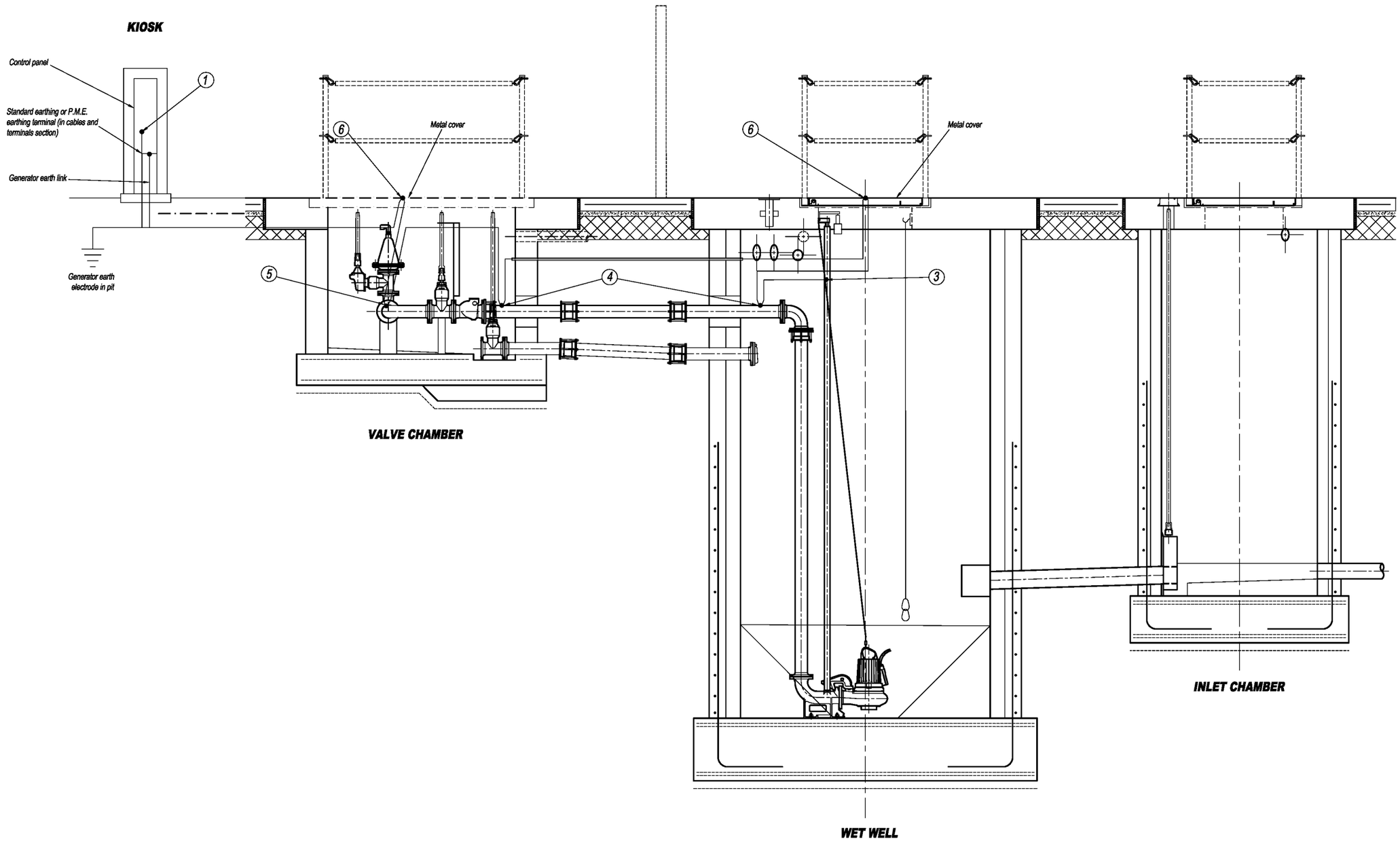


**NOTES**

1. DO NOT SCALE.
2. UNLESS OTHERWISE STATED ALL DIMENSIONS ARE IN MILLIMETRES AND ALL INVERTS IN METRES AOD.
3. ALL CIVIL WORKS IS THE RESPONSIBILITY OF THE DEVELOPER OR CONTRACTOR INCLUDING FIXING OF STEELWORK SUCH AS ACCESS COVERS AND PENSTOCKS ETC. INSTALLATION OF CABLE DUCTS, BENCHING AND MAKING GOOD AROUND PIPES AFTER INSTALLATION.
4. REINFORCING BARS ARE TO BE A MINIMUM OF 75MM BELOW THE SURFACE. ANY STRUCTURAL DETAILING / CIVIL WORKS SHOWN SHOWN ON THIS DRAWING ARE ILLUSTRATIVE ONLY UNLESS OTHERWISE STATED AND SHOULD NOT BE USED FOR CONSTRUCTION.
5. BENCHING IS TO BE FORMED AFTER PUMP INSTALLATION AND TO BE IN ACCORDANCE WITH THE APPLICABLE SEWERS FOR ADOPTION AND ADOPTING AUTHORITY SPECIFICATION.
6. UNLESS OTHERWISE STATED, ALL DUCTS ARE TO BE Ø100MM AND BE COMPLETE WITH DRAW ROPES. SERVICE DUCTS TO BE TO THE UTILITY SUPPLIERS SPECIFICATION.
7. DUCT ROUTES ARE SHOWN DIAGRAMMATICALLY ONLY. ALL DUCTS LAID IN THE MOST DIRECT ROUTE TO SUIT THE SERVICE BEING CARRIED AVOIDING ANY ACUTE CHANGES OF DIRECTION.
8. LEVEL CONTROL POSITIONS ARE SHOWN DIAGRAMMATICALLY ONLY. THEY WILL BE POSITIONED AWAY FROM OBSTRUCTIONS AND BE READILY ADJUSTABLE AFTER INSTALLATION.

*READ IN CONJUNCTION WITH MJA STRUCTURAL DRAWINGS*

*Note:*
*Earth bonding connections indicated thus:*

*The following actual equipment must be bonded to the earthing terminal:*

1. *All case earth connections, ect, in the kiosk/building;*
2. *Metal ladder (Not applicable)*
3. *Pump Guiderails*
4. *Pump delivery pipes;*
5. *Metal rising main; and*
6. *Metal cover support frames.*

*The pump casing is connected to the protective multiple earth (P.M.E.) earthing terminal via the flexible cable between the pump and the kiosk/building.*

| REV | DATE | DESCRIPTION | DR'n | CHK'd | APR'l |
|---|---|---|---|---|---|
| A | 08/05/19 | Amended in line with structural drawings. | E.W. | - | P.W. |

# FOR APPROVAL

PDAS
Pump Design and Services Ltd
UNIT 7, STANHOPE GATE, STANHOPE ROAD, CAMBERLEY, SURREY, GU15 3DW
OFFICE TEL No. (01483) 930520
WEBSITE WWW.PDASLTD.CO.UK

| | | | |
|---|---|---|---|
| PROJECT | BURNDELL ROAD YAPTON | | |
| TITLE | FOUL WATER PUMP STATION EARTHING DETAIL | | |
| CLIENT | BOVIS HOMES SOUTHERN HOME COUNTIES | | |
| SCALE AT A1 1:20 | | SCALE AT A3 1:40 | |
| QUOTE NUMBER Q10276 | APR'l P.W. | | DATE 26-03-2019 |
| PROJECT REF. PR10869 | CHK'd P.W. | | DATE 26-03-2019 |
| DRAWING NUMBER PR10869 - 005 | DR'n E.W. | | DATE 26-03-2019 |

DRAWING PROVIDED COURTESY OF PDAS LTD. UPON HANDOVER ALL DOCUMENT CONFIDENTIALITY AT CLIENTS DISCRETION

ARUNDISTRICTCOUNCIL V:\10119\DOC

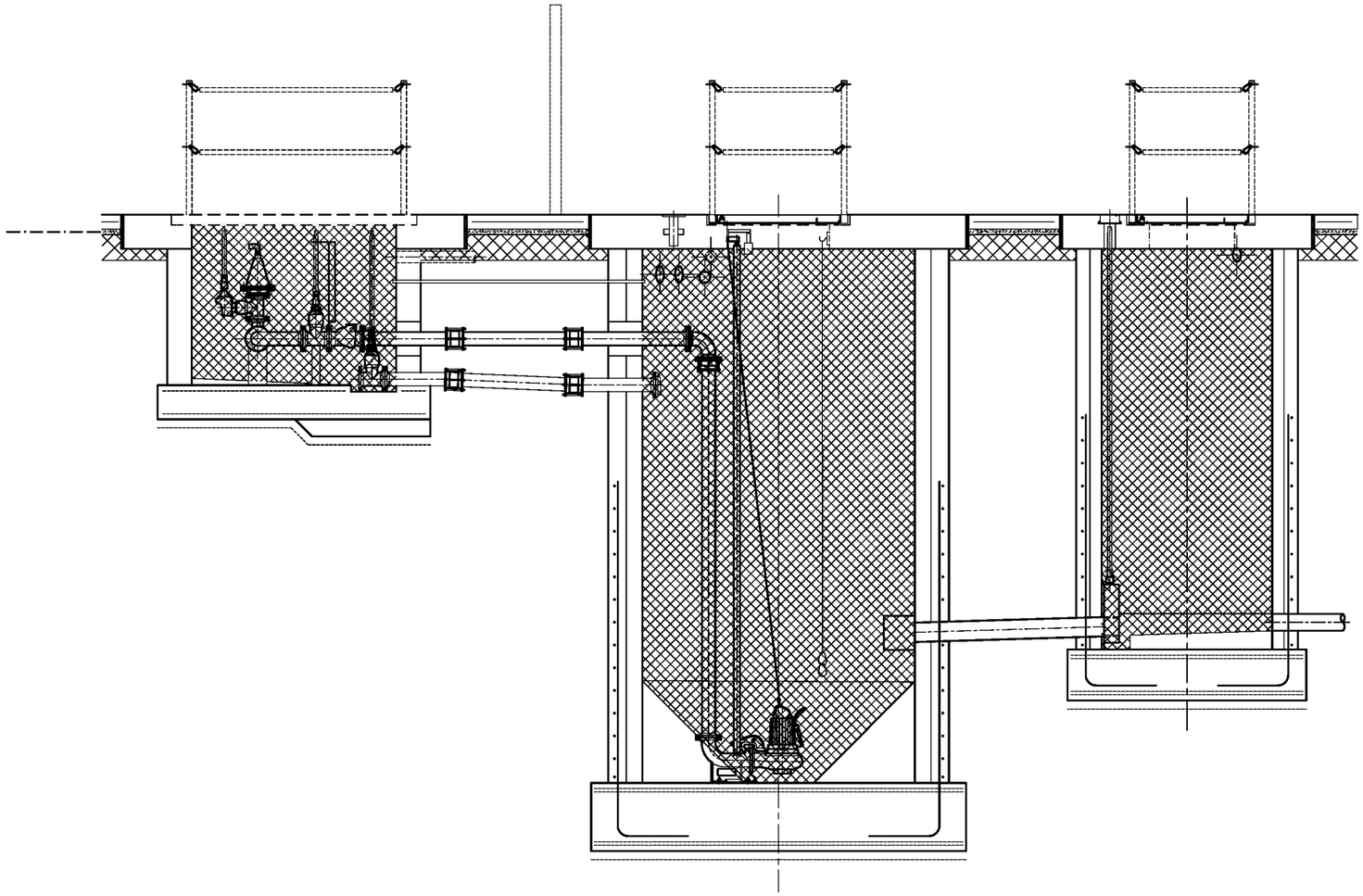

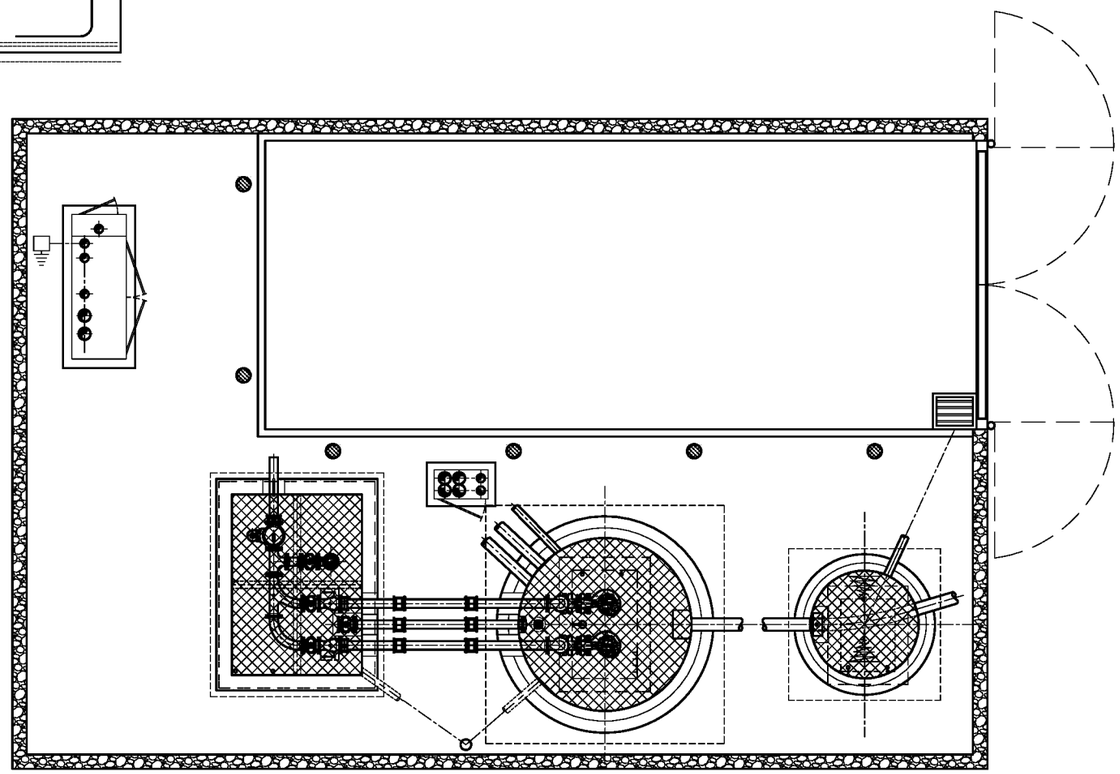

NOT TO SCALE

**NOTES**

1. DO NOT SCALE.
2. UNLESS OTHERWISE STATED ALL DIMENSIONS ARE IN MILLIMETRES AND ALL INVERTS IN METRES AOD.
3. ALL CIVIL WORKS IS THE RESPONSIBILITY OF THE DEVELOPER OR CONTRACTOR INCLUDING FIXING OF STEELWORK SUCH AS ACCESS COVERS AND PENSTOCKS ETC. INSTALLATION OF CABLE DUCTS, BENCHING AND MAKING GOOD AROUND PIPES AFTER INSTALLATION.
4. REINFORCING BARS ARE TO BE A MINIMUM OF 75MM BELOW THE SURFACE. ANY STRUCTURAL DETAILING / CIVIL WORKS SHOWN SHOWN ON THIS DRAWING ARE ILLUSTRATIVE ONLY UNLESS OTHERWISE STATED AND SHOULD NOT BE USED FOR CONSTRUCTION.
5. BENCHING IS TO BE FORMED AFTER PUMP INSTALLATION AND TO BE IN ACCORDANCE WITH THE APPLICABLE SEWERS FOR ADOPTION AND ADOPTING AUTHORITY SPECIFICATION.
6. UNLESS OTHERWISE STATED, ALL DUCTS ARE TO BE Ø100MM AND BE COMPLETE WITH DRAW ROPES. SERVICE DUCTS TO BE TO THE UTILITY SUPPLIERS SPECIFICATION.
7. DUCT ROUTES ARE SHOWN DIAGRAMMATICALLY ONLY. ALL DUCTS LAID IN THE MOST DIRECT ROUTE TO SUIT THE SERVICE BEING CARRIED AVOIDING ANY ACUTE CHANGES OF DIRECTION.
8. LEVEL CONTROL POSITIONS ARE SHOWN DIAGRAMMATICALLY ONLY. THEY WILL BE POSITIONED AWAY FROM OBSTRUCTIONS AND BE READILY ADJUSTABLE AFTER INSTALLATION.

*READ IN CONJUNCTION WITH MJA STRUCTURAL DRAWINGS*

*Cable Ducts in accordance with SFA7 F.3.4.4 and BS EN 1401-01 & BS 4660 sealed with rise sealant system Gas + waterproof sealant system*

*LEGEND*

- *Non Hazardous Zone*
- *Zone 2*
- *Zone 1*

| REV | DATE | DESCRIPTION | DR'n | CHK'd | APR'l |
|---|---|---|---|---|---|
| A | 08/05/19 | Amended in line with structural drawings. | E.W. | - | P.W. |

# FOR APPROVAL


PDAS
Pump Design and Services Ltd
UNIT 7, STANHOPE GATE, STANHOPE ROAD, CAMBERLEY, SURREY, GU15 3DW
OFFICE TEL No. (01483) 930520
WEBSITE WWW.PDASLTD.CO.UK


| | | | |
|---|---|---|---|
| PROJECT | BURNDELL ROAD YAPTON | | |
| TITLE | FOUL WATER PUMP STATION HAZARDOUS ZONING | | |
| CLIENT | BOVIS HOMES SOUTHERN HOME COUNTIES | | |
| SCALE AT A1 1:25 | SCALE AT A3 1:50 | | |
| QUOTE NUMBER Q10276 | APR'l P.W. | DATE 26-03-2019 | |
| PROJECT REF. PR10869 | CHK'd P.W. | DATE 26-03-2019 | |
| DRAWING NUMBER PR10869 - 006 | DR'n E.W. | DATE 26-03-2019 | |


DRAWING PROVIDED COURTESY OF PDAS LTD. UPON HANDOVER ALL DOCUMENT CONFIDENTIALITY AT CLIENTS DISCRETION



ARUN DISTRICT COUNCIL X:\101119.DOC

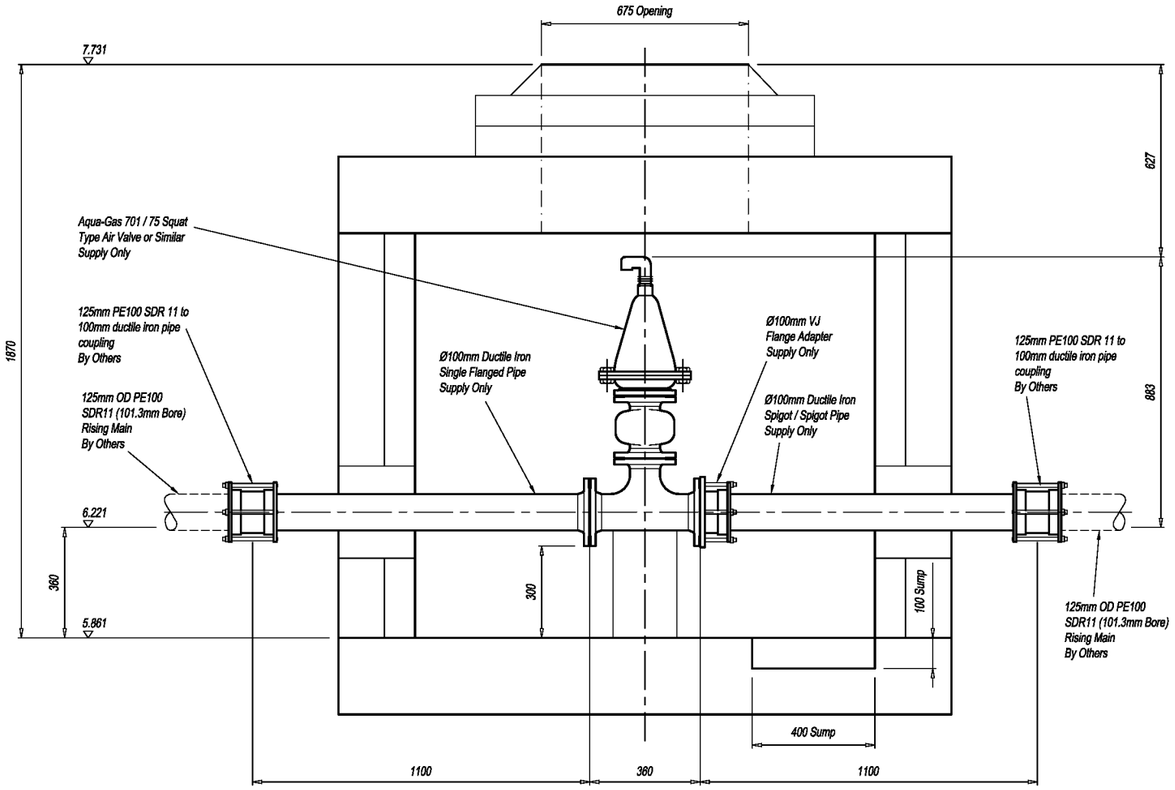


**VIEW ON SECTION Y - Y**

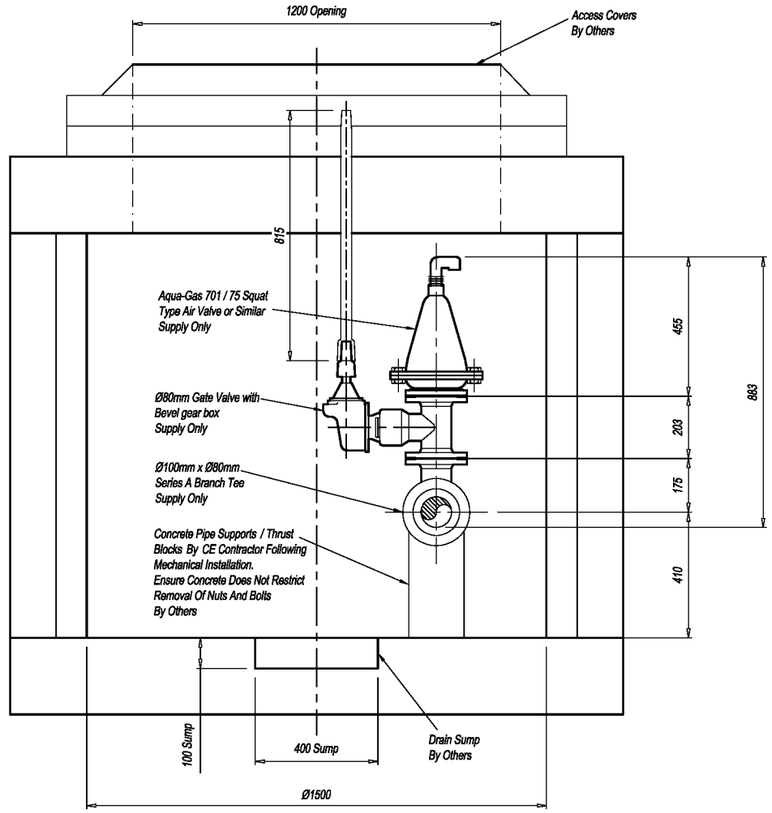


**VIEW ON ARROW Z - Z**

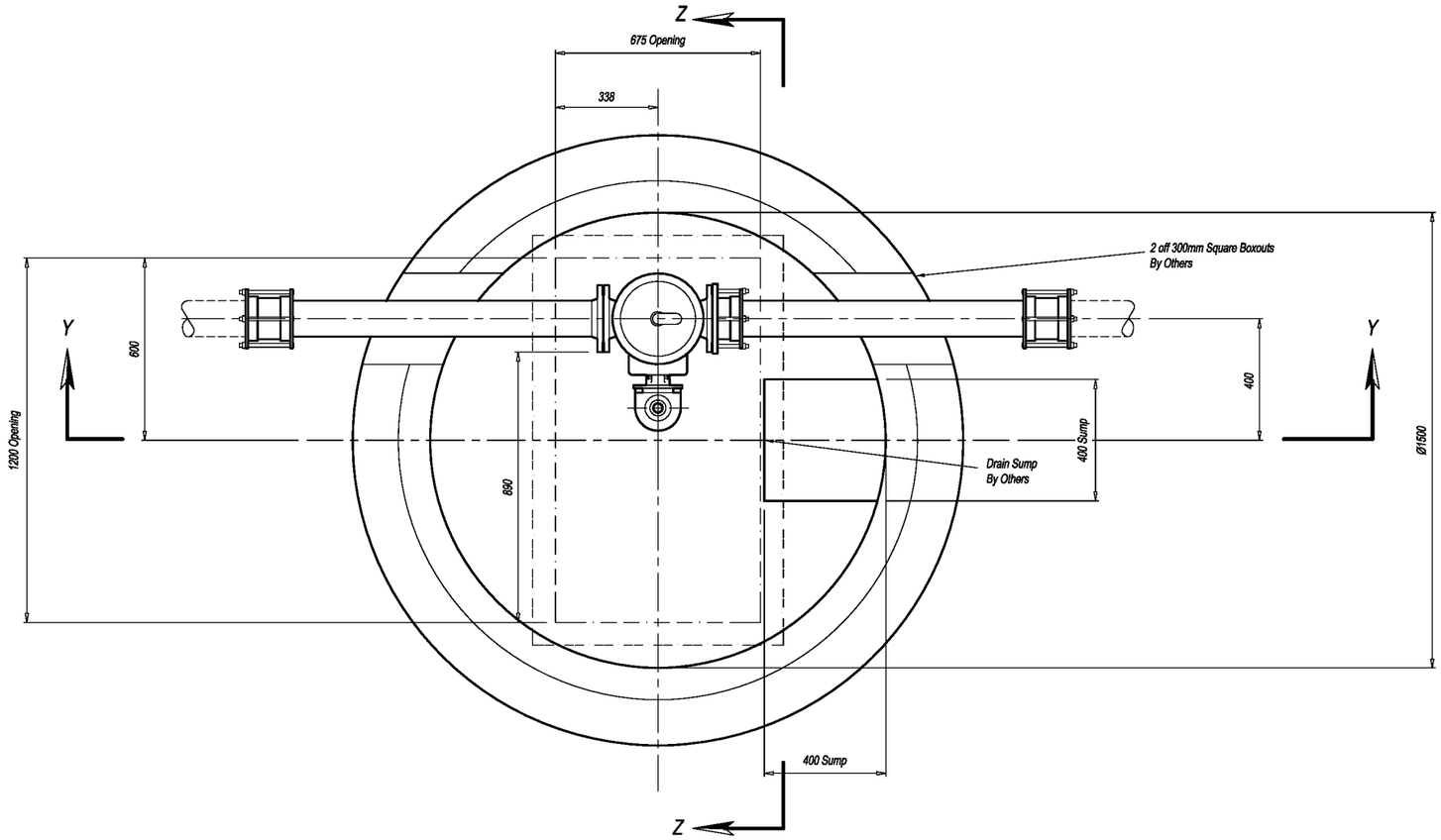


**NOTES**

1. DO NOT SCALE.
2. UNLESS OTHERWISE STATED ALL DIMENSIONS ARE IN MILLIMETRES AND ALL INVERTS IN METRES AOD.
3. ALL CIVIL WORKS IS THE RESPONSIBILITY OF THE DEVELOPER OR CONTRACTOR INCLUDING FIXING OF STEELWORK SUCH AS ACCESS COVERS AND PENSTOCKS ETC. INSTALLATION OF CABLE DUCTS, BENCHING AND MAKING GOOD AROUND PIPES AFTER INSTALLATION.
4. REINFORCING BARS ARE TO BE A MINIMUM OF 75MM BELOW THE SURFACE. ANY STRUCTURAL DETAILING / CIVIL WORKS SHOWN SHOWN ON THIS DRAWING ARE ILLUSTRATIVE ONLY UNLESS OTHERWISE STATED AND SHOULD NOT BE USED FOR CONSTRUCTION.
5. BENCHING IS TO BE FORMED AFTER PUMP INSTALLATION AND TO BE IN ACCORDANCE WITH THE APPLICABLE SEWERS FOR ADOPTION AND ADOPTING AUTHORITY SPECIFICATION.
6. UNLESS OTHERWISE STATED, ALL DUCTS ARE TO BE Ø100MM AND BE COMPLETE WITH DRAW ROPES. SERVICE DUCTS TO BE TO THE UTILITY SUPPLIERS SPECIFICATION.
7. DUCT ROUTES ARE SHOWN DIAGRAMMATICALLY ONLY. ALL DUCTS LAID IN THE MOST DIRECT ROUTE TO SUIT THE SERVICE BEING CARRIED AVOIDING ANY ACUTE CHANGES OF DIRECTION.
8. LEVEL CONTROL POSITIONS ARE SHOWN DIAGRAMMATICALLY ONLY. THEY WILL BE POSITIONED AWAY FROM OBSTRUCTIONS AND BE READILY ADJUSTABLE AFTER INSTALLATION.

*All Cut Pipe Joints As Close To Structure As Possible Consistent With Making The Joint.*

| REV | DATE | DESCRIPTION | DR'n | CHK'd | APR'l |
|---|---|---|---|---|---|
| A | 21/05/19 | Cover level raised & chainage amended. | E.W. | - | P.W. |

# FOR APPROVAL

PDAS
Pump Design and Services Ltd
UNIT 7, STANHOPE GATE, STANHOPE ROAD, CAMBERLEY, SURREY, GU15 3DW
OFFICE TEL No. (01483) 930520
WEBSITE WWW.PDASLTD.CO.UK

| | |
|---|---|
| PROJECT | BURNDELL ROAD YAPTON |
| TITLE | FOUL WATER PUMP STATION AIR VALVE CHAMBER AT CHAINAGE 127.951M |
| CLIENT | BOVIS HOMES SOUTHERN HOME COUNTIES |
| SCALE AT A1 | 1:10 |
| SCALE AT A3 | 1:20 |
| QUOTE NUMBER | Q10276 |
| APR'l | P.W. |
| DATE | 26-03-2019 |
| PROJECT REF. | PR10869 |
| CHK'd | P.W. |
| DATE | 26-03-2019 |
| DRAWING NUMBER | PR10869 - 007 |
| DR'n | E.W. |
| DATE | 26-03-2019 |

DRAWING PROVIDED COURTESY OF PDAS LTD. UPON HANDOVER ALL DOCUMENT CONFIDENTIALITY AT CLIENTS DISCRETION

ARUN DISTRICT COUNCIL V:\01\19\DOC

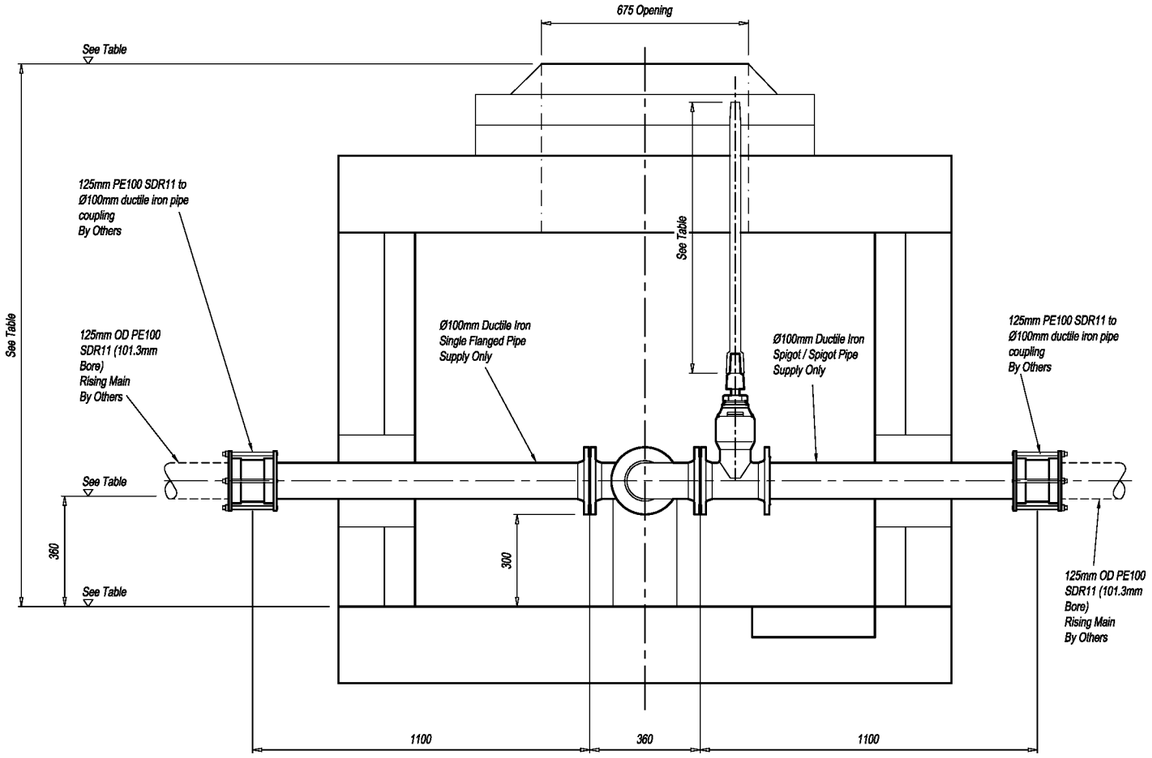


**VIEW ON SECTION X - X**

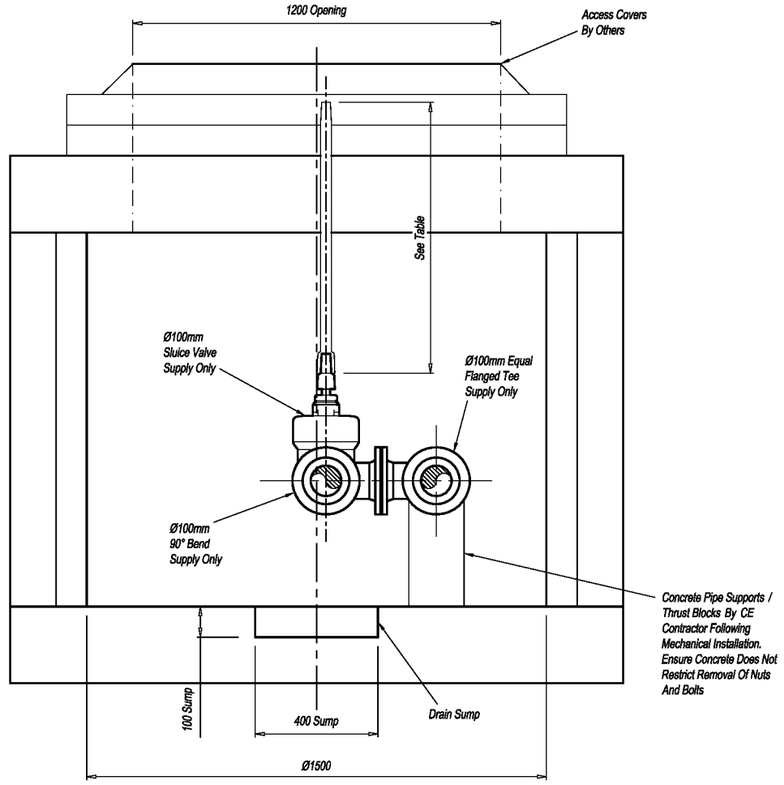


**VIEW ON ARROW W - W**

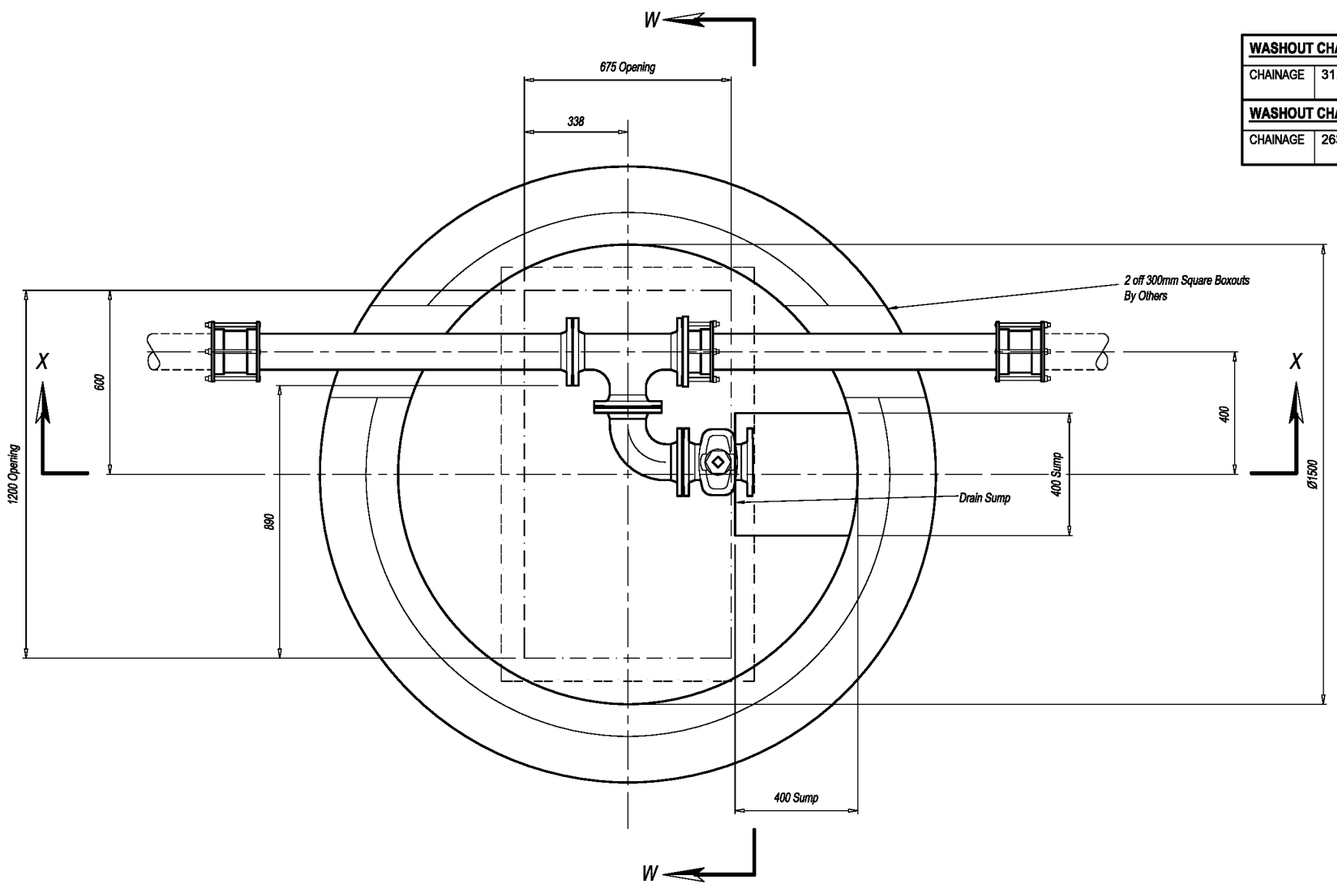


| WASHOUT CHAMBER - 1 | | | | | | | | | | | |
|---|---|---|---|---|---|---|---|---|---|---|---|
| CHAINAGE | 31.332 | COVER LEVEL | 6.618 | INVERT LEVEL | 3.918 | BASE LEVEL | 3.558 | CHAMBER DEPTH | 3060 | SPINDLE LENGTH | 2175 |
| **WASHOUT CHAMBER - 2** | | | | | | | | | | | |
| CHAINAGE | 263.506 | COVER LEVEL | 6.484 | INVERT LEVEL | 5.074 | BASE LEVEL | 4.714 | CHAMBER DEPTH | 1770 | SPINDLE LENGTH | 885 |

Drawing Based on WO2 Levels

All Cut Pipe Joints As Close To Structure As Possible Consistent With Making The Joint.

**NOTES**

1. DO NOT SCALE.
2. UNLESS OTHERWISE STATED ALL DIMENSIONS ARE IN MILLIMETRES AND ALL INVERTS IN METRES AOD.
3. ALL CIVIL WORKS IS THE RESPONSIBILITY OF THE DEVELOPER OR CONTRACTOR INCLUDING FIXING OF STEELWORK SUCH AS ACCESS COVERS AND PENSTOCKS ETC. INSTALLATION OF CABLE DUCTS, BENCHING AND MAKING GOOD AROUND PIPES AFTER INSTALLATION.
4. REINFORCING BARS ARE TO BE A MINIMUM OF 75MM BELOW THE SURFACE. ANY STRUCTURAL DETAILING / CIVIL WORKS SHOWN SHOWN ON THIS DRAWING ARE ILLUSTRATIVE ONLY UNLESS OTHERWISE STATED AND SHOULD NOT BE USED FOR CONSTRUCTION.
5. BENCHING IS TO BE FORMED AFTER PUMP INSTALLATION AND TO BE IN ACCORDANCE WITH THE APPLICABLE SEWERS FOR ADOPTION AND ADOPTING AUTHORITY SPECIFICATION.
6. UNLESS OTHERWISE STATED, ALL DUCTS ARE TO BE Ø100MM AND BE COMPLETE WITH DRAW ROPES. SERVICE DUCTS TO BE TO THE UTILITY SUPPLIERS SPECIFICATION.
7. DUCT ROUTES ARE SHOWN DIAGRAMMATICALLY ONLY. ALL DUCTS LAID IN THE MOST DIRECT ROUTE TO SUIT THE SERVICE BEING CARRIED AVOIDING ANY ACUTE CHANGES OF DIRECTION.
8. LEVEL CONTROL POSITIONS ARE SHOWN DIAGRAMMATICALLY ONLY. THEY WILL BE POSITIONED AWAY FROM OBSTRUCTIONS AND BE READILY ADJUSTABLE AFTER INSTALLATION.

| REV | DATE | DESCRIPTION | DR'n | CHK'd | APR'l |
|---|---|---|---|---|---|
| A | 21/05/19 | Levels, chamber depths & chainage amended. | E.W. | " | P.W. |

# FOR APPROVAL

PDAS
Pump Design and Services Ltd
UNIT 7, STANHOPE GATE, STANHOPE ROAD, CAMBERLEY, SURREY, GU15 3DW
OFFICE TEL No. (01483) 930520
WEBSITE WWW.PDASLTD.CO.UK

| | | | |
|---|---|---|---|
| PROJECT | BURNDELL ROAD YAPTON | | |
| TITLE | FOUL WATER PUMP STATION WASHOUT CHAMBER DETAILS | | |
| CLIENT | BOVIS HOMES SOUTHERN HOME COUNTIES | | |
| SCALE AT A1 | 1:10 | SCALE AT A3 | 1:20 |
| QUOTE NUMBER | Q10276 | APR'l P.W. | DATE 26-03-2019 |
| PROJECT REF. | PR10869 | CHK'd P.W. | DATE 26-03-2019 |
| DRAWING NUMBER | PR10869 - 008 | DR'n E.W. | DATE 26-03-2019 |

DRAWING PROVIDED COURTESY OF PDAS LTD. UPON HANDOVER ALL DOCUMENT CONFIDENTIALITY AT CLIENTS DISCRETION

ARUNDISTRICTCOUNCIL_V1.01.19.DOC

**Structural Drawings**



ARUN DISTRICT COUNCIL Y/101/19/DOC

Pumping equipment as specified and detailed by PDAS Ltd.

| Minimum Laps for Reinforcement | |
|---|---|
| Bar Dia | Lap Lengths |
| B8 | 325 mm |
| B10 | 400 mm |
| B12 | 475 mm |
| B16 | 625 mm |
| B20 | 1050 mm |
| B25 | 1300 mm |
| B32 | 1675 mm |

All minimum laps to reinforcement are to comply with the requirements of BS 8110.

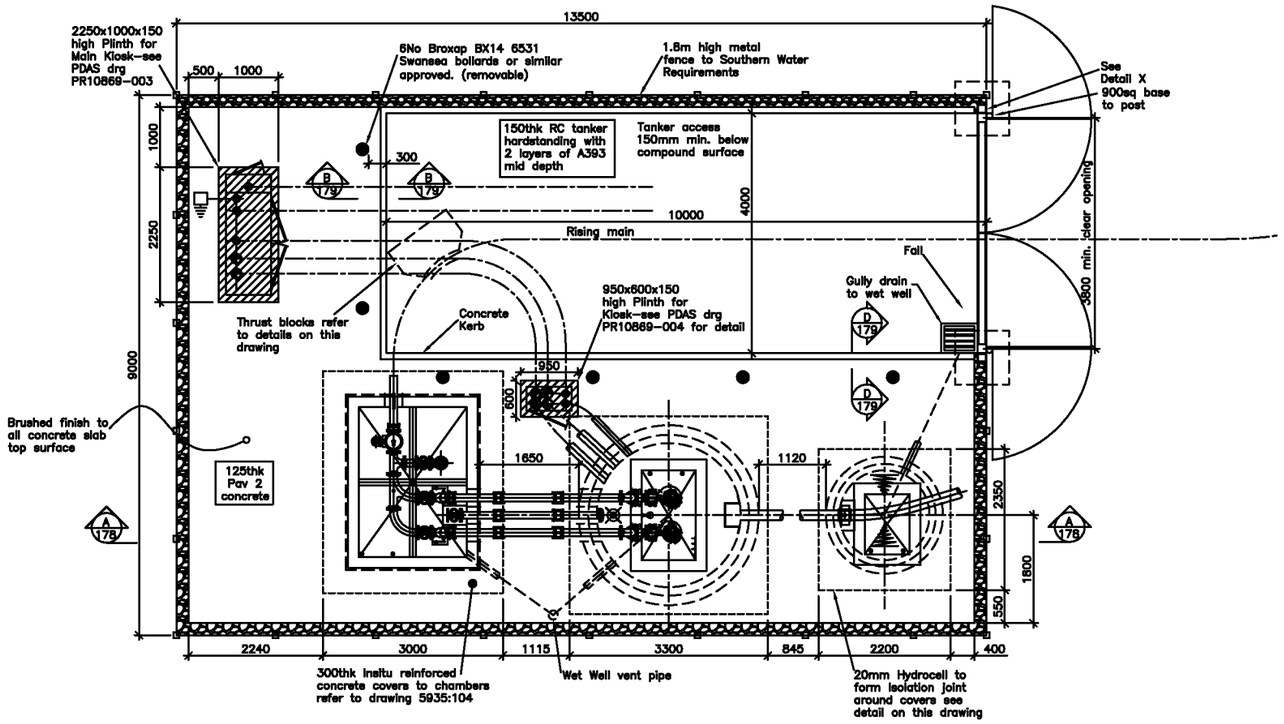


Setting out layout
(1:50)

Note: all dimensions indicated are to be confirmed on site

1 layer of A393 Mesh mid depth in 125thk PAV with 400mm laps (flying ends)

Details in accordance with PDAS Ltd drg PR10869–005 dated 26.03.19.
Check against latest drawings before construction

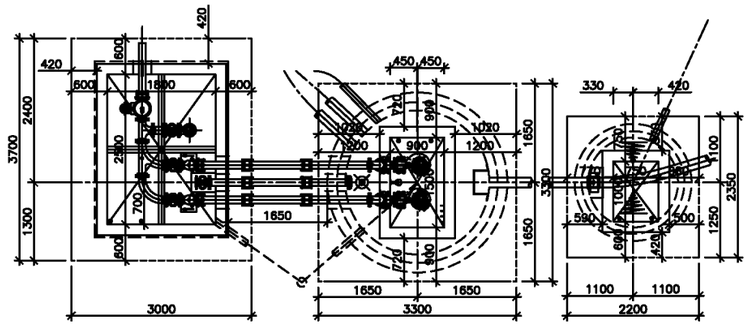

Plan at cover level
(1:50)

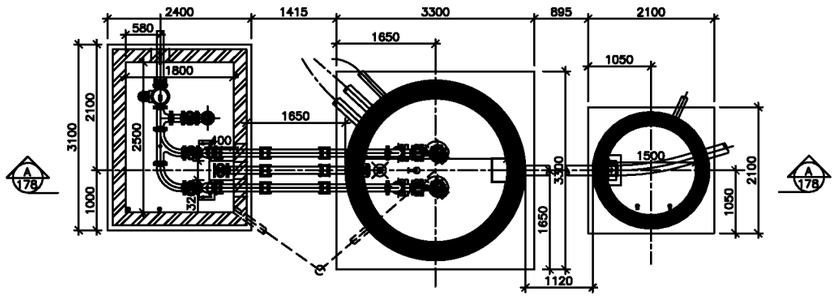

Plan at base level
(1:50)

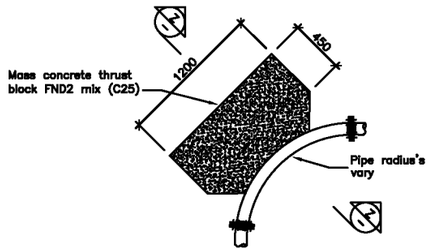


Plan View on External Thrust Blocks
(1:25)

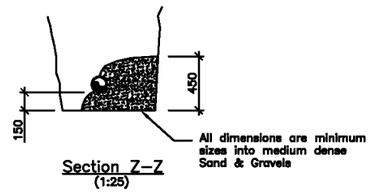


Section Z–Z
(1:25)

Note:
Use thrust blocks indicated at changes in direction along length of rising main.
Pipe orientations vary refer to PDAS details

FOR DETAILED NOTES PLEASE REFER TO DRAWING 5935:179

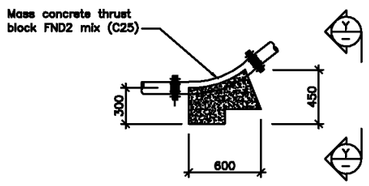


Elevation on Vertical bend Thrust Blocks
(1:25)

View Y–Y
(1:25)

PRELIMINARY FOR TENDER

| REV. No. | DATE | DESCRIPTION | INITIALS |
|---|---|---|---|

Client: PDAS Ltd

Project: Burndell Road, Yapton

Title: Pump Station GA & RC Details Sheet 1


MJA CONSULTING
CIVIL AND STRUCTURAL ENGINEERS
Monarch House, Barton Lane, Abingdon, Oxon, OX14 3NB
Tel: 01235 555173
Fax: 01235 523226


Scale: As shown @ A1
Date: April '19
Checked
Drawn: AK
Drawing No.: 5935:177
Rev: –

© This drawing is the copyright of Michael A Jennings Associates Limited and may not be copied, altered or reproduced in any way without their permission.

ARUN DISTRICT COUNCIL Y/101/19/DOC

FOR DETAILED NOTES PLEASE REFER TO DRAWING 5935:102

Pumping equipment as specified and detailed by PDAS Ltd.

Minimum lapps for reinforcement

| Bar Dia | Lap Lengths |
|---|---|
| B8 | 325 mm |
| B10 | 400 mm |
| B12 | 475 mm |
| B16 | 625 mm |
| B20 | 1050 mm |
| B25 | 1300 mm |
| B32 | 1675 mm |

All minimum laps to reinforcement are to comply with the requirements of BS 8110.

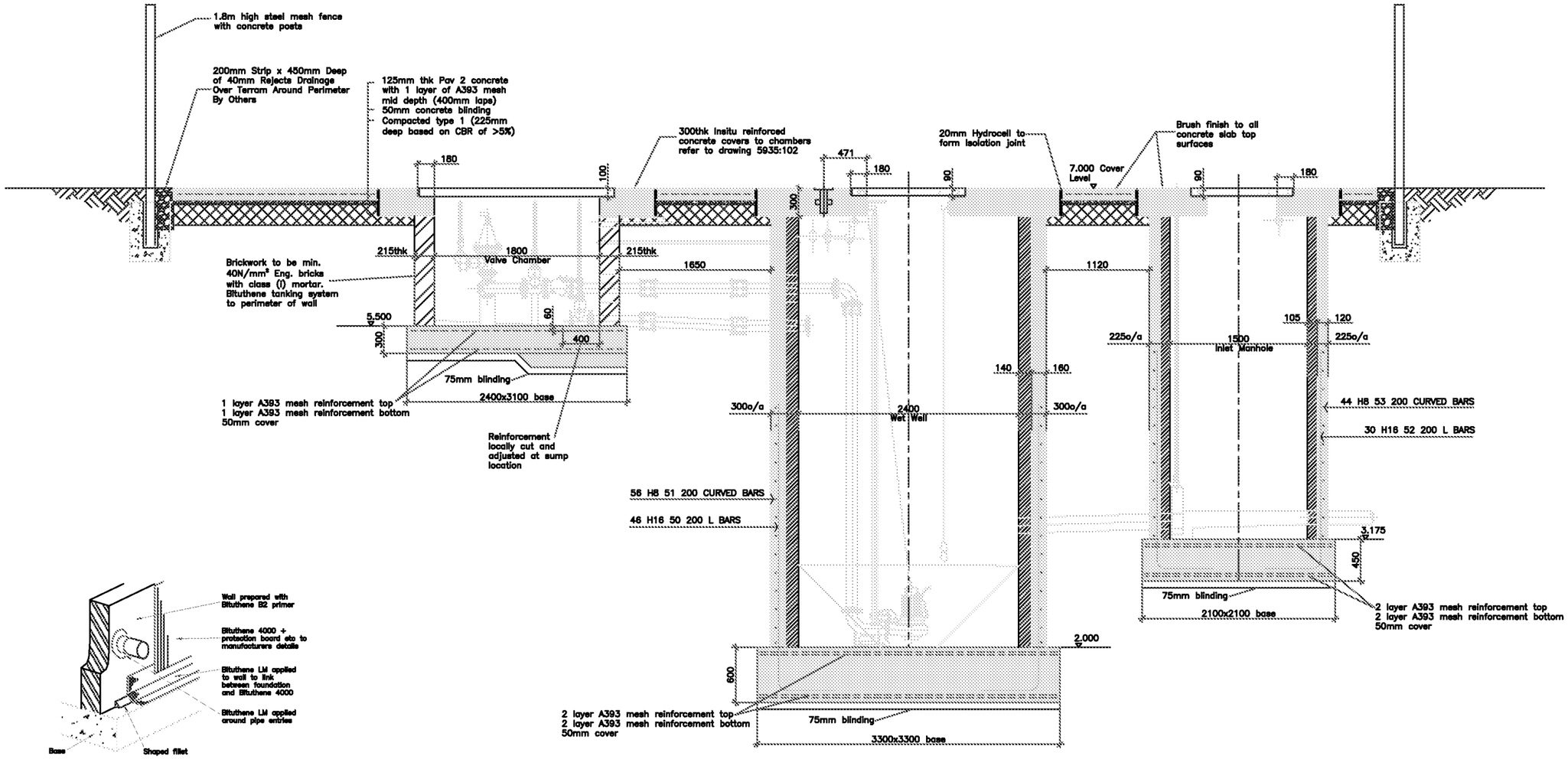


Section A — A
(1:25)




Isometric view
on valve chamber wall

Details of proprietary items PDAS Ltd are for indicative only refer to details. Check against latest drawings before construction.

PRELIMINARY FOR TENDER

| REV. No. | DATE | DESCRIPTION | INITIALS |
|---|---|---|---|

Client: PDAS Ltd

MJA CONSULTING
CIVIL AND STRUCTURAL ENGINEERS
Mulberry House, Barton Lane
Abingdon, Oxon, OX14 5QE
Tel: 01235 555178
Fax: 01235 528088

Project: Burpham PS Upgrade

Title: Valve Chamber Details Sheet 1 of 2

Scale: As shown @ A1

Date: April '19

Checked:

Drawn: PK

Drawing No.: 5935:178

Rev: --

ARUN DISTRICT COUNCIL Y/101/19/DOC

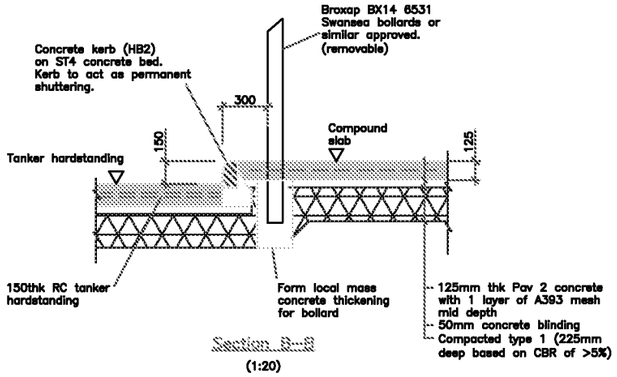


Section B–B
(1:20)

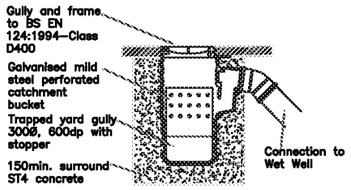


Trapped Yard Gully
(1:20)

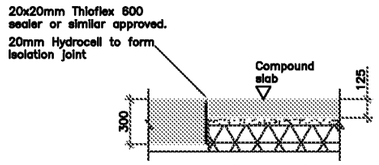


Isolation Joint
(1:20)

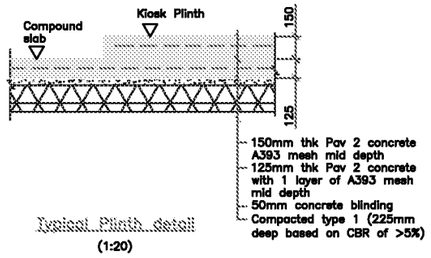


Typical Plinth detail
(1:20)

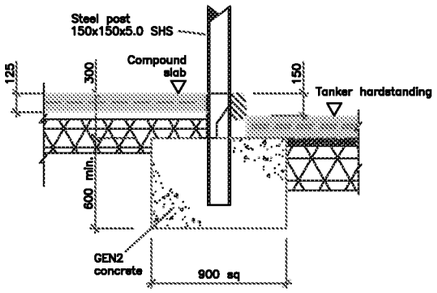


Section D – D
(1:20)

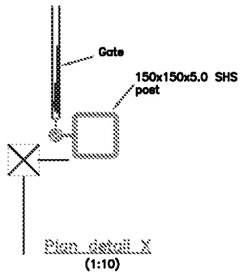


Plan detail X
(1:10)

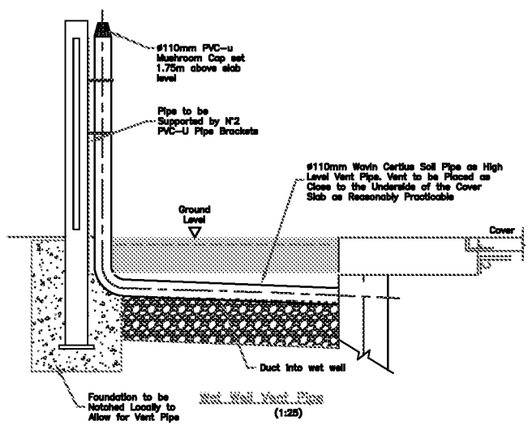


Wet Well Vent Pipe
(1:25)

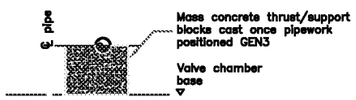


Thrust Block Section
(1:25)

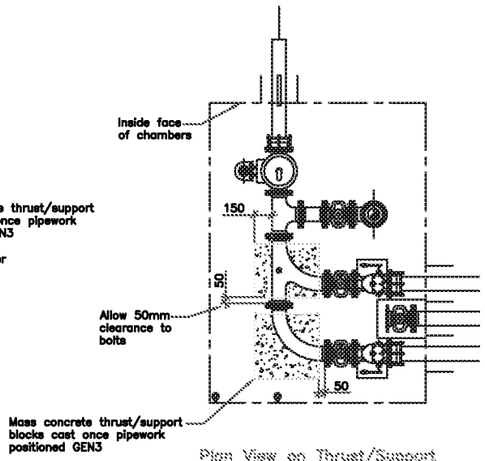


Plan View on Thrust/Support Blocks in Chambers
(1:25)

## General Notes

1. This drawing is to be read in conjunction with PDAS Ltd drawings.

2. Dimensions must not be scaled from this drawing.

3. All reinforced concrete is designed to BS 5400 and all construction is to comply with this code.

4. Reinforced concrete to be Grade: RC40/50 for below ground structure, specified in accordance with BS 8500 & BS 206–1.

Above ground/hard surface slabs to be exposure class XF2 & provide grade: PAV2 concrete.

All reinforced concrete below ground level to be exposure classes XD3, XC3/4, design sulphate class AC–2z & DC–2z in accordance with BRE Special Digest No 1:Part 1. Maximum aggregate size: 20mm.

5. Concrete test samples shall be provided in accordance with the requirements of BS EN 12350–1.

6. All excavations for reinforced concrete shall be kept free from water, loose material and rubbish.

7. Reinforcement should comply with BS 4449, 8666, 4482 or 4483. All reinforcement designated 'B' should be high yield high yield in accordance with BS 4482 and BS 4483.

8. Reinforcement shall be free from oils, paint etc (which may adversely affect its bond with the concrete).

9. Cover to reinforcement to be: Nominal 50mm cover when cast against shutters & blinding, 75mm all other faces. Tolerance Δc=15mm for below ground and for above ground/hard surface slabs nominal cover to be 50mm+Δc

10. Top reinforcement in slabs shall be supported on mild steel chairs to ensure all reinforcement has the required cover of concrete.

11. Spacer blocks are to be made of precast concrete or a suitable plastic alternative. They shall be used to ensure that all reinforcement has the required cover of concrete. Pieces of wood, brick etc are not permitted.

12. It shall be the responsibility of the contractor to check bending schedules against the drawings prior to the ordering of the reinforcement and to notify the Engineer of any discrepancies.

13. The structure is designed to be stable upon completion, temporary stability is the responsibility of the Contrator.

14. Surface finish to contract specification.

Pumping equipment as specified and detailed by PDAS Ltd.

### Minimum Laps Per Reinforcement

| Bar Dia | Lap Lengths |
|---|---|
| B8 | 325 mm |
| B10 | 400 mm |
| B12 | 475 mm |
| B16 | 625 mm |
| B20 | 1050 mm |
| B25 | 1300 mm |
| B32 | 1675 mm |

All minimum laps to reinforcement are to comply with the requirements of BS 8110.

PRELIMINARY FOR TENDER

| REV. No. | DATE | DESCRIPTION | INITIALS |
|---|---|---|---|

Client: PDAS Ltd

MJA CONSULTING
CIVIL AND STRUCTURAL ENGINEERS
Mulberry House, Barford Lane, Abingdon, Oxon, OX14 3NB
Tel: 01235 555173
Fax: 01235 528028

Project: Burpham Pump Station

Title: Pump Station Wet Well Details Sheet 1

Scale: As shown @ A1

Date: Jan 19

Checked

Drawn: JK

Drawing No.: 5935:179

Rev: --

ARUN DISTRICT COUNCIL Y/101/19/DOC

**Appendix F**
**Wiring Diagrams**



ARUN DISTRICT COUNCIL Y/101/19/DOC

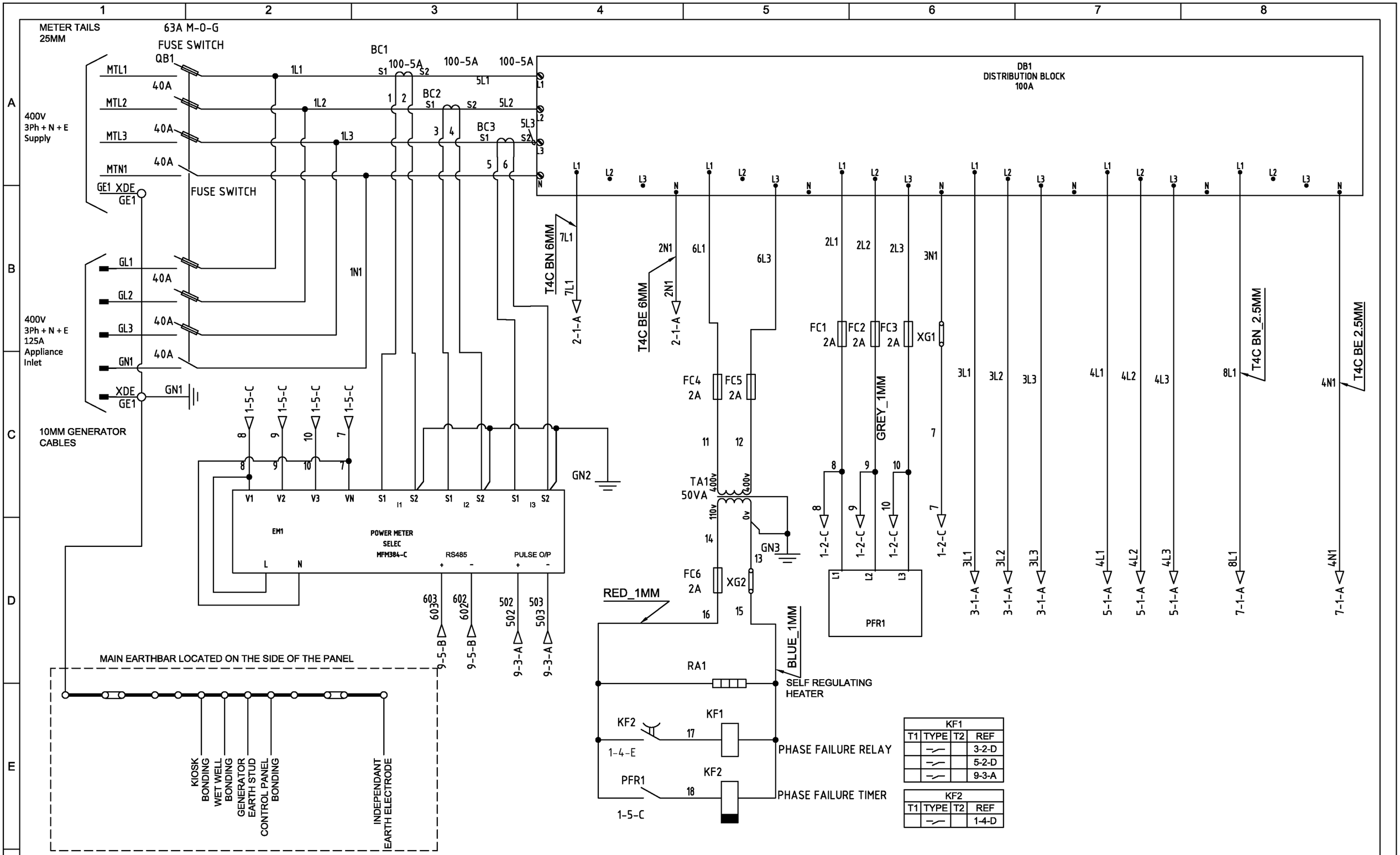


| KF1 | | | |
|---|---|---|---|
| T1 | TYPE | T2 | REF |
| | | | 3-2-D |
| | | | 5-2-D |
| | | | 9-3-A |

| KF2 | | | |
|---|---|---|---|
| T1 | TYPE | T2 | REF |
| | | | 1-4-D |

| Rev | Description | Date | Drn | Apprv |
|---|---|---|---|---|
| A | FIRST ISSUE | 26/03/2019 | SMH | SMH |

Client Name
Bovis Homes, Southern Home Counties

Title SFA7 & SOUTHERN WATER SPEC
INCOMER SECTION

Drawn By
JH

Project Code
PR10869

Drawing No PR10869

gemini control systems ltd
designers and manufacturers

GEMINI CONTROL SYSTEMS LTD
TEL: 0844 800 4250
FAX: 0844 800 4251
WWW.GEMINI-CONTROLS.COM

interface ISO 9001 CERTIFICATION

Site
Burndell Road, Yapton

PDAS
Pump Design and Services Ltd

This document may not, without our permission, be copied, shown or handed out to competitors or any other unauthorised persons
Copyright Protected

Sheet No
1 of 13

GCD0025/C - 11/1/19

ARUN DISTRICT COUNCIL Y/101/19/DOC

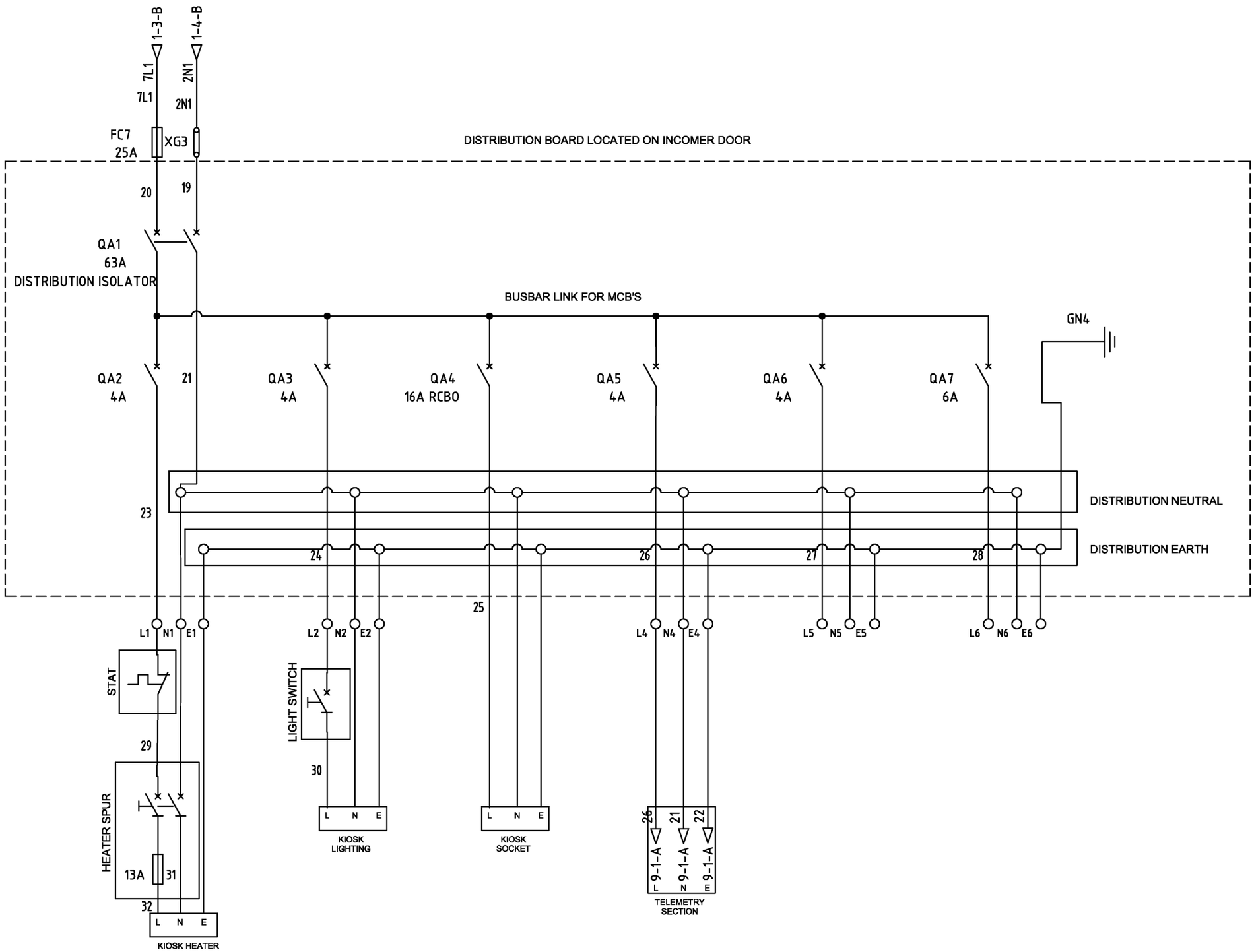


| | | | | | |
|---|---|---|---|---|---|
| A | FIRST ISSUE | 26/03/2019 | SMH | SMH | |
| Rev | Description | Date | Drn | Apprv | |

Client Name
Bovis Homes, Southern Home Counties

Title SFA7 & SOUTHERN WATER SPEC INCOMER/DISTRIBUTION

Drawn By JH

Project Code PR10869

Drawing No PR10869

gemini control systems ltd
designers and manufacturers

GEMINI CONTROL SYSTEMS LTD
TEL: 0844 800 4250
FAX: 0844 800 4251
WWW.GEMINI-CONTROLS.COM

interface ISO 9001 CERTIFICATION

Site
Burndell Road, Yapton

PDAS
Pump Design and Services Ltd

This document may not, without our permission, be copied, shown or handed out to competitors or any other unauthorised persons
Copyright Protected

Sheet No
2 of 13

GCD0025/C - 11/1/19

ARUN DISTRICT COUNCIL V/101/19/DOC

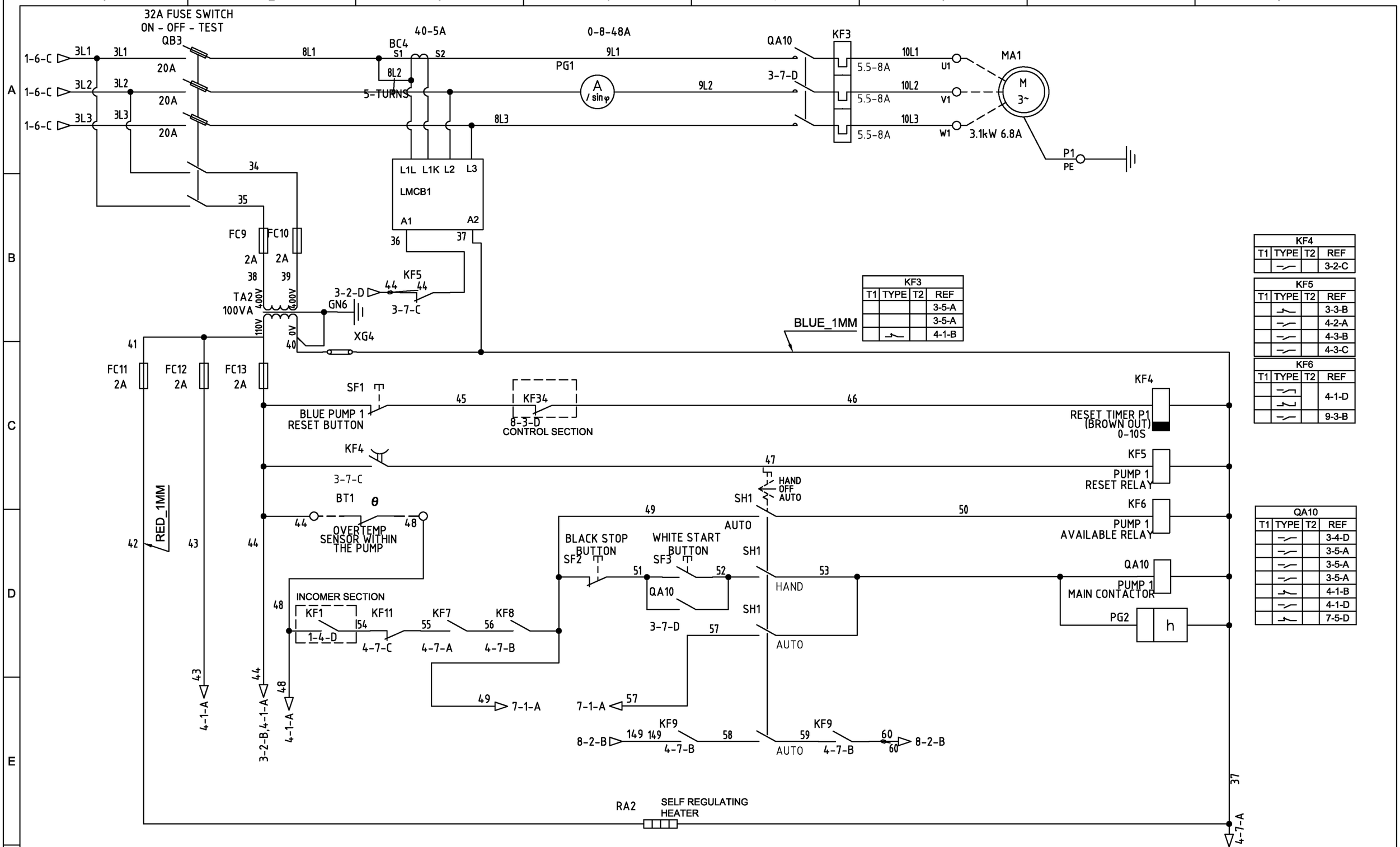


| Rev | Description | Date | Drn | Apprv |
|---|---|---|---|---|
| A | FIRST ISSUE | 26/03/2019 | SMH | SMH |

Client Name
Bovis Homes, Southern Home Counties

Title SFA7 & SOUTHERN WATER SPEC
PUMP 1 STARTER

Drawn By
JH

Project Code
PR10869

Drawing No PR10869

gemini control systems ltd
designers and manufacturers

GEMINI CONTROL SYSTEMS LTD
TEL: 0844 800 4250
FAX: 0844 800 4251
WWW.GEMINI-CONTROLS.COM

interface ISO 9001 CERTIFICATION

Site
Burndell Road, Yapton

PDAS
Pump Design and Services Ltd

This document may not, without our permission, be copied, shown or handed out to competitors or any other unauthorised persons
Copyright Protected

Sheet No
3 of 13

GCD0025/C - 11/1/19

ARUN DISTRICT COUNCIL Y/101/19/DOC

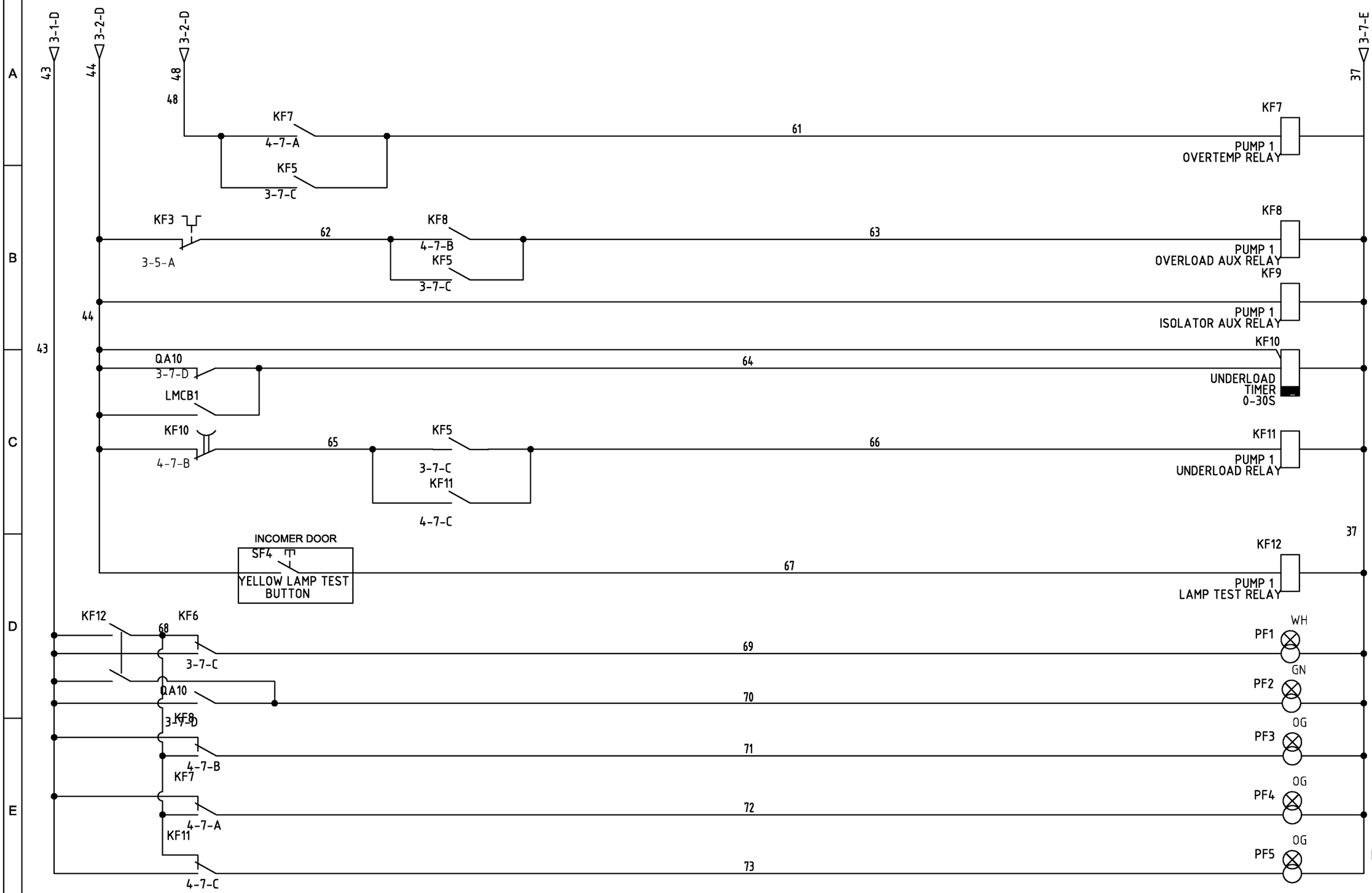


| KF7 | | | |
|---|---|---|---|
| T1 | TYPE | T2 | REF |
| | | | 3-3-D |
| | | | 4-1-E |
| | | | 4-2-A |
| | | | 9-3-B |

| KF8 | | | |
|---|---|---|---|
| T1 | TYPE | T2 | REF |
| | | | 3-3-D |
| | | | 4-1-D |
| | | | 4-3-B |
| | | | 9-3-B |

| KF9 | | | |
|---|---|---|---|
| T1 | TYPE | T2 | REF |
| | | | 3-4-D |
| | | | 3-5-D |
| | | | 7-5-D |
| | | | 7-6-D |

| KF10 | | | |
|---|---|---|---|
| T1 | TYPE | T2 | REF |
| | | | 4-1-C |

| KF11 | | | |
|---|---|---|---|
| T1 | TYPE | T2 | REF |
| | | | 3-2-D |
| | | | 4-1-E |
| | | | 4-3-C |
| | | | 9-3-B |

| KF12 | | | |
|---|---|---|---|
| T1 | TYPE | T2 | REF |
| | | | 4-1-D |
| | | | 4-1-D |

| Rev | Description | Date | Drn | Apprv |
|---|---|---|---|---|
| A | FIRST ISSUE | 26/03/2019 | SMH | SMH |

Client Name
Bovis Homes, Southern Home Counties

Title SFA7 & SOUTHERN WATER SPEC
PUMP 1 STARTER

Drawn By
JH

Project Code
PR10869

Drawing No PR10869

gemini control systems ltd
designers and manufacturers

GEMINI CONTROL SYSTEMS LTD
TEL: 0844 800 4250
FAX: 0844 800 4251
WWW.GEMINI-CONTROLS.COM

interface ISO 9001 CERTIFICATION

Site
Burndell Road, Yapton

PDAS
Pump Design and Services Ltd

This document may not, without our permission, be copied, shown or handed out to competitors or any other unauthorised persons
Copyright Protected

Sheet No
4 of 13

GCD0025/C - 11/1/19

ARUN DISTRICT COUNCIL Y101/19/DOC

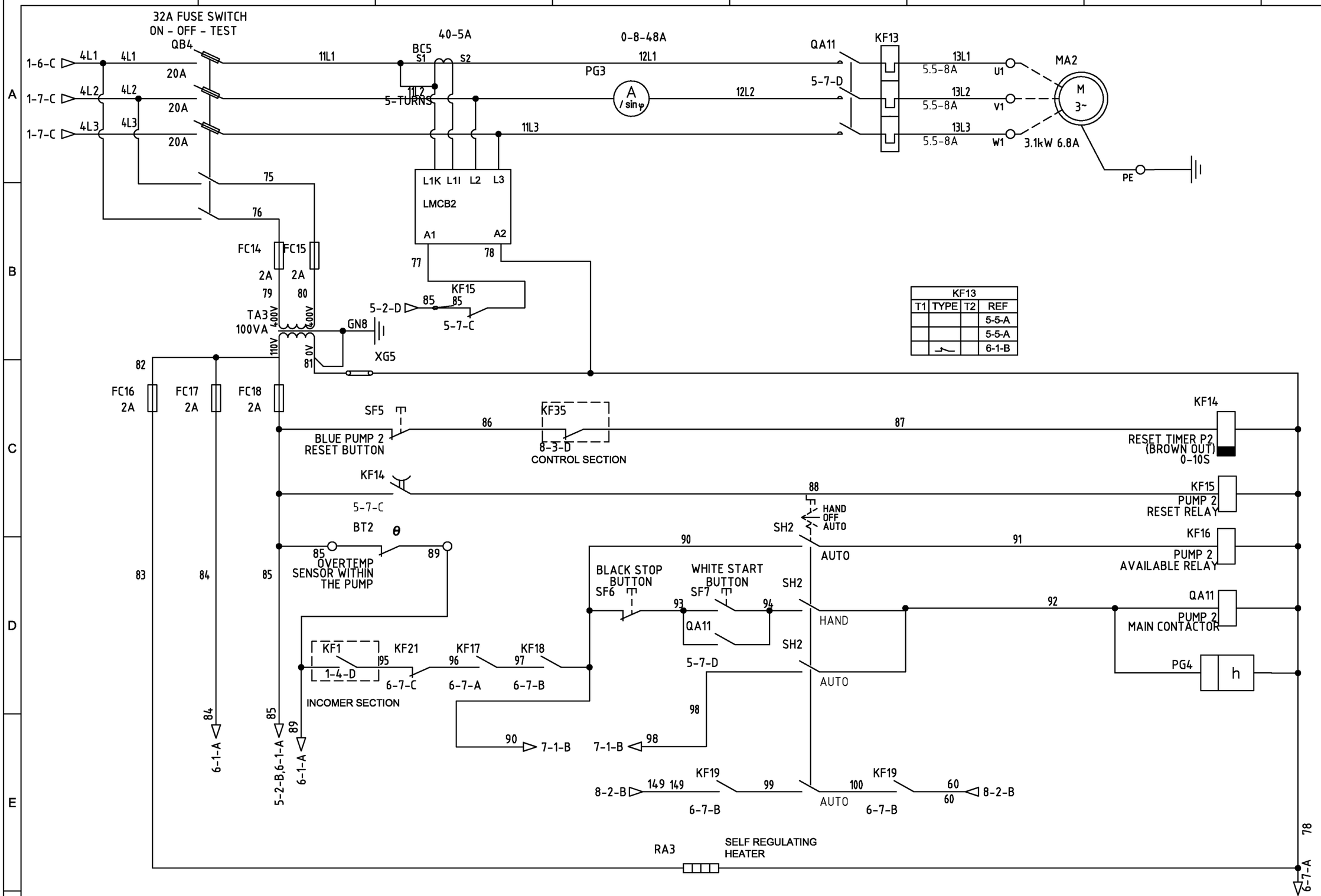


| KF13 | | | |
|---|---|---|---|
| T1 | TYPE | T2 | REF |
| | | | 5-5-A |
| | | | 5-5-A |
| | | | 6-1-B |

| KF14 | | | |
|---|---|---|---|
| T1 | TYPE | T2 | REF |
| | | | 5-2-C |

| KF15 | | | |
|---|---|---|---|
| T1 | TYPE | T2 | REF |
| | | | 5-3-B |
| | | | 6-2-A |
| | | | 6-3-B |
| | | | 6-3-C |

| KF16 | | | |
|---|---|---|---|
| T1 | TYPE | T2 | REF |
| | | | 6-1-D |
| | | | 6-1-D |
| | | | 9-3-C |

| QA11 | | | |
|---|---|---|---|
| T1 | TYPE | T2 | REF |
| | | | 5-4-D |
| | | | 5-5-A |
| | | | 5-5-A |
| | | | 5-5-A |
| | | | 6-1-B |
| | | | 6-1-D |
| | | | 7-5-E |
| | | | 9-3-A |
| | | | 9-3-B |

| Rev | Description | Date | Drn | Apprv |
|---|---|---|---|---|
| A | FIRST ISSUE | 26/03/2019 | SMH | SMH |

Client Name
Bovis Homes, Southern Home Counties

Title SFA7 & SOUTHERN WATER SPEC
PUMP 2 STARTER

Drawn By JH

Project Code PR10869

Drawing No PR10869

gemini control systems ltd
designers and manufacturers

GEMINI CONTROL SYSTEMS LTD
TEL: 0844 800 4250
FAX: 0844 800 4251
WWW.GEMINI-CONTROLS.COM

interface ISO 9001 CERTIFICATION

Site
Burndell Road, Yapton

PDAS
Pump Design and Services Ltd

This document may not, without our permission, be copied, shown or handed out to competitors or any other unauthorised persons
Copyright Protected

Sheet No
5 of 13

GCD0025/C - 11/1/19

ARUN DISTRICT COUNCIL Y/101/19/DOC

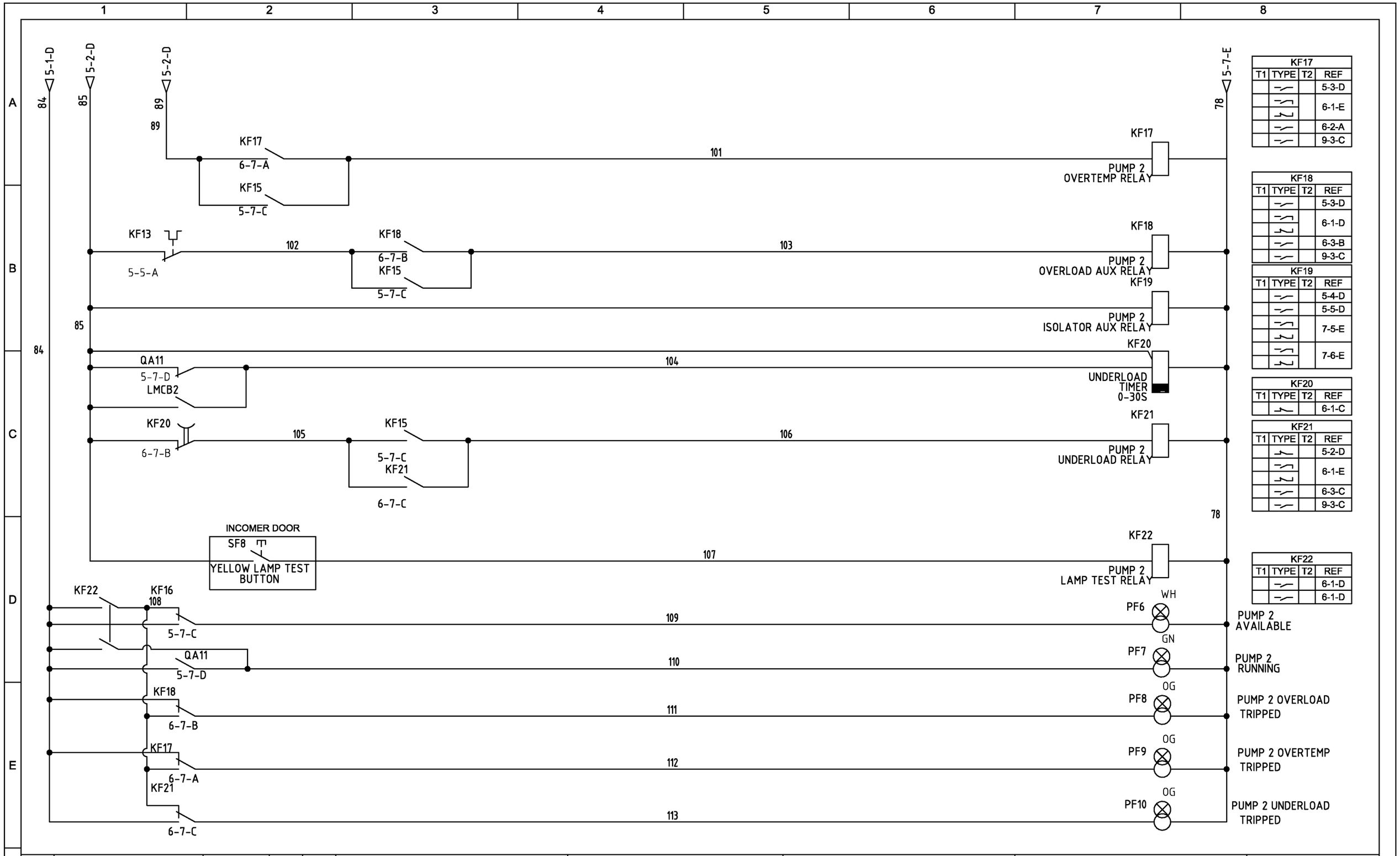


| KF17 | | | |
|---|---|---|---|
| T1 | TYPE | T2 | REF |
| | | | 5-3-D |
| | | | 6-1-E |
| | | | 6-2-A |
| | | | 9-3-C |

| KF18 | | | |
|---|---|---|---|
| T1 | TYPE | T2 | REF |
| | | | 5-3-D |
| | | | 6-1-D |
| | | | 6-3-B |
| | | | 9-3-C |

| KF19 | | | |
|---|---|---|---|
| T1 | TYPE | T2 | REF |
| | | | 5-4-D |
| | | | 5-5-D |
| | | | 7-5-E |
| | | | 7-6-E |

| KF20 | | | |
|---|---|---|---|
| T1 | TYPE | T2 | REF |
| | | | 6-1-C |

| KF21 | | | |
|---|---|---|---|
| T1 | TYPE | T2 | REF |
| | | | 5-2-D |
| | | | 6-1-E |
| | | | 6-3-C |
| | | | 9-3-C |

| KF22 | | | |
|---|---|---|---|
| T1 | TYPE | T2 | REF |
| | | | 6-1-D |
| | | | 6-1-D |

| Rev | Description | Date | Drn | Apprv |
|---|---|---|---|---|
| A | FIRST ISSUE | 26/03/2019 | SMH | SMH |

Client Name
Bovis Homes, Southern Home Counties

Title SFA7 & SOUTHERN WATER SPEC PUMP 2 STARTER

Drawn By JH

Project Code PR10869

Drawing No PR10869

gemini control systems ltd
designers and manufacturers

GEMINI CONTROL SYSTEMS LTD
TEL: 0844 800 4250
FAX: 0844 800 4251
WWW.GEMINI-CONTROLS.COM

interface ISO 9001 CERTIFICATION

Site
Burndell Road, Yapton

PDAS
Pump Design and Services Ltd

This document may not, without our permission, be copied, shown or handed out to competitors or any other unauthorised persons
Copyright Protected

Sheet No
6 of 13

GC00025/C - 11/1/19

ARUN DISTRICT COUNCIL Y/101/19/DOC

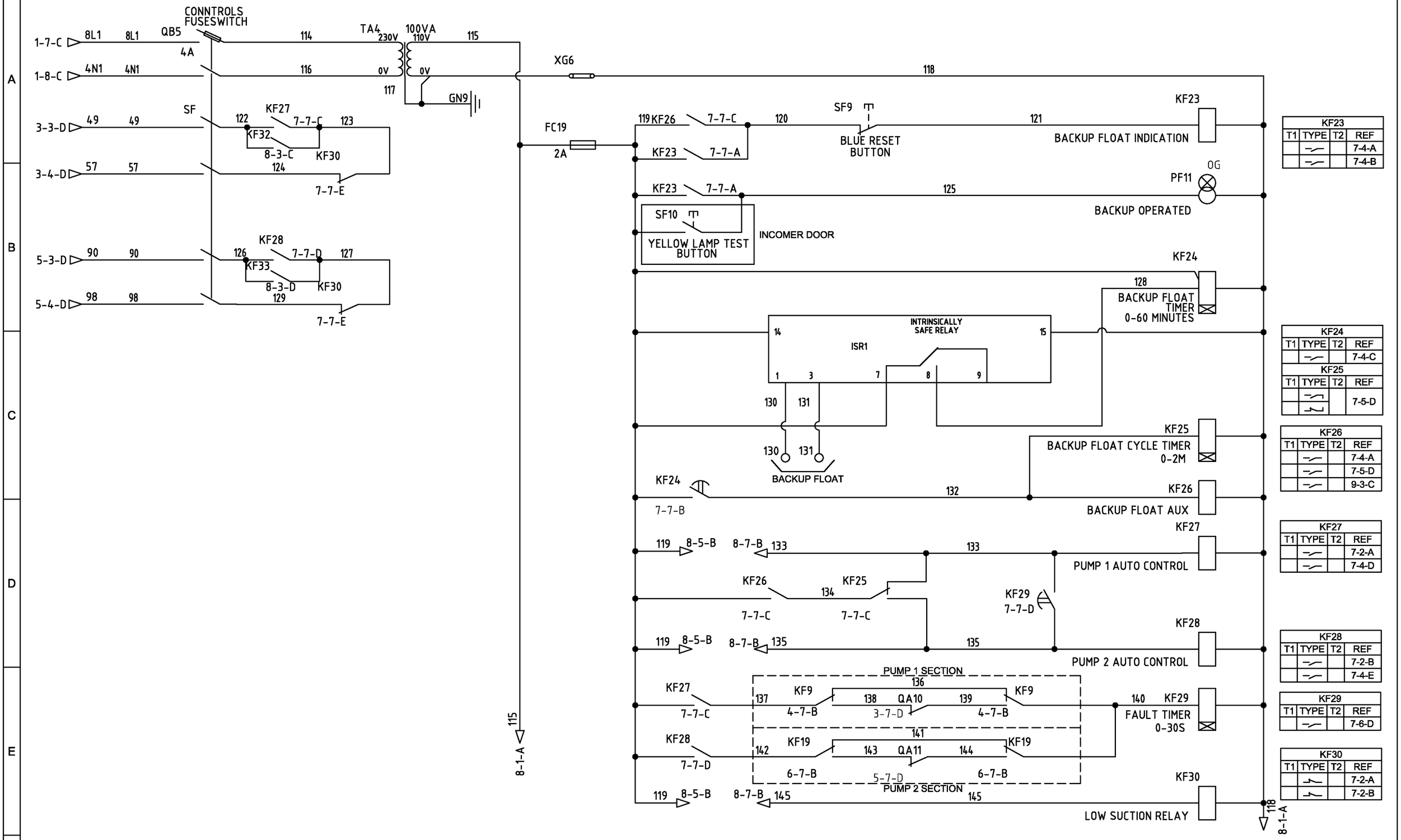


| KF23 | | | |
|---|---|---|---|
| T1 | TYPE | T2 | REF |
| | | | 7-4-A |
| | | | 7-4-B |

| KF24 | | | |
|---|---|---|---|
| T1 | TYPE | T2 | REF |
| | | | 7-4-C |

| KF25 | | | |
|---|---|---|---|
| T1 | TYPE | T2 | REF |
| | | | 7-5-D |

| KF26 | | | |
|---|---|---|---|
| T1 | TYPE | T2 | REF |
| | | | 7-4-A |
| | | | 7-5-D |
| | | | 9-3-C |

| KF27 | | | |
|---|---|---|---|
| T1 | TYPE | T2 | REF |
| | | | 7-2-A |
| | | | 7-4-D |

| KF28 | | | |
|---|---|---|---|
| T1 | TYPE | T2 | REF |
| | | | 7-2-B |
| | | | 7-4-E |

| KF29 | | | |
|---|---|---|---|
| T1 | TYPE | T2 | REF |
| | | | 7-6-D |

| KF30 | | | |
|---|---|---|---|
| T1 | TYPE | T2 | REF |
| | | | 7-2-A |
| | | | 7-2-B |

| Rev | Description | Date | Drn | Apprv |
|---|---|---|---|---|
| A | FIRST ISSUE | 26/03/2019 | SMH | SMH |

Client Name
Bovis Homes, Southern Home Counties

Title SFA7 & SOUTHERN WATER SPEC COMMON CONTROLS

Drawn By JH

Project Code PR10869

Drawing No PR10869

gemini control systems ltd
designers and manufacturers

GEMINI CONTROL SYSTEMS LTD
TEL: 0844 800 4250
FAX: 0844 800 4251
WWW.GEMINI-CONTROLS.COM

interface ISO 9001 CERTIFICATION

Site
Burndell Road, Yapton

PDAS
Pump Design and Services Ltd

This document may not, without our permission, be copied, shown or handed out to competitors or any other unauthorised persons
Copyright Protected

Sheet No
7 of 13

GCD0025/C - 11/1/19

ARUN DISTRICT COUNCIL Y/101/19/DOC

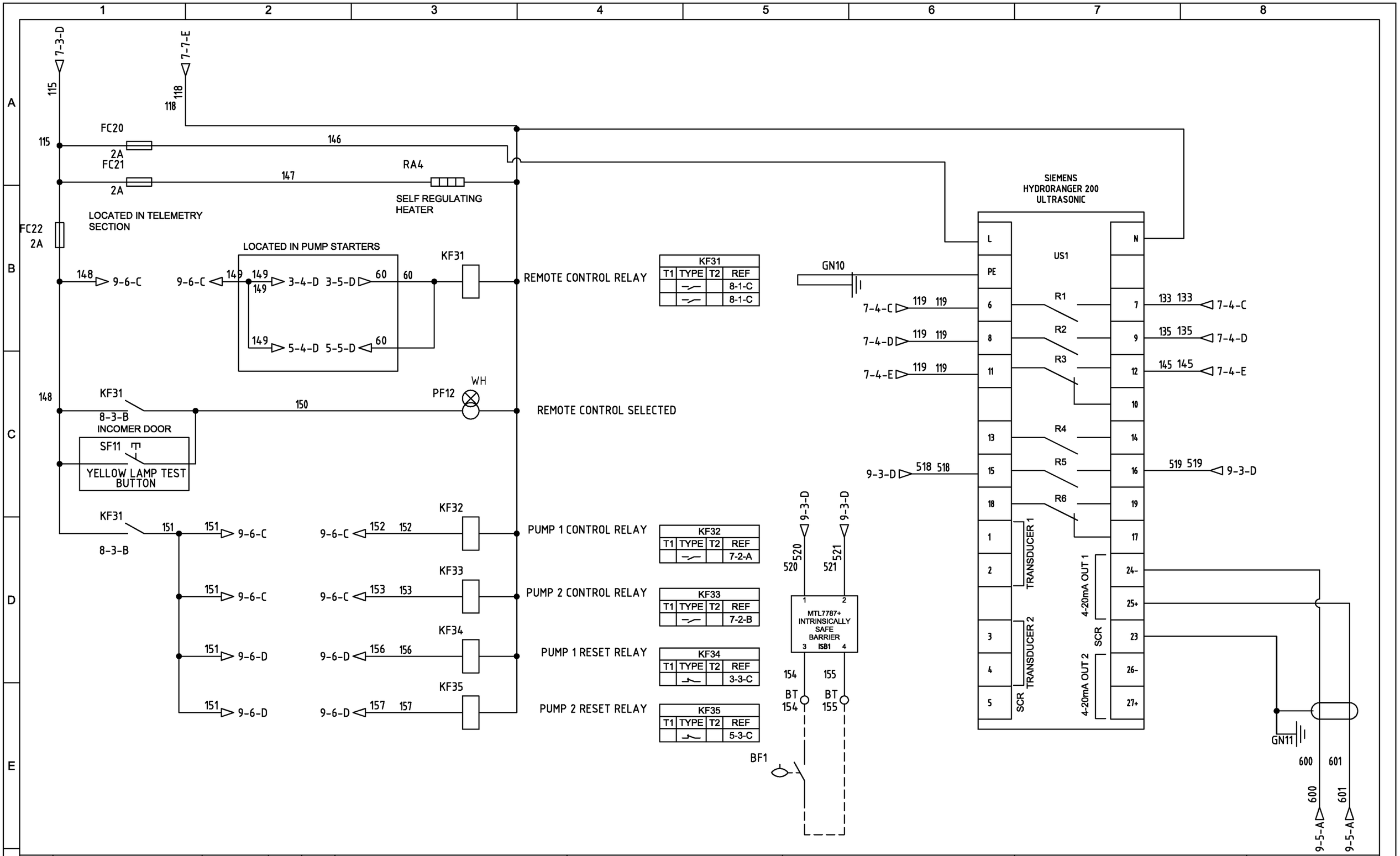


| Rev | Description | Date | Drn | Apprv |
|---|---|---|---|---|
| A | FIRST ISSUE | 26/03/2019 | SMH | SMH |

Client Name
Bovis Homes, Southern Home Counties

Title SFA7 & SOUTHERN WATER SPEC COMMON CONTROLS

Drawn By JH

Project Code PR10869

Drawing No PR10869

gemini control systems ltd
designers and manufacturers

GEMINI CONTROL SYSTEMS LTD
TEL: 0844 800 4250
FAX: 0844 800 4251
WWW.GEMINI-CONTROLS.COM

interface ISO 9001 CERTIFICATION

Site
Burndell Road, Yapton

PDAS
Pump Design and Services Ltd

This document may not, without our permission, be copied, shown or handed out to competitors or any other unauthorised persons
Copyright Protected

Sheet No
8 of 13

GCD0025/C - 11/1/19

ARUN DISTRICT COUNCIL Y/101/19/DOC

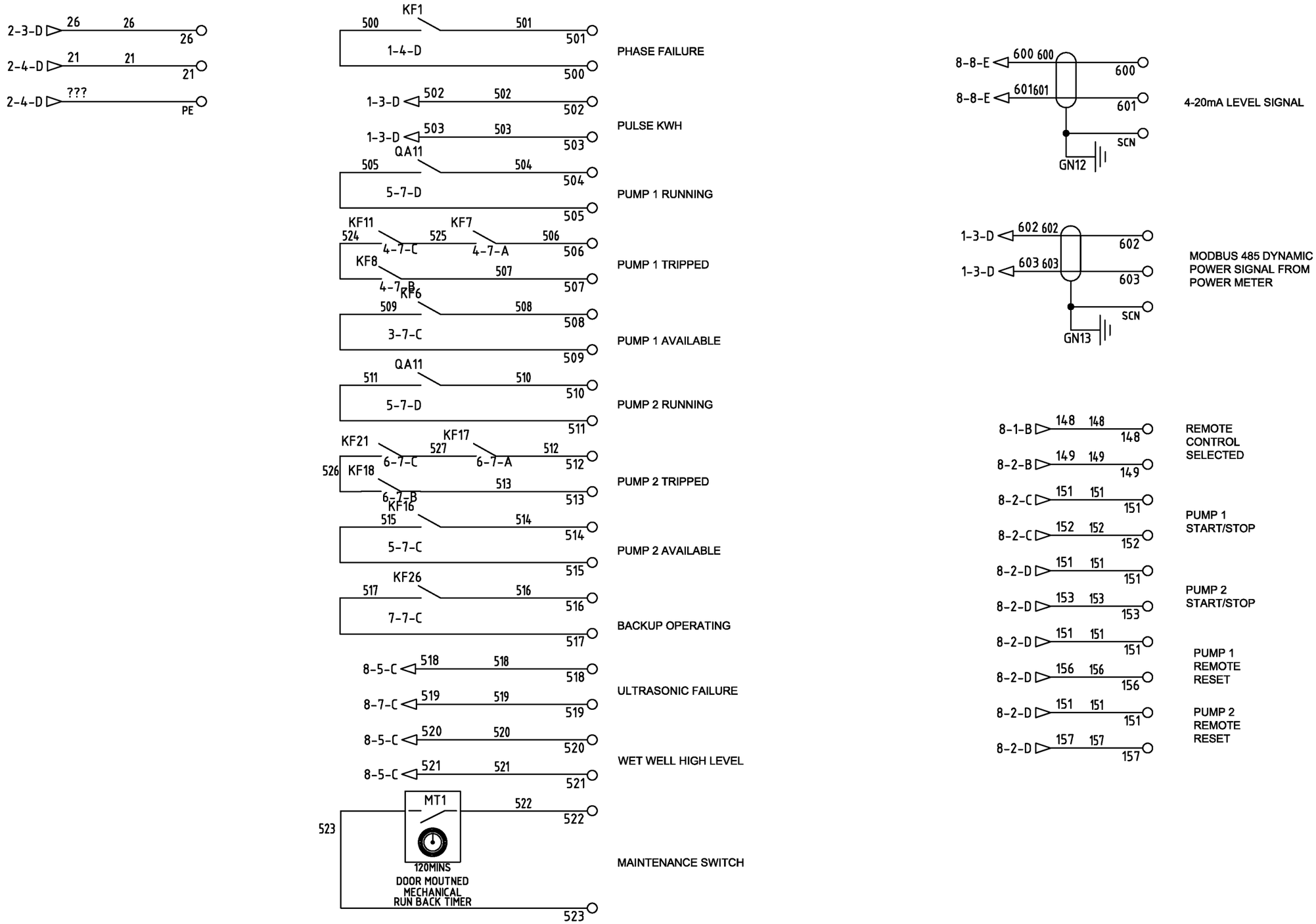


| Rev | Description | Date | Drn | Apprv |
|---|---|---|---|---|
| A | FIRST ISSUE | 26/03/2019 | SMH | SMH |

Client Name
Bovis Homes, Southern Home Counties

Title SFA7 & SOUTHERN WATER SPEC
TELEMETRY SECTION

Drawn By: JH
Project Code: PR10869
Drawing No PR10869

gemini control systems ltd
designers and manufacturers

GEMINI CONTROL SYSTEMS LTD
TEL: 0844 800 4250
FAX: 0844 800 4251
WWW.GEMINI-CONTROLS.COM

interface ISO 9001 CERTIFICATION

Site
Burndell Road, Yapton

PDAS
Pump Design and Services Ltd

This document may not, without our permission, be copied, shown or handed out to competitors or any other unauthorised persons
Copyright Protected

Sheet No
9 of 13

GCD0025/C - 11/1/19

ARUN DISTRICT COUNCIL Y/101/19/DOC

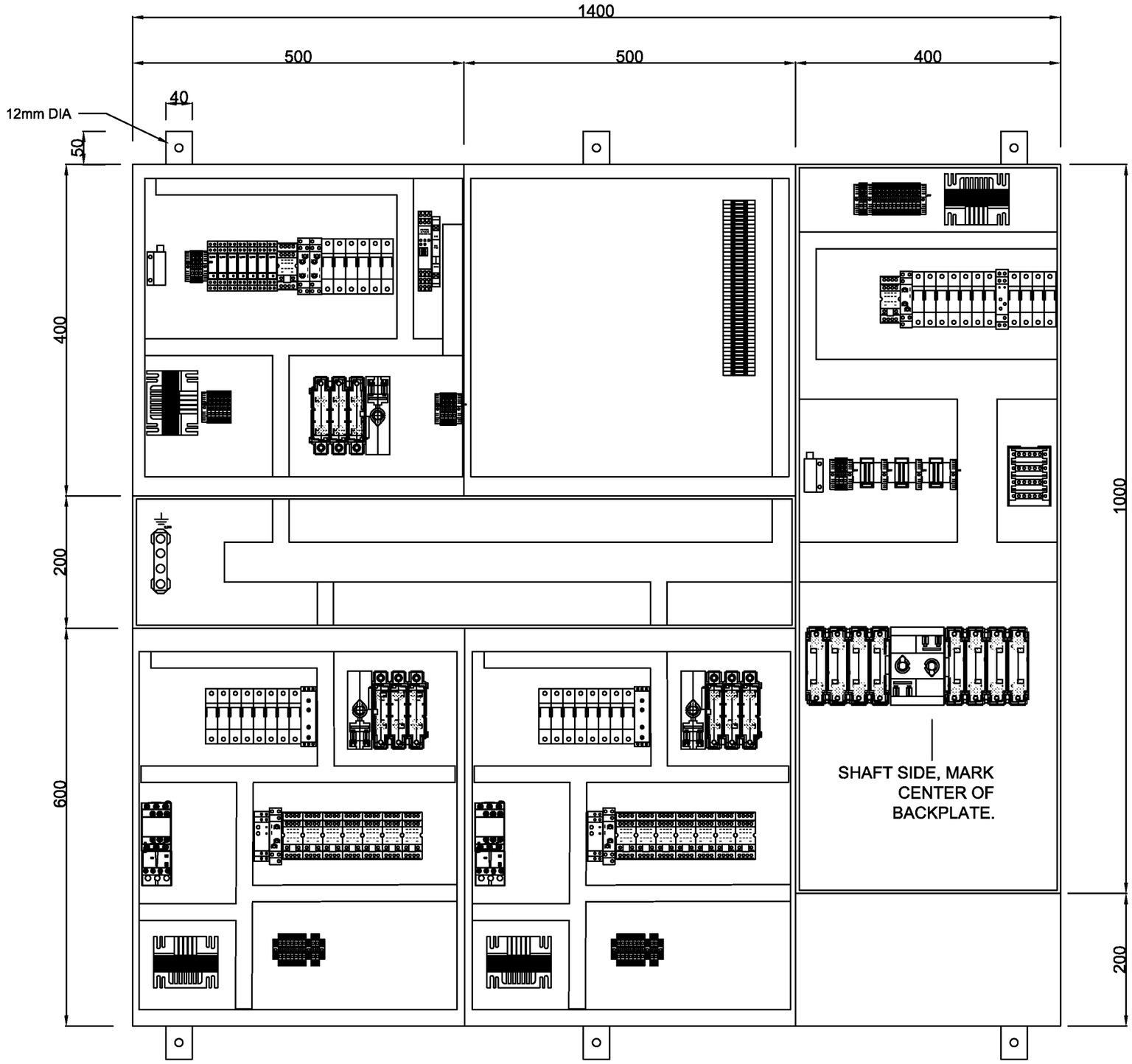


| Rev | Description | Date | Drn | Apprv |
|---|---|---|---|---|
| A | FIRST ISSUE | 26/03/2019 | SMH | SMH |

Client Name
Bovis Homes, Southern Home Counties

Title SFA7 & SOUTHERN WATER SPEC BACKPLATE GA

Drawn By: JH
Project Code: PR10869
Drawing No PR10869

gemini control systems ltd
designers and manufacturers

GEMINI CONTROL SYSTEMS LTD
TEL: 0844 800 4250
FAX: 0844 800 4251
WWW.GEMINI-CONTROLS.COM

interface ISO 9001 CERTIFICATION

Site
Burndell Road, Yapton

PDAS
Pump Design and Services Ltd

This document may not, without our permission, be copied, shown or handed out to competitors or any other unauthorised persons
Copyright Protected

Sheet No
10 of 13

GCD0025/C - 11/1/19

ARUN DISTRICT COUNCIL Y/101/19/DOC

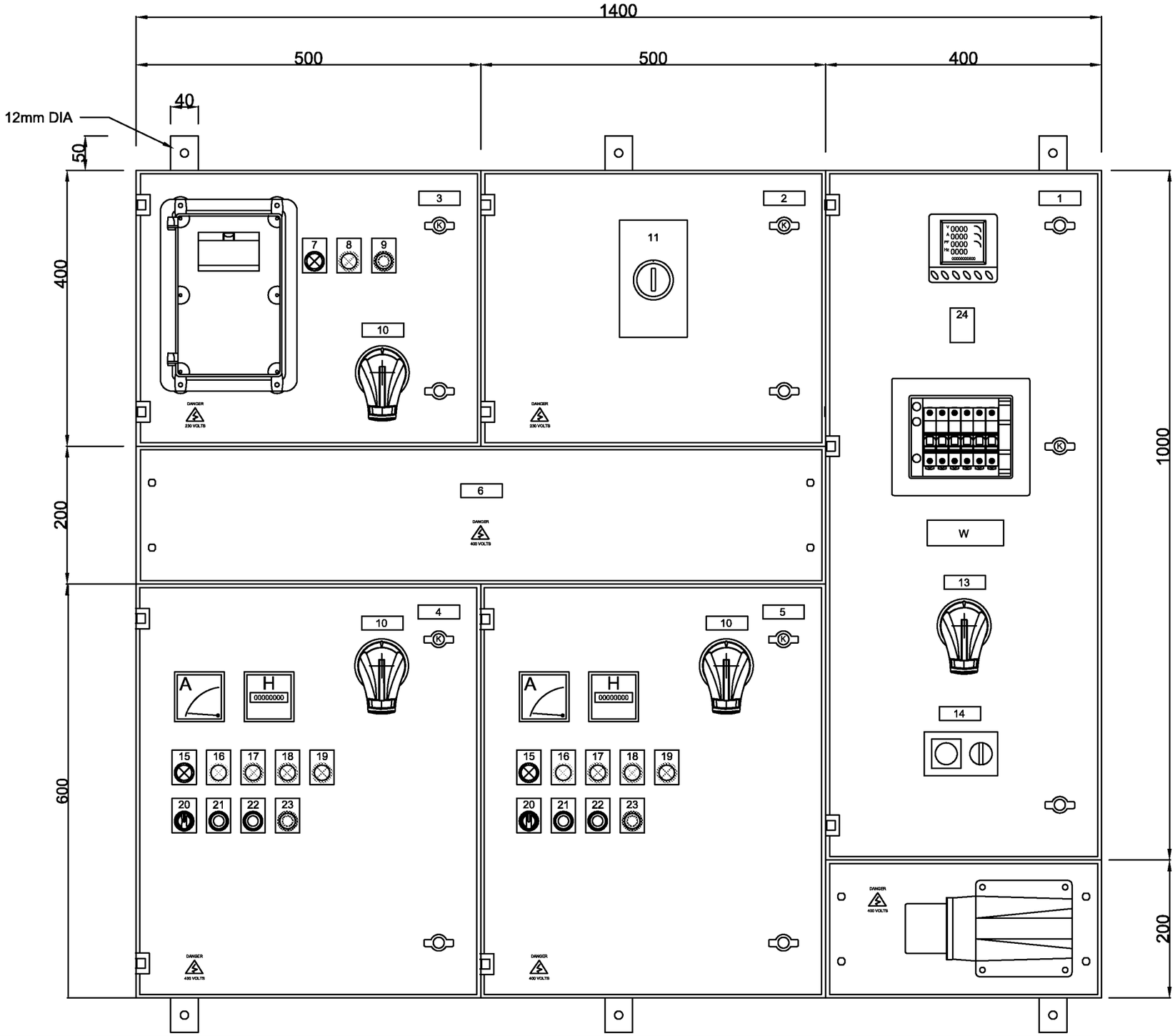


LABEL INSCRIPTIONS

1 INCOMER
2 TELEMETRY
3 CONTROL
4 PUMP 1
5 PUMP 2
6 CABLEWAY
7 REMOTE CONTROL SELECTED
8 FLOAT BACKUP
9 BACKUP FLOAT RESET
10 ISOLATOR
11 IN MAINTENANCE (MECH TIMER)
12 CONTROL SUPPLY AVAILABLE
13 MAINS OFF GENERATOR
14 230V ISOLATED SOCKET
15 PUMP AVAILABLE
16 PUMP RUNNING
17 OVERTEMP TRIPPED
18 OVERLOAD TRIPPED
19 PUMP UNDERLOAD
20 HAND OFF AUTO
21 START
22 STOP
23 RESET
24 LAMP TEST
W RCD TEST WARNING LABEL

Control Panel
Fully Welded Form 4 Construction
Mild Steel, 2mm thick
IP54 - Colour 18-E-51,
Semi Gloss Finish
Black hinges and locks
Gland plates to be galvanised

| Rev | Description | Date | Drn | Apprv |
|---|---|---|---|---|
| A | FIRST ISSUE | 26/03/2019 | SMH | SMH |

Client Name
Bovis Homes, Southern Home Counties

Title SFA7 & SOUTHERN WATER SPEC PANEL GA

Drawn By JH

Project Code PR10869

Drawing No PR10869

gemini control systems ltd
designers and manufacturers

GEMINI CONTROL SYSTEMS LTD
TEL: 0844 800 4250
FAX: 0844 800 4251
WWW.GEMINI-CONTROLS.COM

interface ISO 9001 CERTIFICATION

Site
Burndell Road, Yapton

PDAS
Pump Design and Services Ltd

This document may not, without our permission, be copied, shown or handed out to competitors or any other unauthorised persons
Copyright Protected

Sheet No
11 of 13

GCD0025/C - 11/1/19

ARUN DISTRICT COUNCIL Y/101/19/DOC

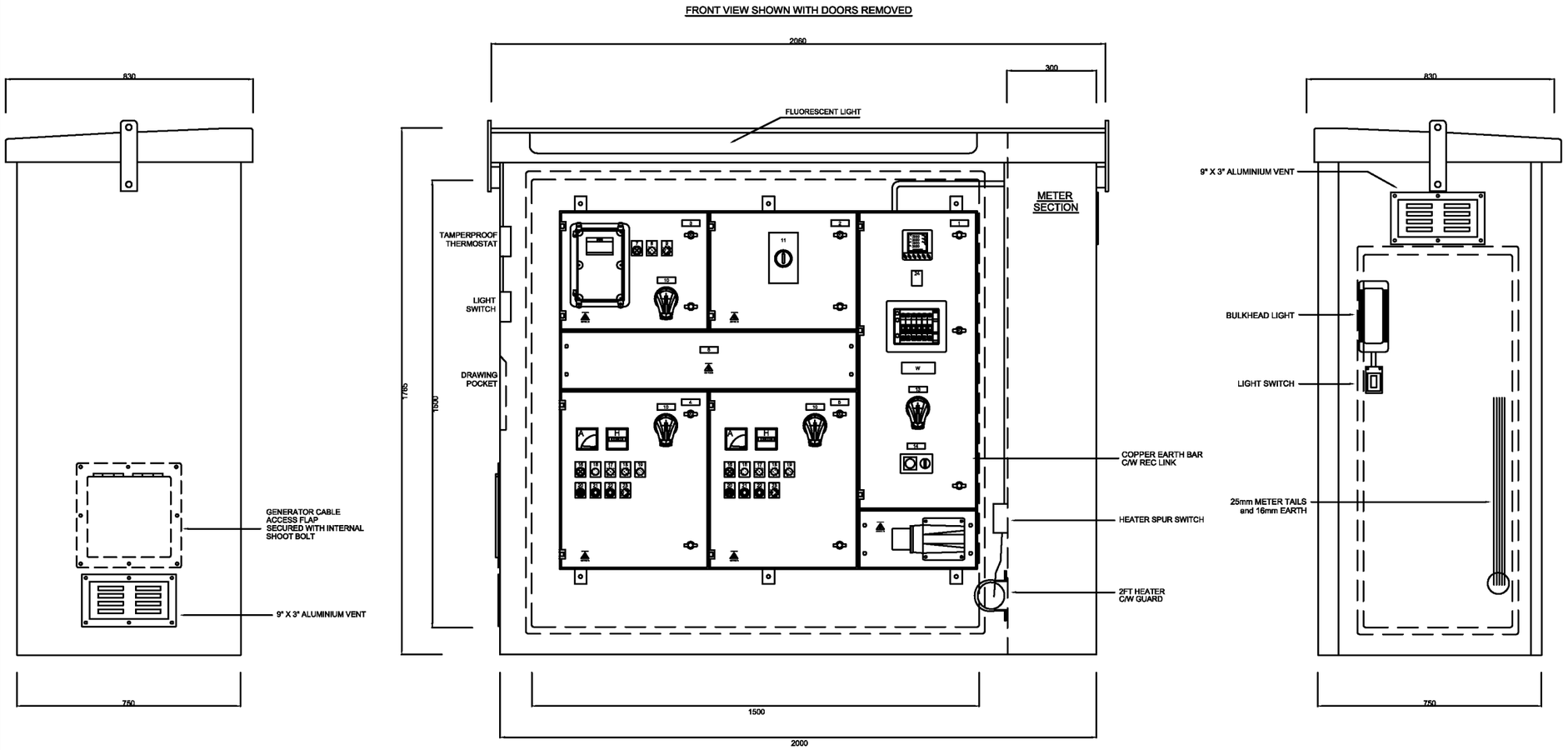


KIOSK LABELS:

**WARNING ISOLATE MAIN SUPPLY** (150mmx 75mm) shall
be positioned on the control panel inside kiosk
**ENSURE PUMPS** (300mm x 200mm) shall be positioned
externally on the kiosk doors

KIOSK SPECIFICATION:

7th Edition CONSTRUCTION / SPECIFICATION
1 Pair double doors and a single door with stainless steel hinges and stainless steel tamper proof fixings.
The clear opening of the double doors is 1800 mm wide x 1500 mm high.
2 No Stainless steel shoot bolts to second opening door leaf.
1 No Yale cylinder rim lock sealing the doors to IP55.
2 No Stainless steel self locking stays.
1 No GRP / 18 mm Core / GRP partition to form two compartments.
The clear

| Rev | Description | Date | Drn | Apprv |
|---|---|---|---|---|
| A | FIRST ISSUE | 26/03/2019 | SMH | SMH |

Client Name
Bovis Homes, Southern Home Counties

Title SFA7 & SOUTHERN WATER SPEC KIOSK GA

Drawn By JH

Project Code PR10869

Drawing No PR10869

gemini control systems ltd
designers and manufacturers

GEMINI CONTROL SYSTEMS LTD
TEL: 0844 800 4250
FAX: 0844 800 4251
WWW.GEMINI-CONTROLS.COM

interface ISO 9001 CERTIFICATION

Site
Burndell Road, Yapton

PDAS
Pump Design and Services Ltd

This document may not, without our permission, be copied, shown or handed out to competitors or any other unauthorised persons
Copyright Protected

Sheet No
12 of 13

GCD0025/C - 11/1/19

ARUN DISTRICT COUNCIL Y/101/19/DOC

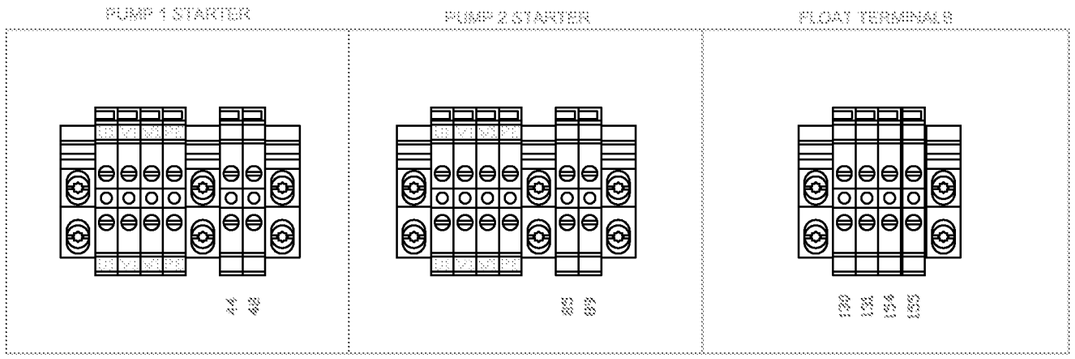


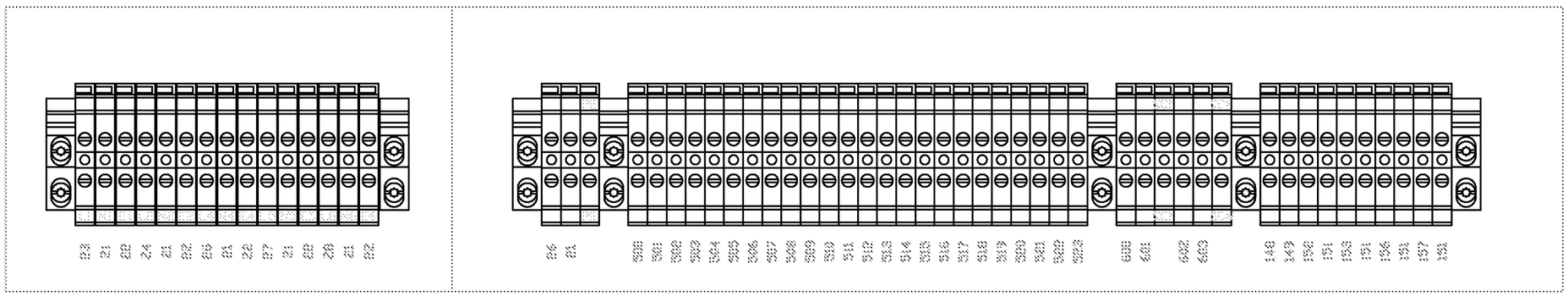


| Rev | Description | Date | Drn | Apprv |
|---|---|---|---|---|
| A | FIRST ISSUE | 26/03/2019 | SMH | SMH |

Client Name
Bovis Homes, Southern Home Counties

Title SFA7 & SOUTHERN WATER SPEC TERMINAL FOOTPRINTS

Drawn By JH

Project Code PR10869

Drawing No PR10869

gemini control systems ltd
designers and manufacturers

GEMINI CONTROL SYSTEMS LTD
TEL: 0844 800 4250
FAX: 0844 800 4251
WWW.GEMINI-CONTROLS.COM

interface ISO 9001 CERTIFICATION

Site
Burndell Road, Yapton

PDAS
Pump Design and Services Ltd

This document may not, without our permission, be copied, shown or handed out to competitors or any other unauthorised persons
Copyright Protected

Sheet No
13 of 13

GC00025/C - 11/1/19

ARUN DISTRICT COUNCIL Y/101/19/DOC