ELEVATION

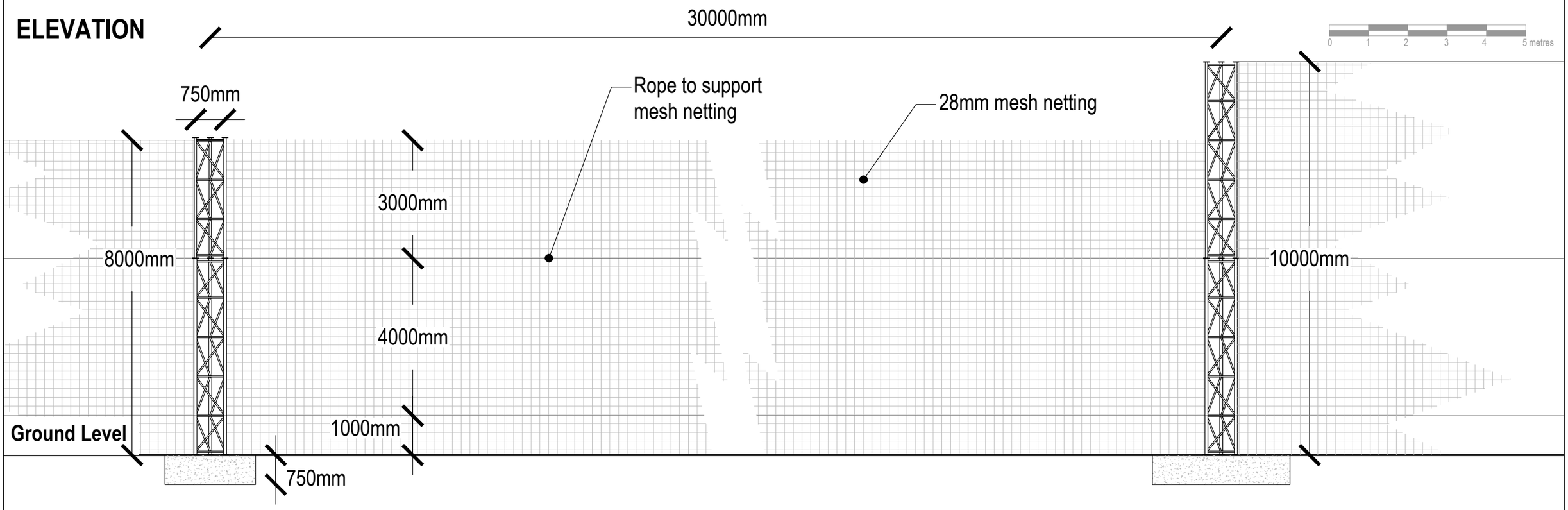

PLAN VIEW

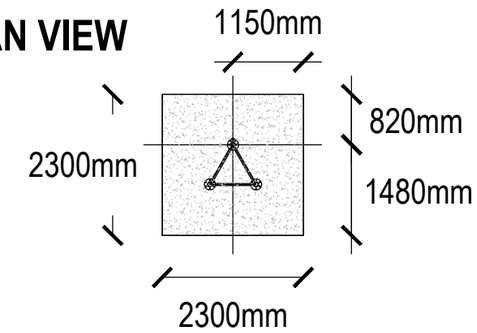

Typical footing detail (6-8m high fencing);
Exact details to be confirmed by specialist contractor.

Precedent image for supplier (AJW Construction/Hi-Nets)

Fencing Steelwork Support:
To be constructed at intervals of 30m maximum and at each end (subject to specialist supplier design).

-NB:- Posts to be painted black

Notes:
1. For proposed extent of fencing refer to dwg CSA/3823/109-110

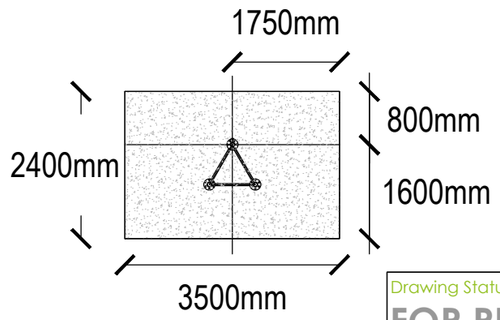

Typical footing detail (10m high fencing);
Exact details to be confirmed by specialist contractor.

NB;
The extent and height of the golf net fencing will be determined by a specialist contractor. Fencing heights estimated to range between 6000mm and 10000mm.

Rev	Date	By	Description
B	04/12/19	AL	Concrete footings revised to contractors specifications
A	22/10/19	AL	Fence heights amended to match layout proposals

Drawing Status
FOR PLANNING

CSA environmental
Dixies Barns, High Street,
Ashwell, Hertfordshire SG7 5NT
t 01462 743647
e ashwell@csaenvironmental.co.uk
w csaenvironmental.co.uk

Project	Land East of Tye Lane, Walberton		
Title	Golf Course Netting Indicative Detail		
Client	Linden Homes		
Scale	1:100 @ A3	Drawn	AL
Date	Sept 2019	Checked	GC
Drawing No.	CSA/3823/119	Rev	B

ARUN DISTRICT COUNCIL WA/95/19/DOC
© CSA Landscapes Ltd. Do not scale from this drawing. Refer to figured dimensions only.