Barton Hyett
Arboricultural Consultants

In association with:

CSA environmental

ARBORICULTURAL IMPACT ASSESSMENT AND METHOD STATEMENT

FOR

INSTALLATION OF A GOLF NET ASSOCIATED TO THE APPROVED CONSTRUCTION OF 175 DWELLINGS AND ASSOCIATED INFRASTRUCTURE

AT

LAND EAST OF TYE LANE, WALBERTON, ARUNDEL

ON BEHALF OF

LINDEN HOMES SOUTH

Barton Hyett Associates
Arboricultural Consultants

Unit 5E, Deer Park Business Centre, Eckington, Pershore, WR10 3DN
Tel: 01386 576161
Email: enquiries@barton-hyett.co.uk
Website: www.barton-hyett.co.uk

ARUN DISTRICT COUNCIL WA/95/19/DOC

Validation statement for LPA application registration

This report is submitted to Arun District Council to accompany a detailed planning application. The report contains arboricultural information relating to the proposed development on land east of Tye Lane.

For local planning authority (LPA) validation purposes, this report contains the following:

- An assessment of the impacts of the proposed development on the existing trees.
- An arboricultural method statement detailing appropriate methods of tree protection and any specific technical construction methods needed to implement the design proposals.

Barton Hyett
Arboricultural Consultants

CONTENTS:

Page No:

1.	INTRODUCTION	1
2.	DOCUMENTS AND INFORMATION PROVIDED	2
3.	STATUTORY PROTECTION	3
4.	DESCRIPTION OF PROPOSED DEVELOPMENT	5
5.	ARBORICULTURAL IMPACT ASSESSMENT (AIA)	6
6.	ARBORICULTURAL METHOD STATEMENT (AMS)	8

APPENDICES:

APPENDIX 1 – TREE SURVEY AND CONSTRAINTS PLAN

APPENDIX 2 - HI-NETS - FOUNDATION DETAIL

APPENDIX 3 - GENERAL RULES FOR TREE PROTECTION

APPENDIX 4 - SITE INDUCTION FORM

Reference	Date	Rev	Prepared	Checked	Comments/Revisions
C.2636	16.09.19	-	R. Hyett. BSc (Hons), MSc, MArborA, MICFor	P. Barton. BSc (Hons), MSc, MArborA	First issue
C.2636	24.10.19	A	R. Hyett. BSc (Hons), MSc, MArborA, MICFor	P. Barton. BSc (Hons), MSc, MArborA	Revised length of golf net

Institute of Chartered Foresters registered

Arboricultural ASSOCIATION Professional Member

Member No:PR03525

ARUN DISTRICT COUNCIL WA/95/19/DOC

1. INTRODUCTION

1.1 Barton Hyett Associates have been instructed by CSA Environmental Ltd on behalf of Linden Homes South, to assess the trees that could be affected by the development proposals on land east of Tye Lane, Walberton; hereafter referred to as 'the site'. This report, in compliance with BS5837:2012 '*Trees in relation to design, demolition and construction - recommendations*' is required to accompany the submission of a detailed planning application for the installation of a golf net.

1.2 The scope of the instruction was to assess the impact of the proposed development on the site's arboricultural resource and to produce the following:

- Arboricultural impact assessment
- Method statement

ARUN DISTRICT COUNCIL WA/95/19/DOC

2. DOCUMENTS AND INFORMATION PROVIDED

2.1 For the purposes of carrying out the assessment I have been provided with, and made reference to, the following information:

- Topographical survey - Walberton 3d Topo (08/2016)
- Pubic Open Space Landscape Proposals - CSA - CSA/3823/107 (rev I), 108 (rev G), 109 (Rev I) and 110 (rev G)
- Net detail (Including foundation detail) - CSA/3823_119_A_Golf Course Fencing Detail

3. STATUTORY PROTECTION

Statutory tree protection

3.1 I have contacted Arun District Council, the Local Planning Authority (LPA), and they have confirmed that the site is not located within a Conservation Area, although the site bounds a conservation area to the south west. They have also confirmed that many of the trees on, and adjacent to, the site are currently protected by Tree Preservation Order (TPO).

3.2 The TPO references relevant to the site are:

- TPO/WA/3/17, WALBERTON NO.3/68
- TPO/WA/1/16. TPO
- WALBERTON NO.2/72 (adjacent the site)
- WALBERTON NO.3/68 (adjacent the site).

3.3 Those trees believed to be protected by the Orders are show on the combined tree retention, removal and protection plan at APPENDIX 2. The following information is provided for advisory purposes.

3.4 Notwithstanding specific exemptions and in general terms, a TPO prevents the cutting down, uprooting, topping, lopping, wilful damage or wilful destruction of protected trees or woodlands without the prior written consent of the LPA.

3.5 Penalties for contravention of a TPO tend to reflect the extent of damage caused but can, in the event of a tree being destroyed, result in a fine of up to £20,000 if convicted in a Magistrates' Court, or an unlimited fine is the matter is determined by the Crown Court.

3.6 Any proposed tree works that are planned to be carried out on site must be carried out in accordance with the statutory controls outlined.

Statutory Wildlife Protection

3.7 Although preliminary visual checks from ground level of likely wildlife habitats are made at the time of surveying, detailed ecological assessments of wildlife habitats are not made by the arboriculturist and fall outside of the scope for this report.

3.8 Trees which contain holes, splits, cracks and cavities could potentially provide a habitat for protected species such as bats in addition to birds and small mammals. In some instances specialist ecological advice may be required. This may result in tree works being carried out following a detailed climbing inspection to the tree to ensure that protected species or their nests/roosts are not disturbed. If any are found, the site manager, owner or consulting

arboriculturist should be informed and appropriate action taken as recommended by the appointed Ecologist or the relevant Statutory Nature Conservation Organisation (SNCO): Natural England, Scottish Natural Heritage or Natural Resources Wales.

3.9 It is advised that tree/hedgerow works are carried out with the understanding that birds will generally nest in trees, hedges and shrubs between March and August. This time period only provides an indication of likely nesting times and as such diligence is required when undertaking tree works at *all* times.

3.10 Irrespective of the time of year, and other than any actions approved under General Licence, it is an offence to intentionally kill, injure or take any wild bird or to intentionally take, damage or destroy the nest or eggs of any wild bird. Ideally, tree operations should be avoided during the likely bird nesting period. However, any tree works should always only be carried out following a preliminary visual check of the vegetation.

3.11 For information, the Wildlife and Countryside Act 1981 (as amended), The Countryside and Rights of Way Act 2000 (as amended) and the Conservation of Habitat and Species Regulations 2010, form the basis of the statutory legislation for flora and fauna in England and Wales.

3.12 Any proposed tree works that are planned to be carried out on site must be carried out in accordance with any relevant statutory controls, outlined above.

4. DESCRIPTION OF PROPOSED DEVELOPMENT

4.1 The proposed development is for the installation of a golf net (of varying height; 10m, 8m and 6m) on the northern boundary of the site.

4.2 The fence will run on the line of the approved tree protection barrier (as shown on the approved Tree Protection Plan) and its location is shown on the accompanying soft landscape drawings.

4.3 The net will be supported by triangular section, lattice towers that will be supported on reinforced pad foundations.

4.4 The image below shows the tree protection fence alignment in the western half of the proposed alignment of the golf net.

Photoview 1: Looking west along the site side of the northern boundary as of the 2nd August 2019. A limb emanating from T5 can be seen to the right of frame.

ARUN DISTRICT COUNCIL WA/95/19/DOC

5. ARBORICULTURAL IMPACT ASSESSMENT (AIA)

5.1 With reference to BS5837:2012 *'Trees in relation to design, demolition and construction'*, this AIA evaluates the direct and indirect effects of the proposals on the site's arboricultural resource.

5.2 The AIA considers the effects of any tree loss required to implement the design as well as any reasonably foreseeable potentially damaging activities proposed in the vicinity of retained trees.

Description of proposed arboricultural losses

5.3 No trees will require removal to allow the golf net to be installed.

Impacts on retained trees

Demolition and site clearance

5.4 No demolition or site clearance is required to aloe he prosed development to be implemented.

Tree works & Facilitation pruning

5.5 Some minor facilitation pruning in the form of lateral crown reduction may be required to a single tree. The tree in question is T5 (Lombardy poplar). It may be possible that the netting can be installed without the need for any pruning to be undertaken but in order to prevent future conflicts with the netting it will be necessary to reduce the southern lateral spread of T5 by approximately 2m to leave a southern crown spread of circa 5.5m. Given the species, this minor work will not have any long-term impact on its health or longevity.

Ground level changes

5.6 No ground level changes are required to allow the golf net to be installed.

Foundations

5.7 Reinforced pad foundations (2.9m by 2.9m and 750mm deep) are required to install the main section of golf netting. These will be installed at approximately 30m intervals and in the following locations:

- due south of G1, where the netting will start;
- In the gap between T2 and T3 (approximately 8m east of T3);
- To the south-west of T5;
- To the south of G2;

- To the south of the of the western end of G2
- To the south of the of the western end of G3
- Between G4 and T7
- Between G5 and T8

5.8 In addition, pad foundations are also required for a shorter section of fence further to the west. These will again be installed at approximately 30m intervals and in the following locations:

- Two pad foundations to the south of G8
- One pad foundation at the eastern end if G9

5.9 All foundations will be located outside the RPAs of retained trees and no significant impacts are anticipated, however, due to the close proximity to RPAs the installation of the foundation must be installed in accordance with an Arboricultural Method Statement (See section 6).

Soft landscaping

5.10 Some minor soft landscaping is proposed with the RPAs of retained trees - see approved site wide method statement report reference: *BHA_C.2636_AMS_May 2019*.

6. ARBORICULTURAL METHOD STATEMENT (AMS)

6.1 In relation to the installation of the golf net, it is anticipated that arboricultural working methods are likely to be quite straightforward. The main considerations are set out below.

- Pre-commencement site meeting
- Localised removal of tree protection barrier
- Facilitation pruning (if required)
- Foundation excavation (watching brief)
- Foundation concrete casting (watching brief if required)
- Tower and net installation.

Purpose of AMS

6.2 The aim of the AMS is to inform and guide the appointed contractor in order to prevent the golf net installation work impacting upon on retained trees. The overwhelming majority of the trees adjacent to the work area are protected by Tree Preservation Order (TPO). This AMS gives step-by-step guidance and specifications for works which have the potential to result in loss of, or damage to retained and protected trees.

6.3 General rules for tree protection relating to the content of this AMS are included at Appendix 3.

Key Contacts

- Project Arboriculturist - Richard Hyett (Barton Hyett Associates): 01386 576161
- Client Contact - Laura Humphries (Senior Planning Manager - Linden Homes): 01483 705108
- Arboricultural Officer - Mark Warwick (Arun District Council): 01903 737974

Key personnel and delegation of responsibilities

6.4 The Client, Linden Homes, shall hold overall responsibility for the project and shall appoint professionals and delegate responsibility in relation to the scheme of tree protection as follows:

ARUN DISTRICT COUNCIL WA/95/19/DOC

- Works Supervisor/Site Manager - shall hold responsibility to ensure that all key contractors and all other persons working on site have a responsibility to be aware of trees and to abide by tree protection procedures set out within the AMS.

- Project Arboriculturist shall be responsible for independently monitoring/supervising the effectiveness of tree protection at regular intervals and report all findings in writing back to the client, the project site manager and the local planning authority. They shall also be instructed to provide additional advice should unforeseen circumstances develop.

6.5 Other appointed individuals and their contact information shall be recorded as part of the on-site pre-commencement site meeting.

How the AMS must be used

6.6 The AMS must be referred to by the works supervisor and/or site manager during net installation work and in particular during works close to retained and protected trees. A copy of this document must therefore be kept available in the work area for quick and easy reference.

6.7 Where site operations have potential to result in more substantial impacts on retained trees, an arboricultural watching brief has been specified.

Site inductions

6.8 Prior to commencing relevant works on site, all site operatives must be briefed by the Project Arboriculturist in relation to site procedures and rules that relate to retained and protected trees as well as the content of the AMS. Site operatives shall sign to confirm that they understand and will abide by these requirements. The Project Arboriculturist shall retain copies of these site induction statements for future reference as may be necessary. A Site Induction form is provided at Appendix 4.

Sequence of Site Operations and Compliance Action Requirements

6.9 The AMS table below lists and describes the sequence of works that must be followed in order to minimise damage to retained trees.

Sequence of Site Operations and Compliance Action Requirements			
Work Stage	Task	Description	Compliance action
1	Pre-commencement site meeting	1. Must be attended by relevant project and site management and the net installation contractor. 2. Local Authority Tree Officer must be given 5 days' notice of the meeting in writing and be invited to attend. 3. Project arboriculturist to explain the content of the AMS to all parties and highlight that there are protected trees adjacent the work area.	1. Project Arboriculturist to confirm in writing to the Arun D.C Tree Officer (for inclusion on the planning file) that the meeting has taken place and who were the persons that were present.
2	Localised removal of tree protection barrier	1. Contractor to remove localised areas of tree protection barrier to establish working zone around foundations. 2. Contractor to reset the fencing around the north of the required working zone. 3. Project Arboriculturist to approve fencing before works commence.	1. Project Arboriculturist to be provided with photographs of realigned tree protection fencing. Project Arboriculturist to email to Arun D.C Tree Officer (for inclusion on the planning file) attaching suitable photographs to illustrate.
3	Facilitation pruning (if required)	1. Pruning works to be carried out in accordance with the approved specification. 2. All pruning cuts to be made in accordance with BS3998: 2010. 3. All arisings to be disposed of in line with the instructions of the Linden Homes site manager.	1. Project Arboriculturist to inspect works on next site visit to confirm works undertaken appropriately.
4	Foundation excavation (watching brief)	1. Contractor to carry out an initial trial trench excavation (3m long and 750mm deep) along northern edge of all four foundations. Each shall be excavated under a watching brief. Should any roots of significance be encountered the decision to adjust the pad location or prune the roots shall be taken (only envisaged as possible for foundation adjacent T5). 2. A small machinal excavator may be used for the work if it sits outside of RPAs and the protection fencing. The Project Arboriculturist will advise at the time if hand digging is required. 3. Once the presence of any encountered roots has been appropriately dealt with, the remainder of each of the foundation excavations (approx. 3m by 3m and 750mm deep) shall be completed under a watching brief.	1. Project Arboriculturist to provide watching brief on trial trench excavation and to advise on next steps accordingly. A photographic record of the work shall be kept. 3. Project Arboriculturist to email confirmation to the Arun D.C Tree Officer (for inclusion on the planning file) of how the final works progressed.
5	Foundation concrete casting (watching brief if required)	1. Each of the 4 excavations shall be lined with 1500-gauge DPM (or similar). All joints to be taped and the DPM secured in place at the top of the excavation. Project Arboriculturist to approve before the pouring of concrete begins. 2. Contractor to cast the reinforced foundation. Maintain a photographic record of the work and to forward this to the Project Arboriculturist. 3. Contractor to confirm the Project Arboriculturist that the works are complete.	1. Project Arboriculturist to approve lining of excavations and document for reporting. 3. Project Arboriculturist to email confirmation to the Arun D.C Tree Officer (for inclusion on the planning file) that the excavations were lined and the pads cast appropriately.
6	Tower and net installation.	1. The tower and net to be installed by MEWP (or similar) that is located south of the net alignment with plant machinery being outside of RPAs. 2. Contractor to maintain a photographic record of the work and to forward this to the Project Arboriculturist. 3. Contractor to confirm to the Project Arboriculturist that the works are complete.	1. Project Arboriculturist to review contractors photographic record and (upon completion of the work), forward to the Arun D.C Tree Officer for inclusion on the planning file.

APPENDIX 1

TREE SURVEY AND CONSTRAINTS PLAN

ARUN DISTRICT COUNCIL WA/95/19/DOC

Tree No	Species	RPA Radius M	RPA Area M	Category
T1	Hornbeam	3.8	46	B2
T2	Sugar maple	2	12	C2
T3	Rowan	1.8	10	C2
T4	Red Oak	4.3	59	B1
T5	Poplar	5.4	92	C2
T6	Poplar	4.2	55	C2
T7	Red oak	4.5	65	B1
T8	Cypress	1.3	5	C2
T9	Lime	4.7	69	B2
T10	Cherry plum (purple leaf)	2.4	18	B2
T11	Cherry	2.4	18	B2
T12	Sweet chestnut	4.2	55	B1
T13	Cherry	2.6	22	B2
T14	Pin oak	2.2	15	B1
T15	Whitebeam	2.3	16	B2
T16	Norway maple	2.4	18	B2
T17	Larch	2	13	B2
T18	Poplar	4.8	72	C2
T19	English oak	7.8	191	B1
T20	Field maple	6	113	B1
T21	Field maple	4.8	72	B2
T22	Sycamore	4.2	55	B2
T23	Holm oak	10.6	350	A1
T24	Monterey Pine	9	255	A2
T25	Lime	7.8	191	A1
T26	English oak	2.3	16	C2
T27	Field maple	2.3	16	C2
T28	English oak	14	619	A2
T29	Copper beech	4.8	72	B2
T30	Grey poplar	6.6	137	C2
T31	Lombardy poplar	3.8	46	C2
T32	Norway maple	4.8	72	B2
T33	English oak	2.4	18	B1
T34	Grey Poplar	3.6	41	C1
T35	Grey poplar	4.2	55	C2
T36	English oak	3	28	B2
T37	Lombardy poplar	5.4	92	B2
T38	Horse chestnut	12.8	518	A1
T39	English oak	1.7	9	A2
T40	English oak	15	707	A2
T41	Weeping willow	2.4	18	C2
T42	Silver birch	4.2	55	B1
G1	Cypress, oak, maple	2.4	18	C2
G2	Sycamore, ash	4.5	65	B2
G3	Hawthorn, hazel, elder	1.8	10	B2
G4	Sycamore	4.3	59	B2
G5	Sycamore	4.5	65	B2
G6	Hawthorn, elder	1.8	10	C2
G7	Lombardy poplar	4.8	72	B2
G8	Cypress	1.8	10	C2
G9	White willow	7.2	163	B2
G10	Poplar	4.2	55	C2
G11	Holly, laurel, holm oak, elder, sycamore	3.6	41	B2
G12	Sycamore, ash, hawthorn	4.2	55	B2
G13	Poplar, goat willow, holly	5.4	92	C2
G14	English elm	3	28	C2
G15	Field maple	3.3	35	B2
G16	Lombardy poplar	3.6	41	B2
G17	Lime, oak,	4.2	55	B2
G18	Hawthorn, elm	2.2	15	C2
G19	Grey Poplar, hybrid poplar, lombardy poplar	8.2	209	C2
G20	Lombardi poplar	3.8	46	C2
G21	Cherry	3	28	C2
G22	Norway maple, sycamore, poplar, ash, rowan,	4.8	72	B2
G23	English elm, hawthorn	1.3	5	C2
H1	English elm, hawthorn	1.3	5	C2
H2	Holly	1.5	7	B2
H3	Hawthorn	0.6	1	B2
H4	Hawthorn, ash, elder	1.1	4	C2

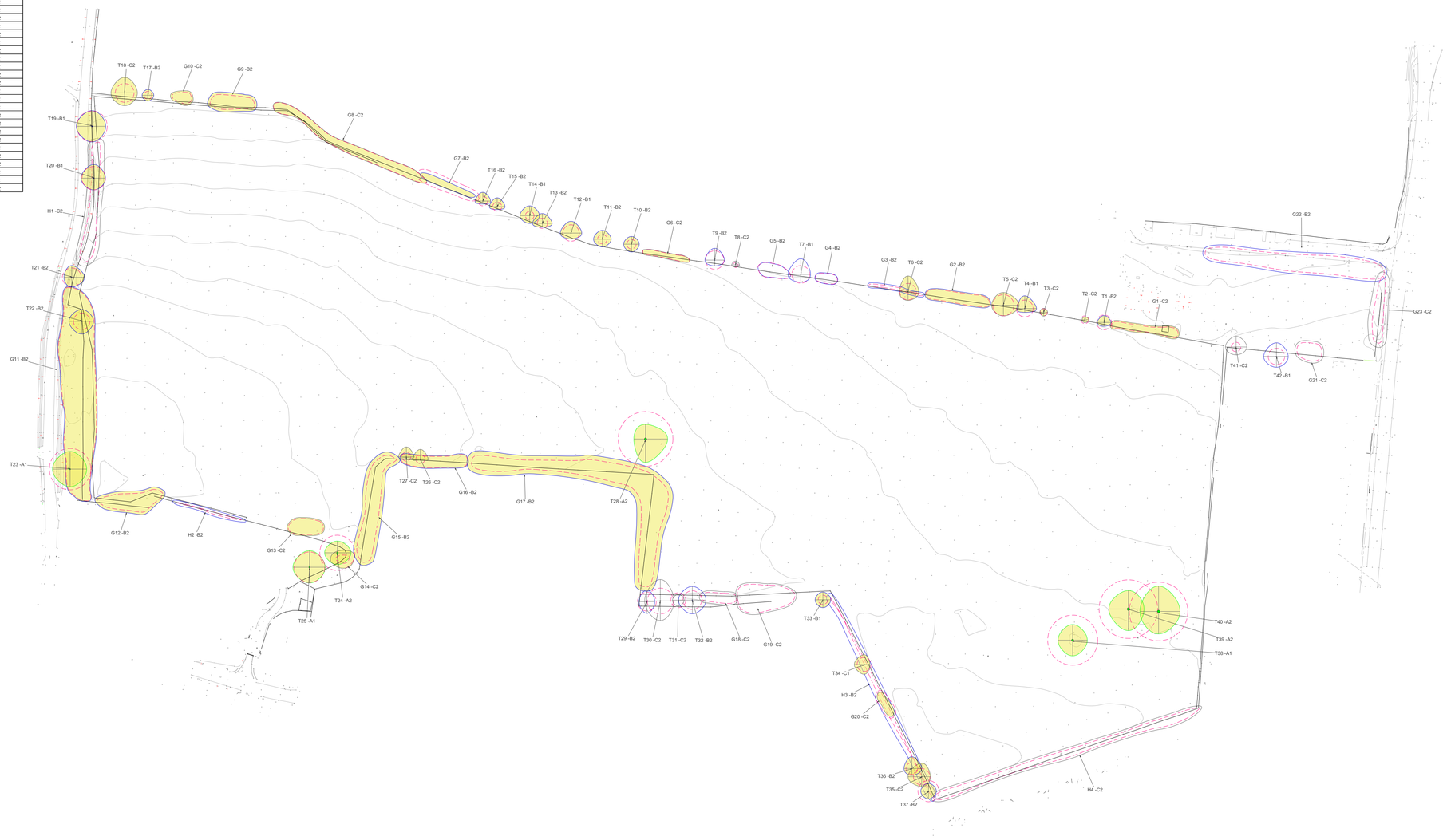

KEY BS 5837 : 2012 Categories

- Tree Category A - High Quality
- A Category - Hedgerow, Group, Woodland
- Tree Category B - Moderate Quality
- B Category - Hedgerow, Group, Woodland
- Tree Category C - Low Quality
- C Category - Hedgerow, Group, Woodland
- Tree Category U - Unsuitable for Retention
- U Category - Hedgerow, Group, Woodland
- Root Protection Area to BS 5837:2012
- Shrub Mass / Offsite Tree / OOS (Out of scope)
- Tree Preservation Order (TPO)

Where trees are considered to be subject to Tree Preservation Order more detailed checks will be required in some instances in order to confirm exact boundaries for the areas covered by each TPO

Note: The original of this drawing was produced in colour - a monochrome copy should not be relied upon.

N
GRID NORTH

0 10 20 30 40 50
Meters

PROJECT TITLE
Land East of Tye Lane, Walberton (C.2686)

DRAWING TITLE
Tree Survey & Constraints with Shading

SCALE	DRAWING NUMBER
1:1250 @ A1	**BHA_401_01**

DRAWN BY	APPROVED BY	REVISION	SHEET	DATE
DB	**RH**	**-**	**1/2**	**17/07/2018**

CLIENT
Linden Homes South

COORDINATE SYSTEM / DATUM
British National Grid / Newlyn Datum (AOD)

Crown copyright. All rights reserved.
2018 Emapsite Licence number 0100061264.
Ordnance Survey Copyright Licence number 100054267.

CSA environmental
Suite 1, Deer Park Business Centre, Eckington, Pershore, Worcs WR10 3DN
t 01386 751100 w csaenvironmental.co.uk
Barton Hyett Associates
Arboricultural Consultants

APPENDIX 2

HI-NETS - FOUNDATION DETAIL

ELEVATION

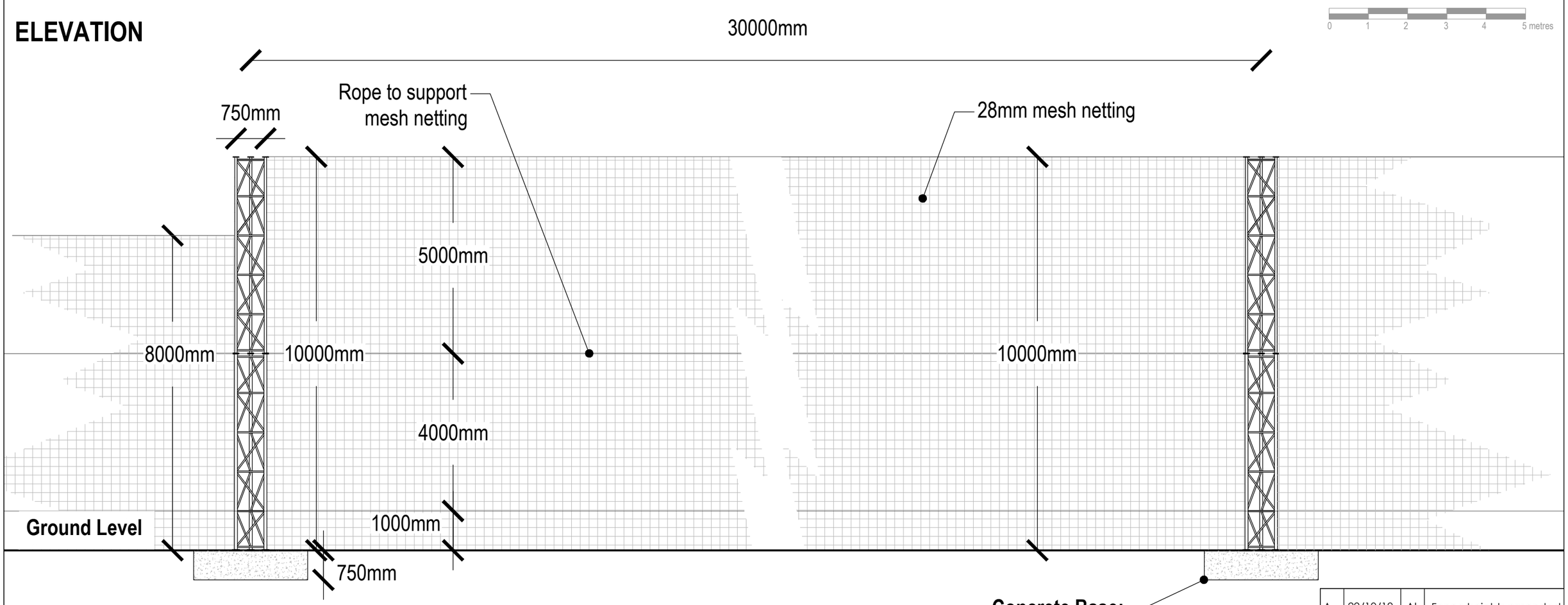

PLAN VIEW

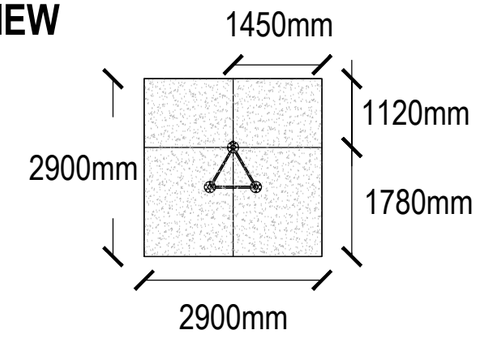

Typical footing deail;
Exact details to be confirmed by specialist contractor.

NB;
The extent and height of the golf net fencing will be determined by a specialist contractor. Fencing heights estimated to range between 6000mm and 10000mm.

Precedent image for supplier (AJW Construction/Hi-Nets)

Concrete Base:
2900 x 2900 x 750mm
to specialist contractors recommendations.

Fencing Steelwork Support:
To be constructed at intervals of 30m maximum and at each end (subject to specialist supplier design).

-NB:- Posts to be painted black

Notes:
1. For proposed extent of fencing refer to dwg CSA/3823/109-110

Rev	Date	By	Description
A	22/10/19	AL	Fence heights amended to match layout proposals

Drawing Status
FOR PLANNING

CSA environmental
Dixies Barns, High Street,
Ashwell, Hertfordshire SG7 5NT
t 01462 743647
e ashwell@csaenvironmental.co.uk
w csaenvironmental.co.uk

Project	Land East of Tye Lane, Walberton		
Title	Golf Course Netting Indicative Detail		
Client	Linden Homes		
Scale	1:100 @ A3	Drawn	AL
Date	Sept 2019	Checked	GC
Drawing No.	CSA/3823/119	Rev	A

© CSA Landscapes Ltd. Do not scale from this drawing. Refer to figured dimensions only.
ARUN DISTRICT COUNCIL WA/95/19/DOC

APPENDIX 3

GENERAL RULES FOR TREE PROTECTION

ARUN DISTRICT COUNCIL WA/95/19/DOC

ABBREVIATIONS USED

The following abbreviations and definitions apply in relation to this document:

- AIA – Arboricultural Impact Assessment
- AMS – Arboricultural Method Statement
- RPA – Root Protection Area
- CEZ – Construction Exclusion Zone
- TPP – Tree Protection Plan

INFORMATIVE - HOW TREE DAMAGE CAN OCCUR

Above the ground.

Damage can occur as a result of contacts between branches and/or tree trunks. This is often but not always associated with machine operations, groundworks excavations, teleporters, high sided vehicles and crane use. Other forms of above ground damage include fixings to trunk and unauthorised cutting back of branches.

Below the ground

It is often not appreciated that the majority of most tree roots are generally located within the top 600mm of the ground. On this basis it needs to be understood that damage to roots can occur in two ways:

- Root severance can occur as a result of, for example, soil stripping during site clearance or excavations.

- Root dieback and death can result from compaction of the soil. Compaction can occur as a result of vehicle weight, weight of stored materials or increased pedestrian access. Compaction crushes out soil pore space and prevents tree respiration from occurring (respiration requires gas exchange between the ground and the atmosphere). Compacted soil is denser and therefore inhibits/prevents any further new root growth.

The effects of these impacts can be disfiguring to a tree's appearance and also weaken a tree making it more liable to attack by pest and diseases. In addition, root damage or death results in corresponding decline above the ground with dieback occurring within the tree crown.

The effects of damage to trees generally take some time to become fully apparent. In many cases, damaged trees decline slowly after the completion of a new development, until they eventually need to be removed due to ill health.

Tree protection barriers and load distributing 'no-dig' paths are specified in order to prevent soil compaction from taking place.

GENERAL SITE RULES FOR TREE PROTECTION

Do not independently carry out any activity that is at odds with the site Scheme of Tree Protection.

In simple terms: do not carry out any work within any Construction Exclusion Zone (CEZ) without prior liaison with the Project Arboriculturist and written authorisation from the Local Planning Authority.

Within the CEZ:

- No mixing of cement
- No soil/turf stripping, raising/lowering of ground levels (unless advised), deposit or excavation of soil or rubble
- No excavations for services or installation of services
- No storage of materials, machinery fuel, chemicals or other materials of any other description
- No parking/use of tracked or wheeled machinery
- No siting of temporary structures including hard standing areas, portaloos, site huts
- No lighting of fires or disposal of liquids.

Fires on site should be avoided if possible. Where they are unavoidable, they must not be lit in a position where heat could damage foliage or branches. Fires must be a minimum of 20m from the trunk of any retained tree or the centre line of any hedgerow to be retained.

No signs, cables, fixtures or fittings of any other description shall be attached to any part of a retained tree

APPENDIX 4

SITE INDUCTION FORM

ARUN DISTRICT COUNCIL WA/95/19/DOC

Barton Hyett Associates
Arboricultural Consultants

TREE AWARENESS – SITE INDUCTION

SITE NAME:……..

DATE OF INDUCTION:…….

Trees are an important part of this development. Retained trees must be kept undamaged so that they can fully benefit the finished project well into the future. All persons working on this site have a responsibility to be aware of trees and to abide by tree protection procedures.

How trees can be damaged – think roots!

Above the ground – contacts and impacts with branches and trunk (machine operations eg teleporters, high-sided vehicles, crane use, fixings to trunk, unauthorised cutting back of branches)

Below the ground – root severance (eg soil stripping during site clearance, excavations) and root damage resulting from compaction of soil near trees (eg vehicles, pedestrian, storage of materials). Effects of root damage take time to become obvious, but will result in disfiguring dieback of leaves and branches, or even tree death.

Tree protection procedures

Provided that the simple steps are followed most tree protection is straightforward:

- Stay out of tree Construction Exclusion Zones (CEZs). These are the areas of ground surrounding retained trees that are protected by barriers. If you need to go into a CEZ, you must first gain authorisation from the Site Manager
- No construction activity of any description within CEZs, eg soil stripping, cement mixing, services installation, storage of materials etc
- No fires within 20m of trunk of any retained tree
- If authorised to work within a CEZ, work to the Arboricultural Method Statement, eg demolition, construction, landscaping works etc
- If damage occurs, inform the Site Manager.

ARUN DISTRICT COUNCIL WA/95/19/DOC

Remember

All trees on the site are protected by planning conditions. Many trees on the site may also be legally protected by Tree Preservation Order (TPO) or Conservation Area status

Planning Authority enforcement action needs to be avoided:

- 'Breach of Conditions' notices can prevent a site from being signed-off.
- 'Temporary Stop Notices' halt site operations and result in associated high costs.
- Wilful damage/destruction of TPO/Conservation Area trees can result in company and/or individual prosecutions - fines can me anything up to £20,000 (County Court fines can be higher). Remember that fines apply to the person committing the offence as well as the site owner and main contractors!

Be aware of tree protection and stick to the procedures. Tree protection is straightforward. If in doubt –ask!

I have received site induction in tree awareness and tree protection procedures

PRINT NAME: ……

SIGN: ……..

DATE: …….

ARUN DISTRICT COUNCIL WA/95/19/DOC