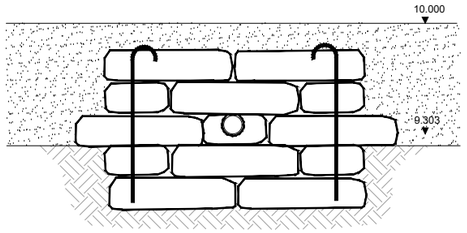

HW 3-6 HEADWALL SECTION
OUTFALL TO SIDE OF DITCH
(Scale 1:25)

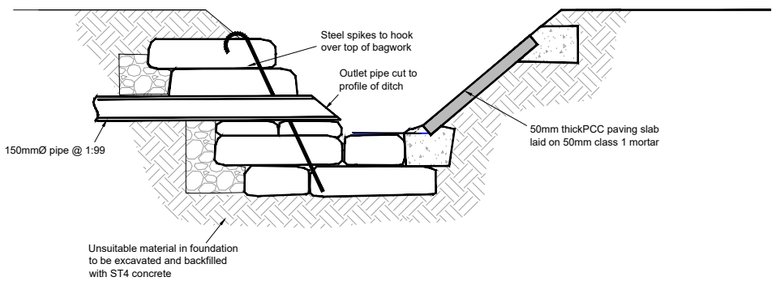

HW 3-6 HEADWALL SECTION
OUTFALL TO SIDE OF EXISTING DITCH
(Scale 1:25)

-250 0 250 500 750 1000mm
Scale 1:25

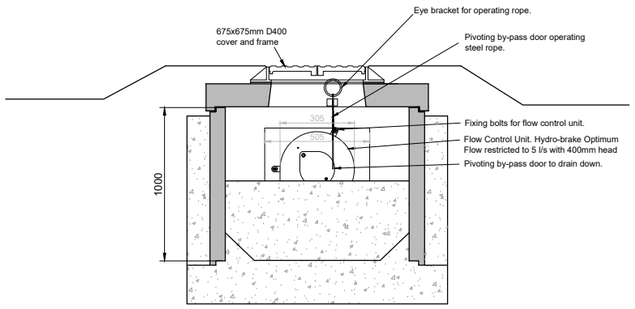

SECTION
(Scale 1:20)

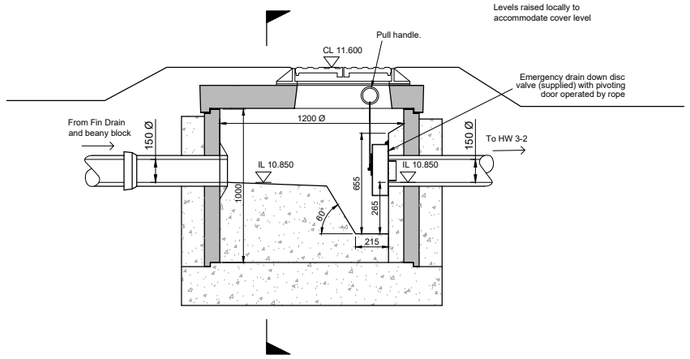

CTL-SHE-0086-3000-0750-3000
MANHOLE HB 3-1 - FLOW CONTROL VORTEX
(Scale 1:20)

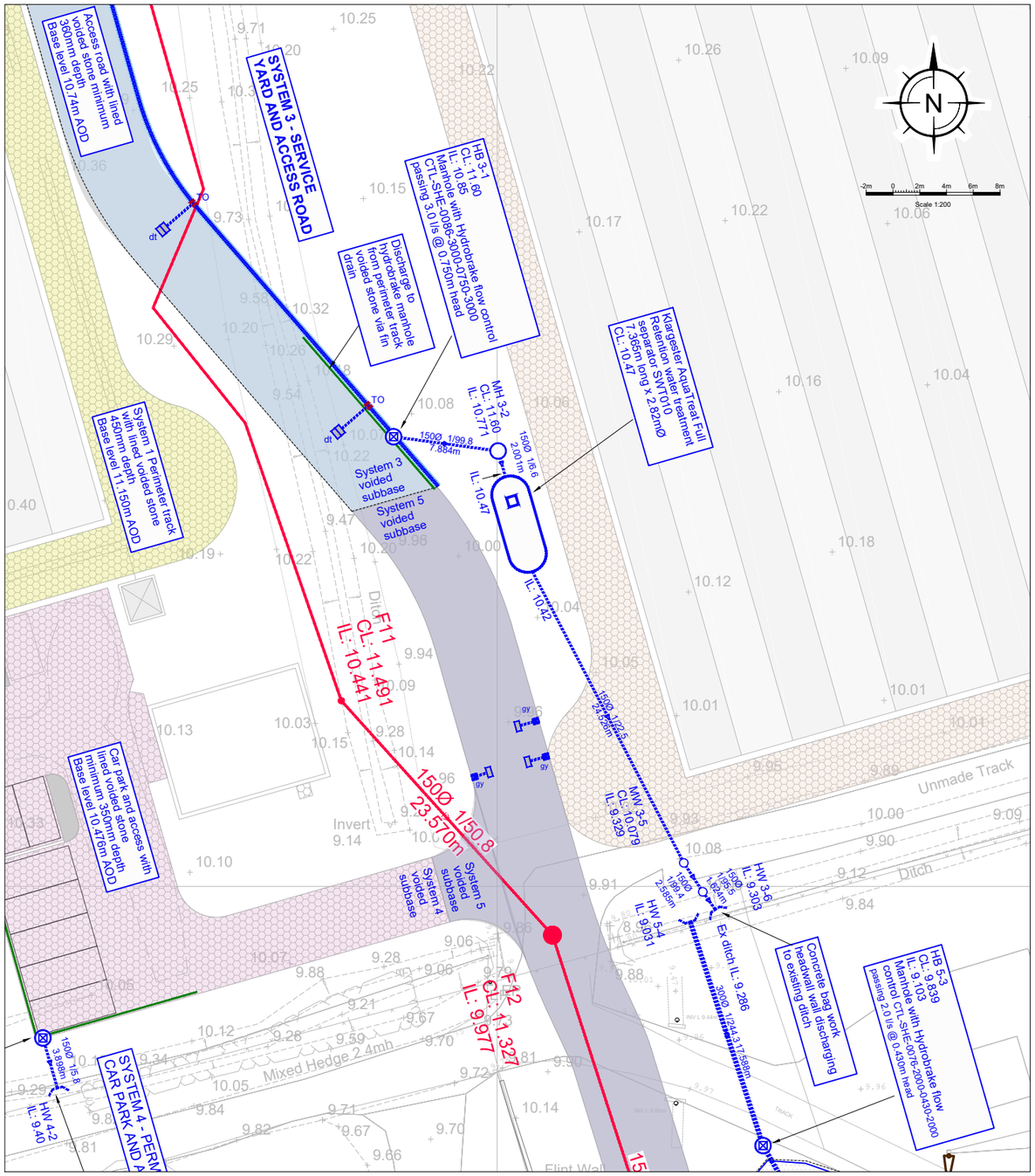

SYSTEM 3
PLAN
(Scale 1:200)

GENERAL NOTES:

1. All dimensions to be checked on site. All details and dimensions relating to sub-Contractors work must be checked and agreed between the sub-Contractor or supplier and the general Contractor.

2. This drawing is to be read in conjunction with all relevant Architect's and Engineer's drawings and specification.

3. The main Contractor is responsible for ensuring the stability of the structure whilst the works are in progress.

4. Any information given regarding existing underground services is given in good faith after consultation with the relevant authority. No liability is accepted by the Consultant and the main Contractor is responsible for obtaining and checking all information and taking due care and attention whilst undertaking the works.

DRAINAGE NOTES:

1. All adoptable pipes, bends and junctions shall be vitrified clay in accordance with the current version of BS EN 295-1, with flexible joints and kitemark certified.

2. All Adoptable sewers shall be in strict accordance with the SSG Appendix C - Design and Construction Guidance. Unless otherwise stated adoptable sewers shall be 150mm diameter and shall be laid in a class S bedding. Where the depth to soffit is less than 1.2m under a public highway or 0.9m elsewhere the pipe shall be laid with a class Z bedding.

3. All private building drainage shall be constructed in strict in accordance with the current version of BS EN 752:2017. Unless otherwise specified building drainage shall be 100mm diameter and shall be laid at a minimum gradient of 1 in 40 for foul drains and 1 in 80 for surface water drains. All building drains shall be laid in class B bedding unless otherwise specified.

4. Where a pipe is within 1m of a foundation the trench shall be filled with class GEN 3 concrete up to the lowest level of the foundation. Where the trench is further than 1m from the foundation, the trench shall be filled with class GEN 3 concrete to a level below the lowest level for the foundation equal to the distance from the foundation less 150mm. In both cases the pipe shall be bedded and surrounded in 150mm thick class GEN 3 concrete.

5. Where pipes, external to the structures, have a depth to soffit from ground level of less than 450mm they shall have a class GEN 3 concrete encasement (150mm thick). In all other cases the pipes shall be bedded and surrounded with 100mm thick granular material.

6. In any circumstances where pipes are bedded and surrounded in concrete flexible joints should be provided. Compressible boards (fibreboard or polystyrene) shall be provided at a maximum of 8m centres (coinciding with pipe joints). The boards shall be pre-cut to pipe diameter and to a height and width equal to the concrete cross section. A board thickness of 18mm for pipes up to 450mm nominal diameter and 36mm for pipes over 450mm nominal diameter.

7. All svps shall have rodding access plates fitted at their bases (ground floor level).

8. Where existing pipes are to be abandoned they shall be dug out together with any abandoned manholes.

9. Any discrepancy between the drawing and site should be reported immediately to the Engineer.

10. All manhole and chamber sizes are given as a minimum to meet the SSG Appendix C-Design and Construction Guidance

Notes

1. Bags shall be of Hessian or Canvas and shall be of a size to provide a wall thickness of 500mm

2. Concrete bagwork shall be to Clause 519 and be three quarter filled with 25mm slump ST4 concrete immediately prior to placing with the ends sewn.

3. The bags shall be placed in a modified Flemish bond so as to 'break joint' with the mouths away from the surface and be tamped into position to form a rectangular block

4. Extent of outlet protection to be the greater of 1500mm or pipe diameter + 1200mm spanning the outlet pipe.

5. Headwall design may need to be adjusted to on site conditions following approval from WSCC Inspector

6. For vehicluar crossings of ditches pipes shall be min 450mm diam and be set to invert of ditch. Ditch to be regraded to achieve satisfactory falls.

7. For H>600 appropriate vehicular or pedestrian containment shall be installed.

8. The nearest edge of any carriageway shall be set back at least H from the base of the ditch

9. All exposed pipework to be certified UV stable.

REV	DATE	INT	DESCRIPTION	CHK

Issue Status: FOR APPROVAL

The Civil Engineering Practice
11 Tungsten Building
George Street
Fishersgate
Sussex
BN41 1RA
01273 424424
reception@civil.co.uk
www.civil.co.uk

CLIENT: Agriculture Investments Ltd
PROJECT: Lower Farm, Yapton
TITLE: Construction Details
Headwalls
System 3

DRAWN	DATE	PROJECT NO.
M Pacifico	Nov 2024	23993
ENGINEER	CHECKED	ORG. No. / REV.
S Magowan		523 -
SCALE		
1:200, 1:25 @ A1		