N

INDICATIVE NORTH

NOTES

1. All dimensions in meters, unless stated otherwise,
2. Layout based on Topographical Survey and Landscape Architect's plans,
3. Drawing to be read in conjunction with all other relevant drawings

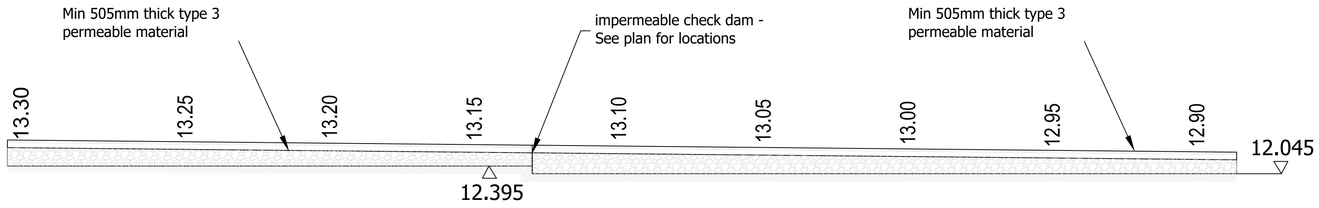

SECTION 1A
1:100

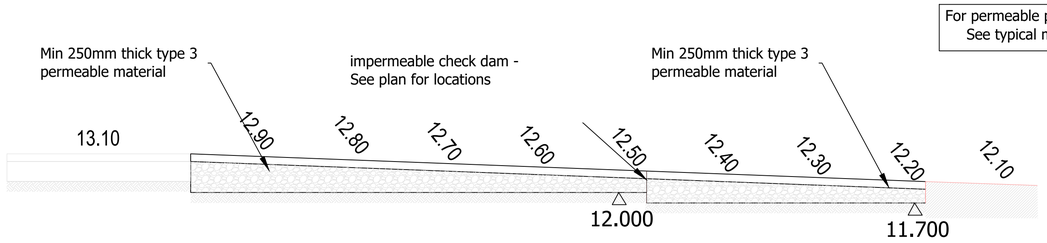

SECTION 1B
1:100

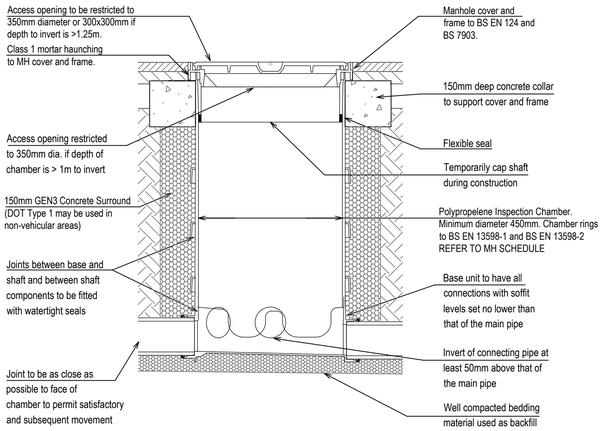

TYPICAL INSPECTION CHAMBER DETAIL - TYPE 3
1:10

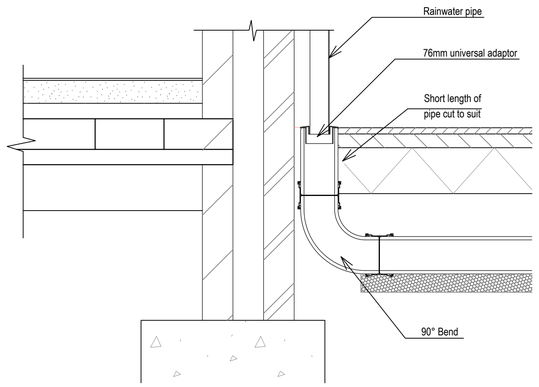

TYPICAL RWP DETAIL
1:10

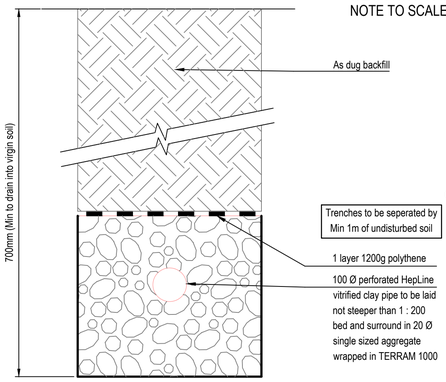

TYPICAL SECTION THROUGH DRAINAGE FIELD
1:10

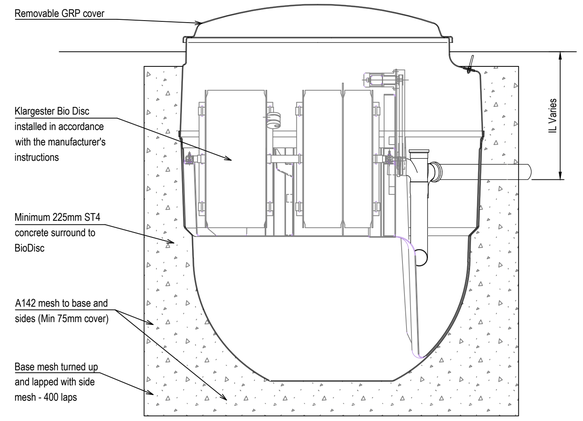

SECTION THROUGH KLARGESTER BIO DISC
1:20

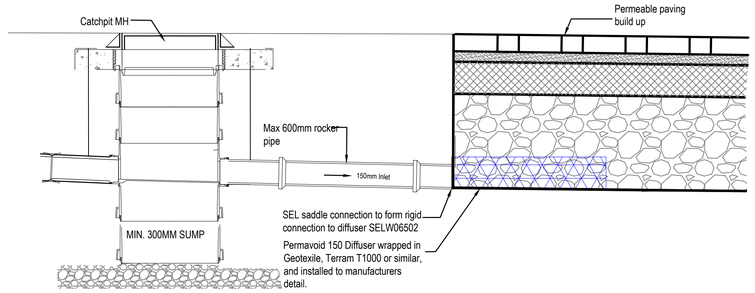

SECTION THROUGH KLARGESTER BIO DISC
NOTE TO SCALE

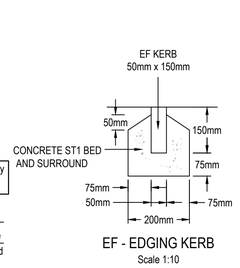

EF - EDGING KERB
Scale 1:10

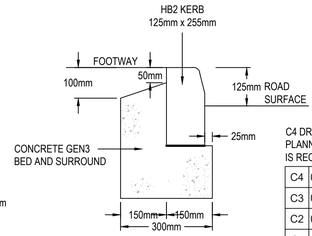

HB2 - HALF BATTERED KERB
Scale 1:10

GRADIENT OF DRAIN TO BE MAINTAINED THROUGH WALL. MINIMUM CLEARENCE ARROUND PIPE TO BE 50mm.

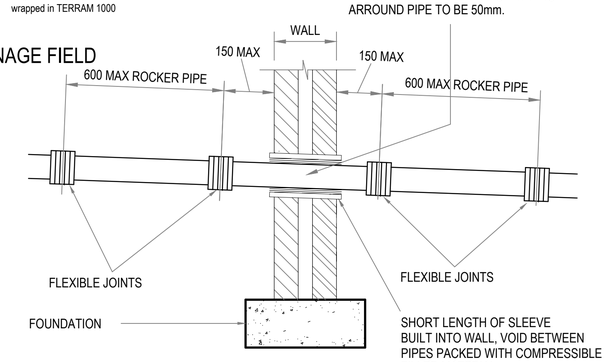

DRAINS THROUGH WALLS N.T.S.

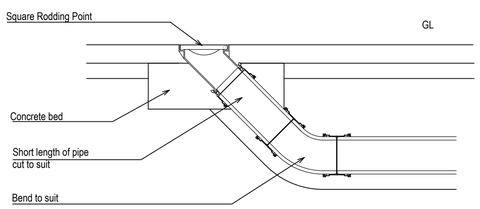

TYPICAL RWP DETAIL
1:10

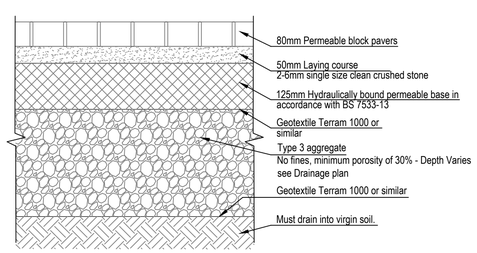

PERMEABLE PAVING MAKEUP
1:10

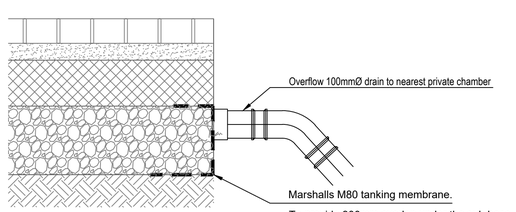

PERMEABLE PAVING MAKEUP WITH OVERFLOW
1:10

Notes:

1. All construction within 450mm of the finished surface level must be non-frost susceptible.

C4 DRAWINGS ARE YET TO BE APPROVED BY BUILDING CONTROL / PLANNING AUTHORITY / HIGHWAY AUTHORITIES. UNTIL APPROVAL IS RECEIVED, THERE IS A RISK OF CHANGES.

C4	05.10.23	Permeable Paving level updated	AH	KG
C3	07.08.23	Permeable paving detail updated	AH	KG
C2	06.07.23	Overflow pipe added	AH	KG
C1	03.04.23	C1 ISSUE	KG	KG

Rev Date Description By Apvd

PROJECT:
SPINDLEWOOD, ARUNDEL

TITLE:
SECTIONS AND DETAILS (Sheet 1 of 2)

CLIENT:
DUGAN HOMES

SCALE@A1:
AS SHOWN

PROJECT REF:
22394

DRAWING No: JUBB_XX_XX_DR_C_0204

REV: C4

Revision Referencing
P = Preliminary A = Approval T = Tender C = Construction

Jubb

Bristol, Cardiff, Plymouth, Winchester
St James Court, St James Parade, Bristol BS1 3LH

jubb.uk.com
+44(0)117 922 6266

ARUN DISTRICT COUNCIL WA/63/23/DOC