aspect arboriculture

LAND EAST OF WANDLEYS LANE

FONTWELL

Arboricultural Method Statement

June 2026

12753_AMS.001 Rev A

COPYRIGHT

The copyright of this document remains with Aspect Arboriculture Ltd. The contents of this Document therefore must not be copied or reproduced in whole or in part for any purpose without the written consent of Aspect Arboriculture Ltd.

Aspect Arboriculture
Hardwick Business Park
Noral Way
Banbury
Oxfordshire
OX16 2AF

[redacted]

CONTENTS

1. Introduction **1**
1.1 Background 1
1.2 Scope 1
1.3 Limitations 1

2. Essential Work **3**
2.1 Tree Protection Plan 3
2.2 Tree Removals 3
2.3 Pruning Works 4
2.4 Protective Barriers 4
2.5 CellWeb Installation 5
2.6 Proposed Order of Works 6
2.7 Site Manager's Point of Contact for Arboricultural Input 6

3. Conclusions **7**

APPENDICES

Tree Protection Plan Appendix A
Works Auditing Schedule Appendix B
Tree Survey Schedule Appendix C
Tree Protection Barrier Specifications Appendix D

1 INTRODUCTION

1.1 Background

1.1.1 Aspect Arboriculture are instructed by Bellway Homes Limited (Wessex) to prepare an Arboricultural Method Statement (hereafter the AMS) to inform the introduction of consented residential development at Land East of Wandleys Lane, Fontwell.

1.1.2 The development is consented within Planning application WA/35/23/OUT (Appeal Ref: APP/C3810/W/24/3349836), subject to conditions. The approved Arboricultural Impact Assessment, and discussion at the appeal recommended the production of an Arboricultural Method Statement and Tree Protection Plan to detail the confident protection of retained trees.

1.1.3 This AMS, Works Auditing Schedule and Tree Protection Plan (TPP) has been prepared pursuant to the requirements. The document specifies all safeguarding measures which must be adopted during the construction of the approved development to prevent harm from occurring to retained trees, including those which are under third party control and are positioned outside of the application area boundary.

1.1.4 It is our understanding that this work will be submitted to, and approved by, Arun District Council (hereafter the Council), prior to the commencement of any construction works occurring on site. Once approved, the safeguarding measures and works should be implemented as specified and maintained to the Council's satisfaction until completion of the works.

1.1.5 The confident protection of retained trees will be achieved through the use of the appended Tree Protection Plans (appendix A) and Works Auditing Schedule (appendix B), alongside other supporting documents included within appendices C and D.

1.2 Scope

1.2.1 This work relates to arboriculture therefore reliance should not be given to comments made in respect of other disciplines i.e. civil engineering or construction phasing, without first referencing an appropriate expert.

1.3 Limitations

1.3.1 This document has been prepared to inform safeguarding measures during construction and should not be interpreted as a report on tree health and safety. Reasonable effort has been made to identify visible defects whilst carrying out the tree survey, however trees are prone to natural failure without warning; no guarantee can be made as to the absolute safety of any of the trees surveyed.

1.3.2 Aspect's opinion of tree condition and structural potential is valid for limited period of twelve months from the date of survey; updated during March 2025. Validity is assumed in the

absence of inclement weather and no change to the trees' existing context. A copy of the site's tree survey information is provided within appendix D.

2 ESSENTIAL WORK

2.1 Tree Protection Plan

2.1.1 The Tree Protection Plan (TPP) provided in appendix A, will be relied upon during the construction of the consented access. It should be read in conjunction with the entirety of this document. To prevent avoidable damage occurring to retained trees or erroneous tree loss, a scaled A1 copy of the TPP, accompanied by a copy of this document will be provided to the Site Manager. This will ensure they are able to:

- Clearly identify all retained trees;
- Identify the correct locations for tree protection barriers;
- Identify features of the site that must be prepared/installed under an arboricultural watching brief;
- Request attendance of the Project Arboriculturist on site for site monitoring and to provide advice in case of any emerging issues;
- Demonstrate compliance with the Council's consent for the development by safeguarding trees which are to be retained, and evidencing this by completing the Works Auditing Schedule (appendix C).

2.2 Tree Removals

2.2.1 The tree removals required primarily relate to those required to construct the highways access. Importantly, the access proposal is not a Reserved Matter, and benefits from detailed consent, which is being implemented. To confirm, the removals required to construct the access are as discussed at appeal and approved.

Table 1: Tree Removals by BS5837 Category

Category A	Category B	Category C
None	**T35 & T36** Ash	**T26** Ash
		T34 Field Maple
		G11 Cherry Laurel, Sycamore
		G14Δ Cherry Laurel, Holly
		G15Δ Hazel
		G16 Field Maple, Hazel

+ Denotes assemblage of three or more species (refer to appendix B)
Δ Denotes partial removal of an arboricultural feature

2.2.2 Internally, the proposals enable the additional retention of a single Cherry (T1) when compared with the site's outline consent. Detailed drainage design requires the additional removal of a single declining Ash tree (T26) to construct the outfall from the attenuation basin. T26 is exhibiting advanced Ash dieback, and is anticipated to continue to decline; therefore the effect of the additional removal is particularly minor.

2.3 Pruning Works

2.3.1 Although not required to accommodate the proposed development, it is recommended that dead branches are removed from the canopies of retained trees where oversailing the existing highway and areas of public open space, to help mitigate the risk of future tree related hazards emerging.

2.3.2 Pruning works should be timed to avoid the main nesting season for birds between 1st March and 31st August. If scheduled within this period an ecologist must be present to advise on any necessary protective measures, and to confirm that tree works are not likely to cause disturbance to nesting birds.

2.3.3 Pruning work must be undertaken in accordance with section 7.3 (for removal of deadwood) and section 7.8 (for selective pruning) of BS3998:2010. A qualified and competent contractor should be employed to ensure that cuts are performed correctly and positioned so as to avoid future structural defects or physiological issues, facilitate growth and maintain aesthetic value.

2.4 Protective Barriers

2.4.1 Tree protection barriers are required to safeguard retained trees from damage during construction works. To achieve this, tree protection barriers will be erected prior to the commencement of any development works. For the direct protection of individual trees and groups, the barriers will consist of the default specification provided in BS5837:2012 (Barrier type A overleaf); where hedgerows are to be protected, a reduced specification is considered appropriate. This reduced specification omits diagonal bracing to the rear and comprises heras panels, mounted on feet and secured every second panel with a driven 100x100mm timber post or scaffold pole (barrier type B overleaf).

2.4.2 The locations for protective fencing are illustrated within the Tree Protection Plan (Appendix A) with a bold blue line indicating the default specification and a dashed light blue line denoting the reduced specification barriers.

2.4.3 The Site Manager will be responsible for arranging attendance of the Project Arboriculturist, for the purpose of setting out barriers; issues will be resolved on site and reported to the Council's Arboricultural Officer by the Project Arboriculturist.

2.4.4 Plate 1. Tree Protection Barriers.

2.5 CellWeb Installation

2.5.1 To construct the turning head adjacent to plot 1, limited excavation will be necessary due to the existing yard and barns, however, to minimise any additional depth and resultant root severance, it will be necessary to construct the turning head utilising a CellWeb (or similar) sub-base. Assessment of levels confirms that this is achievable; any excavation required is to comprise the removal of existing surfacing and structures.

2.5.2 The construction of the hard surfacing will be achieved by utilising a 200mm depth standard CellWeb sub-base (as a minimum) and non-invasive retaining edges.

2.5.3 Installation of CellWeb will adopt the following procedure:

Pre-commencement:

i. The Project Arboriculturist will brief the installation team on the importance of preventing soil compaction, oxygen/moisture restriction and the need for any excavation works within RPAs which may incur unnecessary root severance.

ii. Where protective barriers need to be temporarily repositioned to facilitate working room, areas of exposed RPAs will be protected by polyethylene Trackmats.

iii. The Project Arboriculturist will spray-mark the extent of affected RPAs on the ground prior to the commencement of works occurring for the benefit of machinery operators. A photograph of the spray-marked RPA limit and extent of affected area will be taken.

Installation:

iv. To prevent migration of the infill material and future loss of structural integrity, the area requiring no-dig surfacing must be covered with a porous geotextile underlay. This is to occur before installation of the cellular confinement system.

v. The cellular confinement system will be staked and expanded across the installation footprint area then cut to size.

vi. The edges are to be retained with non-invasive timber boards pinned with wooden stakes and an earth batter.

2.6 Proposed Order of Works

i. Pre-commencement site meeting between the Project Arboriculturist, Site Manager and the Council's Arboricultural Officer. Stages of arboricultural auditing/monitoring requirements will be identified/agreed.

ii. Necessary tree removals to be carried out prior to installation of tree protection barriers and commencement of construction works.

iii. Tree protection barriers are to be installed following removals and prior to construction works commencing. Upon request, barrier positions can be set-out by the Project Arboriculturist, as detailed within this document.

iv. The Council's Arboricultural Officer shall be informed of the proposed commencement date as soon as possible to allow the inspection of protection measures.

v. The Site Manager will assume responsibility for arranging the attendance of the Project Arboriculturist to oversee relocation of barriers and for the supervision of works within retained trees' RPAs.

2.7 Site Manager's Point of Contact for Arboricultural Input:

A. Mr James Bardey
Principal Arboricultural Consultant
Aspect Arboriculture
[redacted]

3 CONCLUSIONS

3.1 This document has been prepared as recommended within permission WA/35/23/OUT; detailing tree protection measures necessary to construct the consented development. It has been informed by guidance provided in BS5837:2012.

3.2 Pursuant to the instruction, this document and its supporting work (Appendices A - D) identify the tree removals, pruning works, tree protection measures, and works within RPAs that must be managed to facilitate the confident protection of retained trees during the consented development.

3.3 To ensure confident tree retention, siting of tree protection barriers and specified excavation works must be audited by the Project Arboriculturist; the outcome of these works will be reported to the Council's Arboricultural Officer on completion. These areas are specified within the Works Auditing Schedule (Appendix B).

3.4 It is Aspect's opinion that subject to strict adherence to this document, the consented development can be implemented whilst confidently protecting retained trees.

APPENDICES

APPENDIX A

TREE PROTECTION PLAN: (12753 TPP 01 Rev A)

12753 TPP 01 Rev A (1/3)

12753 TPP 01 Rev A (2/3)

Barnfield Cottages
Missione Vecchia
Jardin Des Fleurs
White Cottage
Lanes End
Woodland
Fresh
The Holly
Larchfield
Cedar Cottage
Wandleys Cottage
Woodside
Woodlea Cottage
Tollybrook
The Roundel
Brookside
Spinneys
Stanstead
Tottingly
Willows
Pantiles
Chilterns
The Pines
Lambourn
Pant y Blodau
Folie House
Pond

Tree Protection Barrier Specification

100x100mm timber posts
Couple clip clamp
Heras panel
Depth 400mm below ground
Rubber feet
3.45m
2.0m

Heras panels supported with pinned rubber feet and driven 100x100mm timber posts on every second panel.

Default Barrier Specification, cited BS 5837:2012

Key
1 Standard scaffold poles
2 Heavy gauge 2m tall galvanized tube and welded mesh infill panels
3 Panels secured to uprights and cross-members with wire ties
4 Ground level
5 Uprights driven into the ground until secure (minimum depth 0.6m)
6 Stability scaffold braces

1:1500 @ A3

0m 10m 20m 50m

KEY:

- Site Boundary
- Tree Numbers
- Tree Canopies
- Category 'U' Trees
- Category 'A' RPA
- Category 'B' RPA
- Category 'C' RPA
- Ancient Woodland
- Ancient Woodland 15m Buffer
- Tree Preservation Order
- Trees to be Removed
- Tree Protection Barrier
- Tree Protection Barrier (Secondary Specification)
- Tree Protection Barrier (2nd Position)
- Supervised Excavation
- Above Soil Surfacing

Cited from Google Earth

REV	DATE	NOTE	Drawn	Chk'd
A	JUN '26	Updated to revised drainage information	JB	n/a

REVISIONS

aspect arboriculture

TITLE

Wandleys Lane, Fontwell
Tree Protection Plan

CLIENT

Bellway Homes Limited

SCALE	DATE	DRAWN
1:1500 @ A3	MAY 2026	GW

DRAWING NUMBER	REVISION
12753 TPP 01 Rev A (Overview)	

Based on: 5988-005-5551

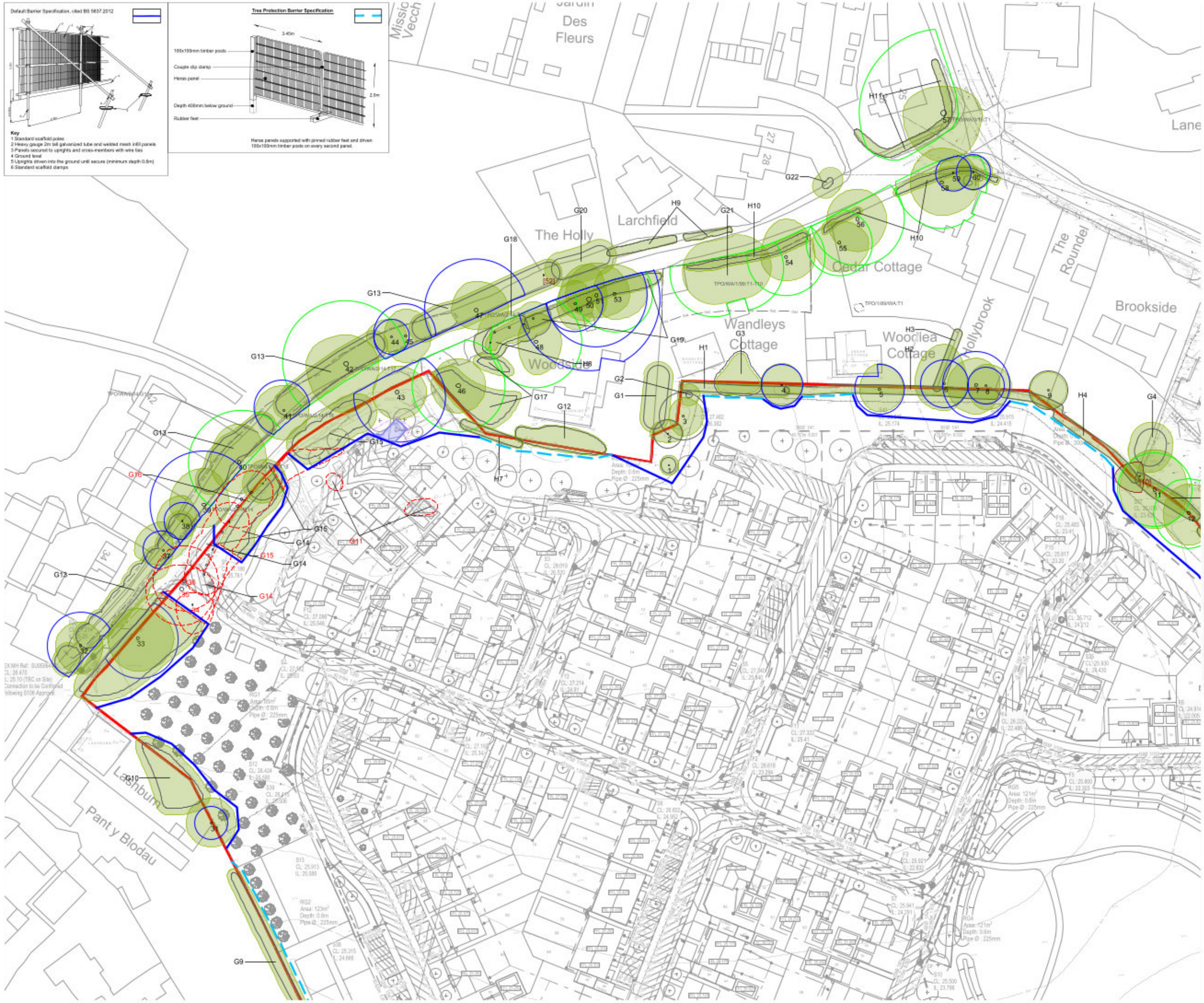

Cited from Google Earth

REV	DATE	NOTE	Drawn	Chk'd
A	JUN '26	Updated to revised drainage information	JB	n/a

REVISIONS

aspect arboriculture

TITLE

Wandleys Lane, Fontwell
Tree Protection Plan

CLIENT

Bellway Homes Limited

SCALE	DATE	DRAWN
1:1000 @ A3	MAY 2026	GW

DRAWING NUMBER	REVISION
12753 TPP 01 Rev A (1/3)	

Based on: 5988-005-5551

1:1000 @ A3

0m 10m 20m 40m

KEY:

- Site Boundary
- Tree Numbers
- Tree Canopies
- Category 'U' Trees
- Category 'A' RPA
- Category 'B' RPA
- Category 'C' RPA
- Ancient Woodland
- Ancient Woodland 15m Buffer
- Tree Preservation Order
- Trees to be Removed
- Tree Protection Barrier
- Tree Protection Barrier (Secondary Specification)
- Tree Protection Barrier (2nd Position)
- Supervised Excavation
- Above Soil Surfacing

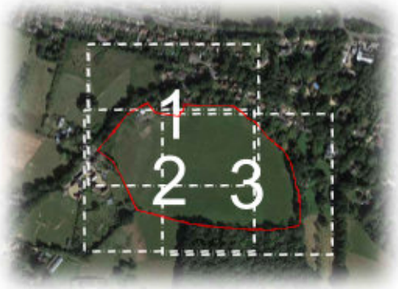

Cited from Google Earth

REV	DATE	NOTE	Drawn	Chk'd
A	JUN '26	Updated to revised drainage information	JB	n/a

REVISIONS

aspect arboriculture

TITLE

Wandleys Lane, Fontwell
Tree Protection Plan

CLIENT

Bellway Homes Limited

SCALE	DATE	DRAWN
1:1000 @ A3	MAY 2026	GW

DRAWING NUMBER	REVISION
12753 TPP 01 Rev A (2/3)	

Based on: 5988-005-5551

Default Barrier Specification, cited BS 5837:2012

Key
1 Standard scaffold poles
2 Heavy gauge 2m tall galvanized tube and welded mesh infill panels
3 Panels secured to uprights and cross-members with wire ties
4 Ground level
5 Uprights driven into the ground until secure (minimum depth 0.6m)
6 Standard scaffold clamps

Tree Protection Barrier Specification

3.45m
100x100mm timber posts
Couple clip clamp
Heras panel
Depth 400mm below ground
Rubber feet
2.0m

Heras panels supported with pinned rubber feet and driven 100x100mm timber posts on every second panel.

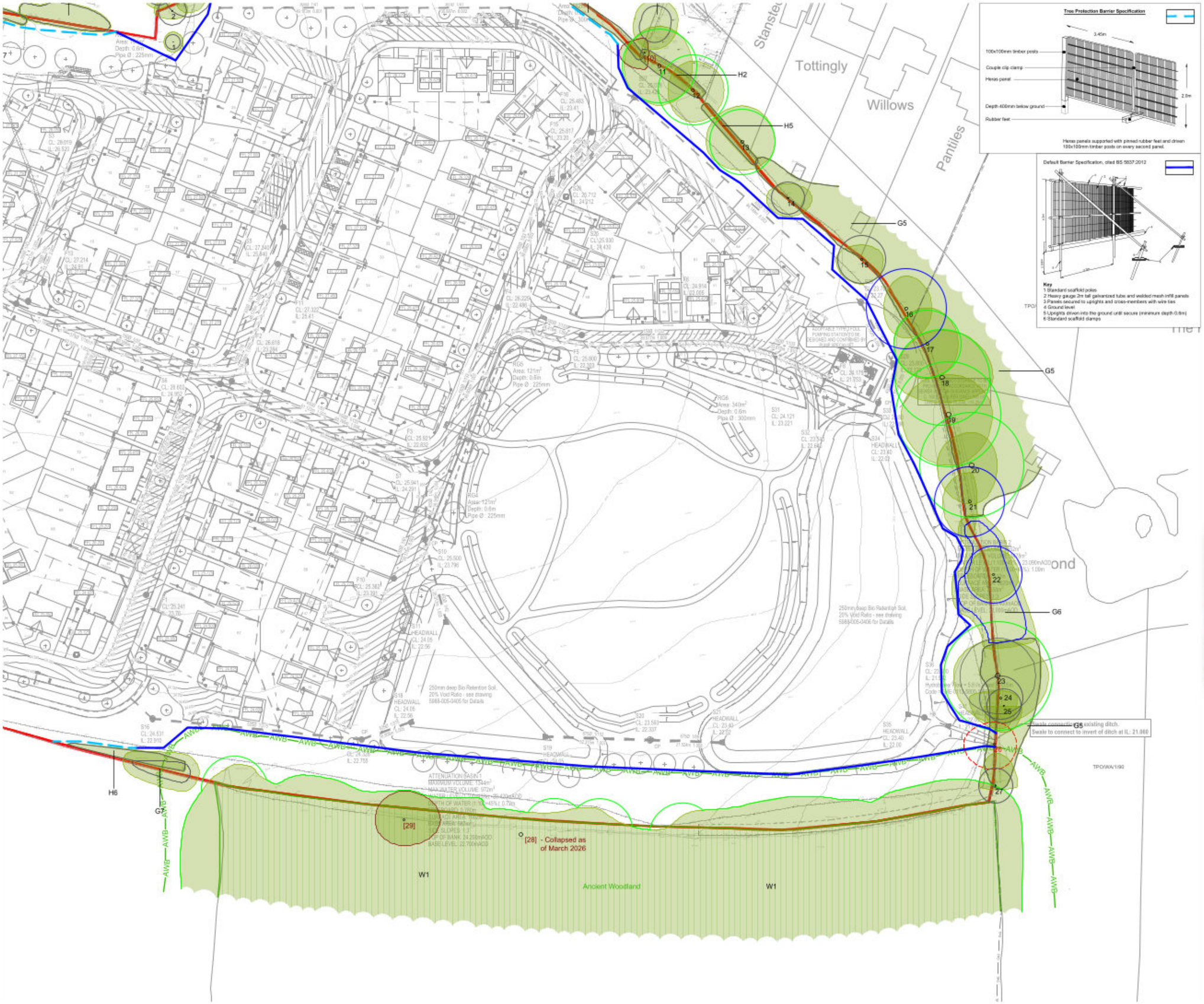

1:1000 @ A3

0m 10m 20m 40m

KEY:

- Site Boundary
- Tree Numbers
- Tree Canopies
- Category 'U' Trees
- Category 'A' RPA
- Category 'B' RPA
- Category 'C' RPA
- Ancient Woodland
- Ancient Woodland 15m Buffer
- Tree Preservation Order
- Trees to be Removed
- Tree Protection Barrier
- Tree Protection Barrier (Secondary Specification)
- Tree Protection Barrier (2nd Position)
- Supervised Excavation
- Above Soil Surfacing

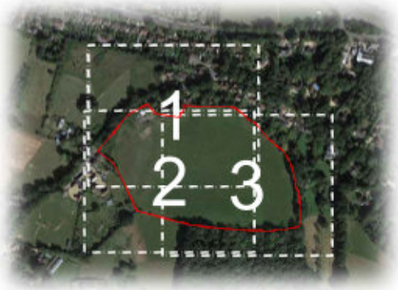

Cited from Google Earth

REV	DATE	NOTE	Drawn	Chk'd
A	JUN '26	Updated to revised drainage information	JB	n/a

REVISIONS

aspect arboriculture

TITLE

Wandleys Lane, Fontwell
Tree Protection Plan

CLIENT

Bellway Homes Limited

SCALE	DATE	DRAWN
1:1000 @ A3	MAY 2026	GW

DRAWING NUMBER	REVISION
12753 TPP 01 Rev A (3/3)	

Based on: 5988-005-5551

APPENDIX B

WORKS AUDITING SCHEDULE

Works Auditing Schedule

Works Requiring Auditing	Tree No.	Date Undertaken	Date Reported to LPA
1. Pre-commencement meeting identifying tree removals, tree protection barrier locations and safeguarding measures, as specified within 12753_AMS.001 Rev A and illustrated on drawing nos. 12753_TPP.01 Rev A.	As drawn		
2: Inspection of tree protection barriers and prior to commencement of development works by Project Arboriculturist.	As drawn		
3: CellWeb Installation	T43		

This schedule will be completed as evidence that works have been undertaken as per the approved methodology.

APPENDIX C

TREE SURVEY SCHEDULE (12753 TS 01)

aspect arboriculture

BS 5837:2012 Tree Schedule: Wandleys Lane, Fontwell

12753 TS 01

aspect arboriculture

BS5837:2012 Tree Survey: Explanation of Survey Criteria

*Area around tree deemed to contain sufficient roots and rooting volume to maintain the tree's viability, and where the protection of roots and soil structure is a priority. *The RPA has been manipulated to allow for various site features, i.e. roads, structures or changes in levels. Please refer to the Tree Constraints Plan for these changes.*

e.g.: young, semi-mature, early-mature, mature, notable, veteran or ancient.

Sequential reference number cited on all aspect drawing.

Category prefix A-C denotes arboricultural quality, decreasing from A (high) to C (low); Subcategories 1, 2 and 3 highlight associated arboricultural (1), landscape (2) and ecological (3) qualities.

Category U trees are those in such a condition that they cannot be realistically retained as living trees in the current context for the long term.

Height and Crown spread measured to the nearest half meter; # denotes where this is estimated.

Tree Number	Common Species Name	Trunk Diameter (mm)	Height (m)	Crown Spread (m)					Crown Clearance (m)	Life Stage	Physiological Condition	Structural Condition	Comments	BS5837 Category	RPA Radius (m)
				N	E	S	W	radial							

Measured to the nearest 10mm; # denotes estimated diameter where access is not possible.

e.g.: above-average, average, below average or dead

General observations, i.e. defects, preliminary management recommendation, presence of pests/disease, perceived significance.

Height of first significant branch and/or canopy

e.g.: good, indifferent, poor, or hazardous

Colour band key:

Category A
Category B
Category C
Category U

The following survey should not be interpreted as a report on tree health and safety. Aspect's opinion of tree condition and structural potential is valid for a limited period of 12 months from the date of inspection. Validity is assumed in the absence of inclement weather and no change to the trees existing setting. Veteran or ancient trees defined as per the NPPF definition.

Tree Number	Common Species Name	Trunk Diameter (mm)	Height (m)	Crown Spread (m) N	E	S	W	Radial	First Significant Branch (m)	Crown Clearance (m)	Life Stage	Physiological Condition	Structural Condition	Comments	BS5837 Category	RPA Radius (m)
1	Cherry	130 100 70	4.5	2.75	2.75	2.75	2.5		1.5	1.5	Semi Mature	Average	Indifferent	Standalone Specimen Multi stemmed from ground level, unions obscured by soil build up Unremarkable example of species	C12	2.1
2	Cherry	330#	7.5	4#	4.75	2.25	5#		1.5	0.75	Early Mature	Average	Indifferent	Clad and obscured by Ivy, unable to thoroughly inspect Stem inaccessible due to dense understory Unremarkable example of species	C1	3.9
3	Cherry	500 o.i.	10	6.5	6.75	5.5#	4#		1.5	1	Early mature	Average	Indifferent	Clad and obscured by Ivy, unable to thoroughly inspect Stem inaccessible due to dense understory Unremarkable example of species	C1	6.6
4	English Oak	480#	11.5	6#	5.5#	5.5	6#		2.25	2.5	Early Mature	Average	Indifferent	Inaccessible, offsite within neighbouring residential land, unable to thoroughly inspect Reduction to lower southern crown Moderate example of species	B1	5.7
5	Cherry	400 380 #	12	7#	6.5	6.25	5.5		2.5	2.5	Early Mature	Average	Indifferent	Inaccessible, offsite within neighbouring residential land, unable to thoroughly inspect Bifurcates from c.1.5m, union appears tight but sound Previously reduced on all aspects of crown including height to c.8m Moderate example of species	B1	6.6*
6	English Oak	550#	16	11#	6	7.5	8.25		6#	6#	Early Mature	Average	Indifferent	Inaccessible, offsite within neighbouring residential land, unable to thoroughly inspect Mutually suppressed and cohesive with companion shelter Previously crown lifted Moderate example of species	B12	6.6
7	English Oak	580 500 #	17	7.5	6.5	8	8		5.5	4	Early Mature	Average	Indifferent	Inaccessible, offsite within neighbouring residential land, unable to thoroughly inspect Mutually suppressed and cohesive with companion shelter Bifurcates from c.0.25m, unable to inspect union Previously crown lifted Moderate example of species	B12	9.3
8	English Oak	430#	13	6#	7#	6.5	5#		6#	4	Early Mature	Average	Indifferent	Inaccessible, offsite within neighbouring residential land, unable to thoroughly inspect Mutually suppressed and cohesive with companion shelter Previously crown lifted	B2	5.1
9	Eucalyptus	5*200#	7					5#	1#	1.5#	Early Mature	Average	Indifferent	Inaccessible, offsite within neighbouring residential land, unable to thoroughly inspect Squat canopy form Unremarkable example of species	C1	5.4

Tree Number	Common Species Name	Trunk Diameter (mm)	Height (m)	Crown Spread (m) N	E	S	W	Radial	First Significant Branch (m)	Crown Clearance (m)	Life Stage	Physiological Condition	Structural Condition	Comments	BS5837 Category	RPA Radius (m)
10	Ash	220 2*100 70 #	11.5	4#	1#	4.5	7#		1.75	1.5	Semi Mature	Dead	Hazardous	Inaccessible at time of survey, situated within boundary of neighbouring residential land Clad and obscured by Ivy, unable to thoroughly inspect Standing deadwood	U	N/A
11	English Oak	850#	18	11#	9	10.75	9.75		5.5	5.5	Mature	Average	Indifferent	Inaccessible at time of survey, situated within boundary of neighbouring residential land Clad and obscured by Ivy, unable to thoroughly inspect Previously crown lifted Good example of species	A12	10.2
12	English Oak	800#	14.5	8#	8.5#	8.75	7#		5.5#	2	Mature	Average	Indifferent	Inaccessible at time of survey, situated within boundary of neighbouring residential land Clad and obscured by Ivy, unable to thoroughly inspect Mutually suppressed and cohesive with companion shelter Previously crown lifted Good example of species	A12	9.6
13	English Oak	750#	14	10#	9#	7.75	10#		4#	1.75	Mature	Average	Indifferent	Inaccessible at time of survey, situated within boundary of neighbouring residential land Clad and obscured by Ivy, unable to thoroughly inspect Previously crown lifted Good example of species	A12	9
14	English Oak	370#	7.5	4#	6.5#	5	6#		1.5	1	Early Mature	Average	Indifferent	Inaccessible, offsite within neighbouring residential land, unable to thoroughly inspect Stem kinks south from ground level Unremarkable example of species	C1	4.5
15	English Oak	420 360 #	10.5	4#	6	6.75	7		1.25	1.25	Early Mature	Average	Indifferent	Inaccessible, offsite within neighbouring residential land, unable to thoroughly inspect Clad and obscured by Ivy Bifurcates from ground level Slight lean south from ground level Crown biased south Unremarkable example of species	C1	6.6
16	English Oak	700 600 #	16	9#	7#	8	6.25		5.25	2.75	Mature	Average	Indifferent	Inaccessible at time of survey, situated within boundary of neighbouring residential land Clad and obscured by Ivy, unable to thoroughly inspect Mutually suppressed and cohesive with companion shelter Bifurcates from c.1m Above average epicormic growth Tear out wound on western stem at c.9m	B2	11.1
17	English Oak	780#	18.5	10#	8.5#	9.5	9.25		4	3.25	Mature	Average	Indifferent	Inaccessible at time of survey, situated within boundary of neighbouring residential land Clad and obscured by Ivy, unable to thoroughly inspect Mutually suppressed and cohesive with companion shelter Average internal deadwood of large diameter in lower crown Multiple tear out wounds throughout lower crown Prominent within long distance views from the west	A2	9.3

Tree Number	Common Species Name	Trunk Diameter (mm)	Height (m)	Crown Spread (m) N	E	S	W	Radial	First Significant Branch (m)	Crown Clearance (m)	Life Stage	Physiological Condition	Structural Condition	Comments	BS5837 Category	RPA Radius (m)
18	English Oak	1100#	23	13#	14#	6.75	13		3.5	5	Mature	Average	Indifferent	Inaccessible at time of survey, situated within boundary of neighbouring residential land Clad and obscured by Ivy, unable to thoroughly inspect Mutually suppressed and cohesive with companion shelter Average internal deadwood of large diameter in lower crown Prominent within long distance views from the south Good example of species	A12	13.2
19	English Oak	980 680 #	22	11#	12#	14	13		3.5	1.5	Mature	Average	Indifferent	Inaccessible at time of survey, situated within boundary of neighbouring residential land Mutually suppressed and cohesive with companion shelter Average internal deadwood of large diameter in lower crown Bifurcates from c.0.5m, union appears sound Prominent within long distance views from the west Good example of species	A12	14.4
20	English Oak	1200#	16	9#	7#	10.75	9.5		3.5	2.5	Mature	Average	Indifferent	Inaccessible at time of survey, situated within boundary of neighbouring residential land Clad and obscured by Ivy, unable to thoroughly inspect Mutually suppressed and cohesive with companion shelter Slight lean north from ground level Previous reduction to lower crown Prominent within moderate distance views from the west Good example of species	A12	14.4
21	English Oak	800#	17	8#	2#	11.5	6		3	4.5	Mature	Below Average	Indifferent	Inaccessible at time of survey, situated within boundary of neighbouring residential land Mutually suppressed and cohesive with companion shelter Above average epicormic growth Sparse crown for species Tear out wound on western limb c.4.5m Crown biased south Previous reduction of western crown Prominent within moderate distance views from the west	B2	9.6
22	Douglas Fir	650#	24					7#	7#	6	Early Mature	Average	Indifferent	Inaccessible, offsite within neighbouring residential land, unable to thoroughly inspect Prominent within moderate distance views from the west	B2	7.8
23	English Oak	1300#	22	10#	14#	10	10		3	2	Mature	Average	Indifferent	Inaccessible at time of survey, situated within boundary of neighbouring residential land Clad and obscured by Ivy, unable to thoroughly inspect Mutually suppressed and cohesive with companion shelter Average internal deadwood of large diameter in lower crown Woodpecker holes throughout scaffold structure Habitat burrow between buttress flares on western aspect of base leading under bole Trunk leans east from ground level Multiple tear out wounds throughout lower crown, including scoffold failure to south Prominent within long distance views from the west Good example of species	A12	15

Tree Number	Common Species Name	Trunk Diameter (mm)	Height (m)	Crown Spread (m) N	E	S	W	Radial	First Significant Branch (m)	Crown Clearance (m)	Life Stage	Physiological Condition	Structural Condition	Comments	BS5837 Category	RPA Radius (m)
24	Ash	500#	17	2#	4.5#	7.5	7.5		3.5	8#	Early Mature	Below Average	Indifferent	Inaccessible at time of survey, situated within boundary of neighbouring residential land Above average internal deadwood Above average epicormic growth Dieback to upper crown Previous unsympathetic reduction of lower western crown Supressed by neighbouring companions Reduced future potential	C1	6
25	Field Maple	390#	10	0	5#	7.25	5.5		1.75	1.5	Early Mature	Average	Indifferent	Inaccessible at time of survey, situated within boundary of neighbouring residential land Partially obscured by Bramble, unable to thoroughly inspect Crown supressed by neighbouring companions Crown biased south Unremarkable example of species	C1	4.8
26	Ash	450#	15	6#	6#	7#	8.5		6#	5#	Early Mature	Below Average	Indifferent	Inaccessible at time of survey, situated within boundary of neighbouring residential land Mutually suppressed and cohesive with companion shelter Maintains single leader for majority of height Minor internal deadwood Prominent within moderate distance views Above average deadwood	C12	5.4
27	Field Maple	400#	9	9#	6#	1#	4.5		2	2	Early Mature	Average	Poor	Inaccessible at time of survey, situated within boundary of neighbouring residential land Significant lean to north from c.3m Unremarkable example of species	C12	4.8
28	Ash													Collapsed As of March 2026		
29	Ash	580#	20	8	10#	7#	8#		6.5#	10	Early Mature	Dead	Hazardous	Inaccessible at time of survey, situated within boundary of neighbouring land Clad and obscured by Ivy, unable to thoroughly inspect Standing deadwood	U	N/A
30	Hawthorn	120 2*90 #	7	3	4.5	3#	3#		1.25#	1	Semi Mature	Average	Indifferent	Clad and obscured by Ivy and Bramble, unable to thoroughly inspect Inaccessible at time of survey, situated within boundary of neighbouring land Standalone Specimen Unremarkable example of species	C12	2.1
31	English Oak	370#	11	7#	6.75	6.5	7#		2.25	1.5	Early Mature	Average	Indifferent	Inaccessible, offsite within neighbouring residential land, unable to thoroughly inspect Structure appears typical for the species within current context Moderate example of species	B1	4.5

Tree Number	Common Species Name	Trunk Diameter (mm)	Height (m)	Crown Spread (m) N	E	S	W	Radial	First Significant Branch (m)	Crown Clearance (m)	Life Stage	Physiological Condition	Structural Condition	Comments	BS5837 Category	RPA Radius (m)
32	Field Maple	515 405	16#	6.5#	6	7.75	7#		3.25	2.5	Mature	Average	Indifferent	Co-dominant stems from ground level, union appears sound Tear out wound to eastern aspect of trunk at c.3.5m Overhead utility cable runs through eastern aspect of the canopy, visible signs of previous pruning to clear Moderate example of the species	B12	7.8*
33	English Oak	480 590	15	8.25	10#	9#	8.25		2.5	4	Early Mature	Average	Indifferent	Clad and obscured by Ivy, unable to thoroughly inspect Bifurcates from c.0.5m, stems have fused to c.1.25m Moderate example of species	B12	8.7*
34	Field Maple	340 255	12	3.5	6#	8#	4.5		2	2	Early Mature	Average	Indifferent	Clad and obscured by Ivy, unable to thoroughly inspect Co-dominant stems from c.0.75m Leans to the south from c.2m Unremarkable example of species	C12	5.1
35	Ash	740 730	21	6.75	9#	10#	10		4	6	Mature	Average	Indifferent	Co-dominant stems from c.1.25m, union appears sound Moderate example of species	B12	12.3*
36	Ash	550 530	13.5	10	9.5#	8#	8.5		6.75	6.75	Early Mature	Average	Indifferent	Co-dominant stems from c.0.25m, stems have fused to c.1.5m Suppressed by neighbouring companion Moderate example of species	B12	9*
37	English Oak	410 oi	13	8#	2.75	4	8#		3.5	4	Early Mature	Average	Indifferent	Clad and obscured by Ivy, unable to thoroughly inspect Trunk kinks to west at c.4m, then corrects at c.5.5m	B2	4.8*
38	English Oak	390#	13	7#	4	5	7#		6#	6#	Early Mature	Average	Indifferent	Inaccessible, offsite within neighbouring third party land Slight lean to the west from ground level Moderate example of species	B12	4.8*
39	English Oak	930 o.i	17	10#	7	6.25	9.5#		3	3	Early Mature	Average	Indifferent	Inaccessible, offsite within neighbouring third party land Significant lean to the west from c.2.75m, corrects at c.8.5m	B2	11.1*
40	English Oak	890 oi	16.5	10.5#	7.5	8.75	8#		3	4	Mature	Average	Good	Clad and obscured by Ivy, unable to thoroughly inspect Overhead utility cable runs through eastern aspect of crown Good example of species	A12	10.8*
41	English Oak	580	16	7#	6.75	8	8#		4.5	5	Early Mature	Average	Indifferent	Overhead utility cables runs through lower eastern aspect of canopy Recent reduction of lower east crown Moderate example of species	B12	6.9*
42	Ash	900 760	20	8#	9	13.5	11#		4.5	0.5	Mature	Average	Good	Bifurcates from c.1.25m, union appears sound Failed sub dominant stem to eastern aspect of base Good example of the species	A12	14.1*

Tree Number	Common Species Name	Trunk Diameter (mm)	Height (m)	Crown Spread (m) N	E	S	W	Radial	First Significant Branch (m)	Crown Clearance (m)	Life Stage	Physiological Condition	Structural Condition	Comments	BS5837 Category	RPA Radius (m)
43	English Oak	950 oi	13	7.25	8#	7.5	6.75		2.5	4.5	Mature	Average	Indifferent	Clad and obscured by Ivy, unable to thoroughly inspect Sparse northern crown Above average large diameter deadwood within the lower canopy Moderate example of species	B12	11.4*
44	Sycamore	410 oi	14	5#	4	4	7#		3	1	Early Mature	Average	Indifferent	Clad and obscured by Ivy, unable to thoroughly inspect Maintains single leader for majority of height Moderate example of species	B12	4.8
45	English Oak	630	13	7.5#	7	7.25	6#		2	6	Early Mature	Average	Indifferent	Partially clad and obscured by Ivy, unable to thoroughly inspect Balanced radial crown and scaffold structure Moderate example of species	B12	7.5*
46	Sweet Chestnut	800 670 #						7.5	8#	1.5	Mature	Average	Indifferent	Inaccessible, situated offsite within neighbouring third party land Bifurcates from c.1.75m, union appears tight Prominent within views from highway to the north	A2	12.6*
47	English Oak	890 oi	12	8#	9#	5.25	6.75		4.5	4.5	Mature	Average	Poor	Significant lean to northeast from c.5.5m Overhead utility cable runs through southern aspect of crown Prominent within moderate distance views	B2	10.8*
48	English Oak	1000	21	8	7	9	5		2.5	2	Mature	Average	Good	Inaccessible, situated offsite within third party land Structure appears typical for the species within current context Good example of species	A12	12*
49	Beech	550#	14.5	6.5	5#	7#	5#		2.5#	2.5#	Early Mature	Average	Indifferent	Inaccessible, situated offsite within third party land Structure appears typical for the species within current context Moderate example of species	B12	6.6*
50	Beech	880 500 370 250 650 #	15	9.75	5#	6#	8.25		3#	3#	Mature	Average	Poor	Inaccessible, situated offsite within third party land Multi stemmed from ground level Moderate example of species	B12	15*
51	Beech	700 600 #	19	9#	9.25	6#	8.5		3#	5#	Mature	Average	Indifferent	Inaccessible, situated offsite within third party land Bifurcates from ground level Moderate example of species	B12	11.1*
52	Holly	500#	4					0	0	0	Mature	Dead	Hazardous	Standing deadwood	U	N/A
53	Beech	750#	23	8#	9#	7#	6#		7#	7#	Mature	Average	Good	Inaccessible, situated offsite within third party land Structure appears typical for the species within current context Good example of species	A12	9*

Tree Number	Common Species Name	Trunk Diameter (mm)	Height (m)	Crown Spread (m) N	E	S	W	Radial	First Significant Branch (m)	Crown Clearance (m)	Life Stage	Physiological Condition	Structural Condition	Comments	BS5837 Category	RPA Radius (m)
54	English Oak	800#	18.5	10.5	8#	6.5#	7#		4#	4#	Mature	Average	Indifferent	Inaccessible, situated offsite within third party land Structure appears typical for the species within current context Good example of species	A12	9.6*
55	English Oak	750#	19	6#	8#	8#	7.5#		6#	7#	Mature	Average	Indifferent	Inaccessible, situated offsite within third party land Clad and obscured by Ivy Structure appears typical for the species within current context Good example of species	A12	9*
56	English Oak	900#	18	8.25	8#	9#	8.5#		5#	5#	Mature	Average	Indifferent	Inaccessible, situated offsite within third party land Clad and obscured by Ivy Structure appears typical for the species within current context Good example of species	A12	10.8*
57	English Oak	1500#	20	7.5	10.5	13.25	11.25		5	5	Notable	Average	Indifferent	Inaccessible, situated offsite within neighbouring third party land Multiple large diameter pruning wounds on lower trunk Overhead utility cable running through eastern aspect of crown Above average epicormic growth throughout crown Considered to be of Notable Status due to very large girth for the species, high arboricultural value	A12	15*
58	English Oak	900#	19	9.5	10.25	9#	8.75		8#	7#	Mature	Average	Indifferent	Inaccessible, situated offsite within third party land Partially clad and obscured by Ivy, unable to thoroughly inspect Previous reduction of lower eastern crown Good example of species	A12	10.8*
59	Yew	250 240 190 #	8	4.5	5	4.5#	4		3.5#	2.5	Semi Mature	Average	Indifferent	Inaccessible, situated offsite within third party land Clad and obscured by Ivy, unable to thoroughly inspect Structure appears typical for the species within current context Moderate example of species	B1	4.8*
60	Yew	400#	9	4.5	5.25	5#	4		3.5#	2.5	Semi Mature	Average	Indifferent	Inaccessible, situated offsite within third party land Clad and obscured by Ivy, unable to thoroughly inspect Structure appears typical for the species within current context Moderate example of species	B1	4.8
G1	Cherry Hazel	250# av	9 av					4 av	0.25 av	0.25 av	Young to Semi Mature	Average	Indifferent	Inaccessible, offsite within neighbouring residential land, unable to thoroughly inspect Predominantly clad and obscured by Ivy Intermittent ornamental collection Unremarkable collection	C12	3
G2	Cherry	75 av	5 max					3 max	1.5 av	1.5 av	Young to Semi Mature	Average	Indifferent	Predominantly clad and obscured by Ivy and Bramble, unable to thoroughly inspect Readily replaceable at current size, low arboricultural value	C12	0.9

Tree Number	Common Species Name	Trunk Diameter (mm)	Height (m)	Crown Spread (m) N	E	S	W	Radial	First Significant Branch (m)	Crown Clearance (m)	Life Stage	Physiological Condition	Structural Condition	Comments	BS5837 Category	RPA Radius (m)
G3	Apple Eucalyptus Holly	300# max	11 max					3 max	3 to 6#	3 to 6#	Young to Semi Mature	Average	Indifferent	Inaccessible, offsite within neighbouring residential land, unable to thoroughly inspect Predominantly clad and obscured by Ivy Intermittent group of established ornamental plantings Unremarkable collection	C12	3.6
G4	Ash	350 av	15 av					6# max	7.5# av	6.5# av	Semi Mature to Early Mature	Below Average to Average	Indifferent	Inaccessible, offsite within adjacent third-party land, unable to thoroughly inspect Predominantly clad and obscured by Ivy Visible signs of decline Cohesive group of established Ash standards Unremarkable collection	C12	4.2
G5	Blackthorn Goat Willow Hazel Sycamore Cherry Laurel Holly	75 av	4.5 av					1 av	0.5 av	0.25 av	Young to Semi Mature	Average	Indifferent	Predominantly clad and obscured by Ivy, unable to thoroughly inspect Partially managed scrub group, maintained on lower canopies only Readily replaceable at current size, low arboricultural value	C12	0.9
G6	Cherry Laurel Field Maple Goat Willow Hazel	390 270 220 # av	11 av					8 max	0.5 to 4.5	0.25 to 3	Semi Mature to Early Mature	Average	Indifferent	Established cohesive boundary group Structures appear typical for the species within current context Individually of low significance, conferred moderate value as collective only	B2	6.3
G7	Norway Maple	250# max	11 max					5.5 max	2 av	1.5 to 2	Semi Mature	Average	Indifferent	Inaccessible at time of survey Defines boundary with adjacent land Linear group of newly established ornamental plantings Unremarkable collection	C12	3
G8	Blackthorn Elder English Oak	75 av	4 av					1 av	0.5 av	0.5 av	Young	Average	Indifferent	Partially managed scrub group, maintained on lower canopies only Readily replaceable at current size, low arboricultural value	C12	0.9
G9	Dogwood English Oak Field Maple Guelder Rose Hazel Hornbeam Plum Viburnum	100 av	2.5 av					2 av	1 av	1.25 av	Young	Average	Indifferent	Inaccessible, offsite within adjacent third-party land, unable to thoroughly inspect Collection of establishing ornamental plantings, maintained as hedge Readily replaceable at current size, low arboricultural value	C12	0.9
G10	Ash Buddleia Cherry Laurel English Oak Holly Lawson Cypress	200# av	11 av					4.25 av	0.5 to 2	0.5 to 2	Young to Semi Mature	Average	Indifferent	Cohesive parcel of establishing ornamental plantings Unremarkable collection	C12	2.4

Tree Number	Common Species Name	Trunk Diameter (mm)	Height (m)	Crown Spread (m) N	E	S	W	Radial	First Significant Branch (m)	Crown Clearance (m)	Life Stage	Physiological Condition	Structural Condition	Comments	BS5837 Category	RPA Radius (m)
G11	Cherry Laurel Sycamore	75 av	4 av					2.5 max	0.5 av	0.5 av	Young	Average	Indifferent	Intermittent parcel of ornamental plantings and self set specimens Readily replaceable at current size, low arboricultural value	C12	0.9
G12	Apple Cherry	2*75# av	4 av					1.5 av	1 av	1.25 av	Semi Mature	Below Average to Average	Indifferent	Inaccessible, offsite within adjacent third-party land, unable to thoroughly inspect Intermittent collection of ornamental plantings Readily replaceable at current size, low arboricultural value	C12	1.2
G13	Cherry Laurel Elder Hazel Holly English Oak Horse Chestnut	5* 90 2* 100 3* 70 av 340 max	9 av					5.5 max 4 av	0.5 to 2	0.5 to 2	Young to Early Mature	Average	Indifferent	Situated within highway verge Predominantly clad and obscured by Ivy Unremarkable collection	C12	3.3 av* 4.2 max*
G14	Cherry Laurel Holly	125 140 3*80 2*60 4*100 av	8 av					7 max	0.5 to 4	0.5 to 4	Semi Mature to Early Mature	Average	Indifferent	Cohesive group majoring Cherry Laurel Unremarkable collection	C12	3.6*
G15	Hazel	2*140 160 2*150 140 av 235 220 205 180 170 140 135 120 2*100 max	9 av					5.5 av	0.5 to 2	0.5 to 2	Semi Mature to Early Mature	Average	Indifferent	Cohesive linear belt of Hazel Unremarkable collection	C12	3.9 av* 6 max*
G16	Field Maple Hazel	260 200 255 350 oi av	15 av					6 av	1 av	6.5 av	Semi Mature to Early Mature	Average	Indifferent	Predominantly clad and obscured by Ivy, unable to thoroughly inspect Cohesive linear group majoring on Field Maple Collection of moderate arboricultural quality	B12	6.6*
G17	Cherry Photinia Purple Plum	270# max	11.5 max					4.5 max	1.5# av	2# av	Semi Mature	Average	Indifferent	Inaccessible, situated offsite within neighbouring residential land Group of established ornamental plantings Unremarkable collection	C12	3.3

Tree Number	Common Species Name	Trunk Diameter (mm)	Height (m)	Crown Spread (m) N	E	S	W	Radial	First Significant Branch (m)	Crown Clearance (m)	Life Stage	Physiological Condition	Structural Condition	Comments	BS5837 Category	RPA Radius (m)
G18	Cherry	370# max	12 av					4.5 av	5 av	5 av	Early Mature	Average	Indifferent	Inaccessible, situated offsite within neighbouring residential land Linear group of Cherry Unremarkable collection	C12	4.5*
G19	Yew Cherry Laurel Holly	280# max	8 av					3.75 av	0.5 to 2	0.5 to 2	Semi Mature	Average	Indifferent	Inaccessible, situated offsite within neighbouring residential land Group of established ornamental plantings Unremarkable collection	C12	3.3
G20	Goat Willow Snowy Mespil Holly Hazel Beech	260# max	11 max					4.75 max	0.5 to 5	0.5 to 5	Semi Mature	Average	Indifferent	Inaccessible, situated offsite within neighbouring residential land Group of established ornamental plantings Unremarkable collection	C12	3*
G21	English Oak Beech Ash Hawthorn Holly	850# max	17 max					8.75 max	0.5 to 7#	0.5 to 7#	Semi Mature to Mature	Average	Indifferent to Good	Inaccessible, situated offsite within neighbouring residential land Structures appear typical for the species within current context Collection majoring on high quality individuals	A12	10.2*
G22	Holly Cherry Laurel Ash	75# av	7.5 max					3.5 max	0.5 av	0.5 av	Young	Average	Indifferent	Inaccessible, situated offsite within neighbouring residential land Readily replaceable at current size, low arboricultural value	C12	0.9
H1	Hawthorn Holly Privet	75 max	3 to 5.5					1.25 av	0.25 av	0.25 av	Semi Mature	Average	Indifferent	Partially maintained field boundary hedgerow	C12	0.9
H2	Ash Apple Beech Elder Hawthorn Hazel Holly Field Maple English Oak	100 av	1.5 av					1 av	0.5 av	0.25 av	Young to Semi Mature	Average	Indifferent	Maintained field boundary hedgerow	C12	1.2
H3	Beech Cherry Laurel Holly	100# av	4 av					1.25 av	0.5 av	0.5 av	Semi Mature	Average	Indifferent	Inaccessible, offsite within neighbouring residential land, unable to thoroughly inspect Maintained domestic hedgerow	C12	1.2
H4	Apple Blackthorn Dogwood English Oak Goat Willow Hawthorn Hazel	100 av	3 to 6					1.25 av	0.5 av	0.25 av	Young to Semi Mature	Average	Indifferent	Partially clad and obscured by Bramble Maintained field boundary hedgerow	C12	1.2

Tree Number	Common Species Name	Trunk Diameter (mm)	Height (m)	Crown Spread (m) N	E	S	W	Radial	First Significant Branch (m)	Crown Clearance (m)	Life Stage	Physiological Condition	Structural Condition	Comments	BS5837 Category	RPA Radius (m)
H5	Blackthorn English Oak White Poplar	75 av	2 to 4					1 av	0.25 av	0.25 av	Young to Semi Mature	Average	Indifferent	Partially managed field boundary hedgerow, maintained on lower canopies only	C12	0.9
H6	Blackthorn Hawthorn Spindle	75 av	4 av					1 av	0.5 av	0.5 av	Young to Semi Mature	Average	Indifferent	Partially maintained intermittent field boundary hedgerow	C12	0.9
H7	Privet	100# max	5 av					1.5 av	1 av	1 av	Semi Mature	Average	Indifferent	Maintained domestic hedgerow, defines boundary of neighbouring residential land	C12	1.2
H8	Lawson Cypress Cherry Laurel	3*100# av	5 av					1.25 av	0.5 av	0.5 av	Semi Mature	Average	Indifferent	Maintained domestic hedgerow, defines boundary of neighbouring residential land	C12	2.1
H9	Cherry Laurel	75# av	1.5 to 2.5					1 av	0.25 av	0.25 av	Semi Mature	Average	Indifferent	Maintained domestic hedgerow, defines boundary of neighbouring residential land	C12	0.9
H10	Field Maple Cherry Laurel Hawthorn Privet Holly Blackthorn	75# av	4 av					2 av	0.5 av	0.5 av	Semi Mature	Average	Indifferent	Maintained domestic hedgerow, defines boundary of neighbouring residential land	C12	0.9
H11	Lonicera Cherry Laurel Lawson Cypress Holly	120# av	2.5 av					1.5 av	0.5 av	0.5 av	Semi Mature	Average	Indifferent	Maintained domestic hedgerow, defines boundary of neighbouring residential land	C12	1.5
W1	Ash Cherry Elder English Oak Field Maple Hazel Holly	750 av	23 max					9 av	0.5 to 11	0.5 to 11	Young to Mature	Below Average to Average	Poor to Indifferent	Designated Ancient Woodland Provides canopy coverage along large section of sites southern boundary Structures typically etiolated within interior High arboricultural value	A123	9

APPENDIX D

TREE PROTECTION BARRIER SPECIFICATION

Recommended Tree Protection Fencing Specification for this Development

(Source: BS 5837: 2012)

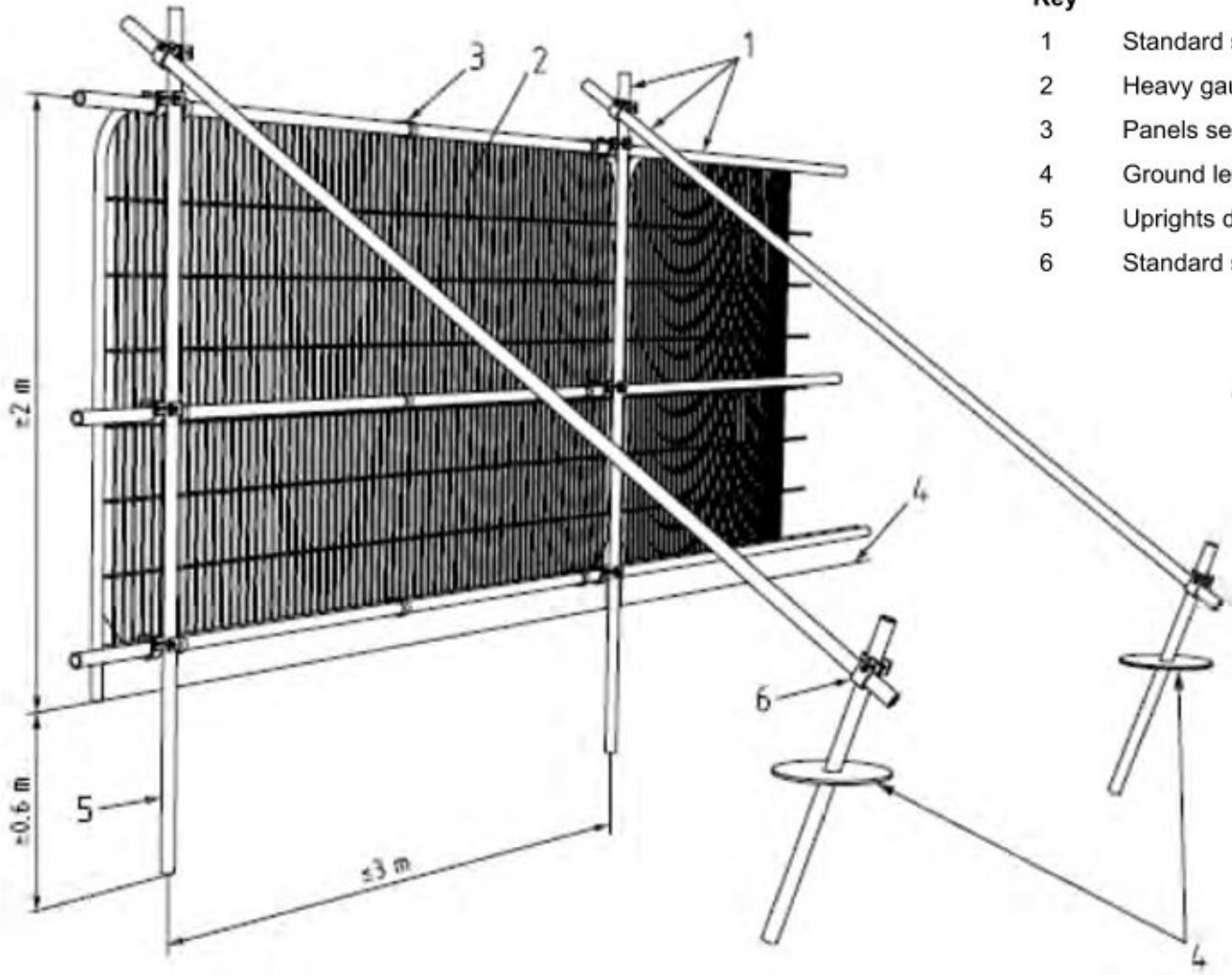

Key

1	Standard scaffold poles
2	Heavy gauge 2m tall galvanized tube and welded mesh infill panels
3	Panels secured to uprights and cross-members with wire ties
4	Ground level
5	Uprights driven into the ground until secure (minimum depth 0.6m)
6	Standard scaffold clamps

Notes:

- *Supports are to be sited tree side of the panel front face.*
- *All weather notices should be attached to every fourth panel highlighting the importance of the barrier in its correct position. An example is provided overleaf which may be duplicated for use on this development.*

aspect arboriculture

TREE PROTECTION BARRIER

- **DO NOT MOVE THIS FENCE**
- **NO SITE ACTIVITY TREE SIDE OF FENCE**
- **NO STORAGE TREE SIDE OF FENCE**

- **For assistance call Aspect Arboriculture:**

[redacted]

aspect arboriculture

landscape planning • ecology • arboriculture

aspect

Aspect Arboriculture Ltd
The Stables
Hardwick Business Park
Noral Way
Banbury
Oxfordshire OX16 2AF

[redacted]