Details - Building letters

b1 Building Letters - 800mm cap height

Action - New installation

Quantity existing 0 **Proposed** 1

Size

Overall 4664mm (w) x 955mm (h) x 100mm (d)
Cap height 800mm

Materials & colour

Face illuminated architectural letters. Face in Waitrose green (PMS370C) acrylic. Aluminium returns. Internally (static) illuminated to 18-22 Lumens by White Tetra minimax LED's.

Details

Fixed directly to rendered lobby structure.

Waitrose

Scale 1:100

b2 Building Letters - 400mm cap height

Action - New installation

Quantity existing 0 **Proposed** 1

Size

Overall 2332mm (w) x 477mm (h) x 50mm (d)
Cap height 400mm

Materials & colour

Face illuminated architectural letters. Face in Waitrose green (PMS370C) acrylic. Aluminium returns. Internally (static) illuminated to 18-22 Lumens by White Tetra minimax LED's.

Details

Fixed directly to rendered lobby structure.

Waitrose

Scale 1:100

b3 Building Letters - 400mm cap height

Action - New installation

Quantity existing 0 **Proposed** 1

Size

Overall 2332mm (w) x 477mm (h) x 50mm (d)
Cap height 400mm

Materials & colour

Face illuminated architectural letters. Face in Waitrose green (PMS370C) acrylic. Aluminium returns. Internally (static) illuminated to 18-22 Lumens by White Tetra minimax LED's.

Details

Fixed directly to rendered lobby structure.

Waitrose

Scale 1:100

b4 Building Letters - 900mm cap height

Action - New installation

Quantity existing 0 **Proposed** 1

Size

Overall 5247mm (w) x 1078mm (h) x 113mm (d)
Cap height 900mm

Materials & colour

Face illuminated architectural letters. Face in Waitrose green (PMS370C) acrylic. Aluminium returns. Internally (static) illuminated to 18-22 Lumens by White Tetra minimax LED's.

Details

Mounted above existing roof line.
Use of existing structure subject to intrusive survey.

Waitrose

Scale 1:100

Waitrose

Artwork - NTS

ARUN DISTRICT COUNCIL R/95/15/A
(C) Copyright Integrity UK Ltd 2015

Integrity

Details - Signage

19 Car Park Directional - 902mm wall mounted

Action - New installation

Quantity existing 0 **Proposed** 1

Size

Panel 902mm (w) x 1400mm (h) x 40mm (d)

Materials & colour

Aluminium panels painted Waitrose green (PMS 370C) with white vinyl graphic to face.

Details

Installed 2250mm AFFL to top of panel



Artwork - NTS



Scale 1:50

8 Parking reminder - 528mm wall mounted

Action - New installation

Quantity existing 0 **Proposed** 1

Size

Panel 528mm (w) x 820mm (h) x 40mm (d)

Materials & colour

Aluminium panel painted RAL 7015 with white vinyl graphic to face.

Details

Installed 1750mm AFFL to top of panel

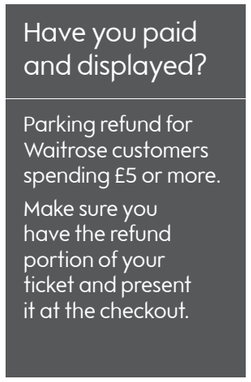

Artwork - NTS



Scale 1:50

JC JC Decaux

Action - New installation

Quantity existing 0 **Proposed** 1

Size

Overall 1385mm (w) x 2720mm (h) x 205mm (d)

Materials & colour

Internally illuminated. Galvanised steel and aluminium chassis.

Details

To be implemented post re-launch subject to foot fall.

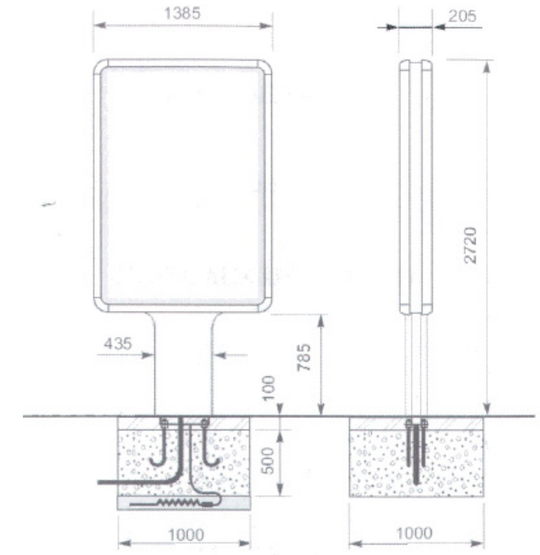

Artwork - NTS

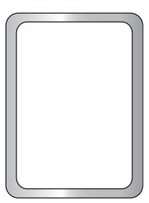

Visual - Not to scale

12 Trolley warning - wall mounted

Action - New installation

Quantity existing 0 **Proposed** 1

Size

Panel 250mm (w) x 330mm (h) x 30mm (d)

Materials & colour

Aluminium panels painted RAL 7015 with white vinyl graphic to face.

Details

Installed 1300mm AFFL to top of panel

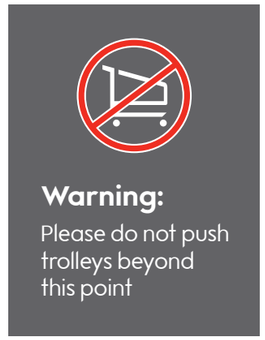

Artwork - NTS



Scale 1:50

ARUN DISTRICT COUNCIL R/95/15/A
© Copyright Integrity UK Ltd 2015

Details - Signage

13 Stainless steel branch header - 1500mm

Action - New installation

Quantity existing 0 **Proposed** 2

Size

Overall 1500mm (w) x 544mm (h) x 45mm (d)

Materials & colour

Stainless steel faced non illuminated letters.

Details

Installed 1200mm AFFL to bottom of sign.



Artwork - NTS



Scale 1:50

14 Shopping hours vinyl - 450mm (w)

Action - New installation

Quantity existing 0 **Proposed** 2

Size

Panel 450mm (w) x 600mm (h)

Materials & colour

Double sided Waitrose Green (PMS 370C) shopping hours vinyl with white text.

Details

Installed 1750mm AFFL to top of shopping hours vinyl



Front



Rear

Artwork - NTS



Front

Rear

Scale 1:50

15 Safety manifestation

Action - New installation

Quantity existing 0 **Proposed** 2

Size

Overall 20000mm (w) x 150mm (h) across two elevations

Installation

Applied to glazing on new doors.

1500mm to top of band A.
1000mm to top of band B.



Artwork - NTS

16 Product vinyl

Action - New installation

Quantity existing 0 **Proposed** 2

Size

Overall dimensions subject to survey

Materials & colour

Digitally printed vinyl applied internally to glazing and backed up with white board.

Details

Split across two windows

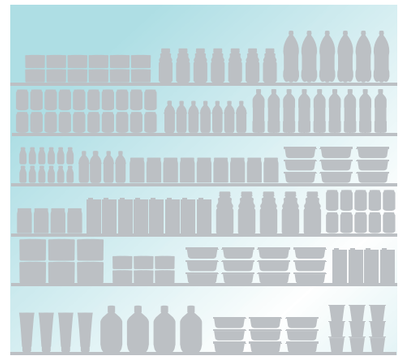

Artwork - NTS

ARUN DISTRICT COUNCIL R/95/15/A

(C) Copyright Integrity UK Ltd 2015

Details - Signage

17 Dog stop

Action - New installation

Quantity existing 0 **Proposed** 2

Size

Panel 150mm (w) x 150mm (h) x 10mm (d)

Materials & colour

Aluminium panels painted Waitrose green (PMS 370C) with white vinyl graphic to face. First panel mechanically fixed to wall and graphic panel bonded to this.

Details

Installed 500mm AFFL to top of dog stop



Artwork - NTS



Scale 1:10

ARUN DISTRICT COUNCIL R/95/15/A

© Copyright Integrity UK Ltd 2015