ELTA FANS

DEMAND CONTROL VENTILATION

POWERPLUS

ARUN DISTRICT COUNCIL R/35/17/DOC

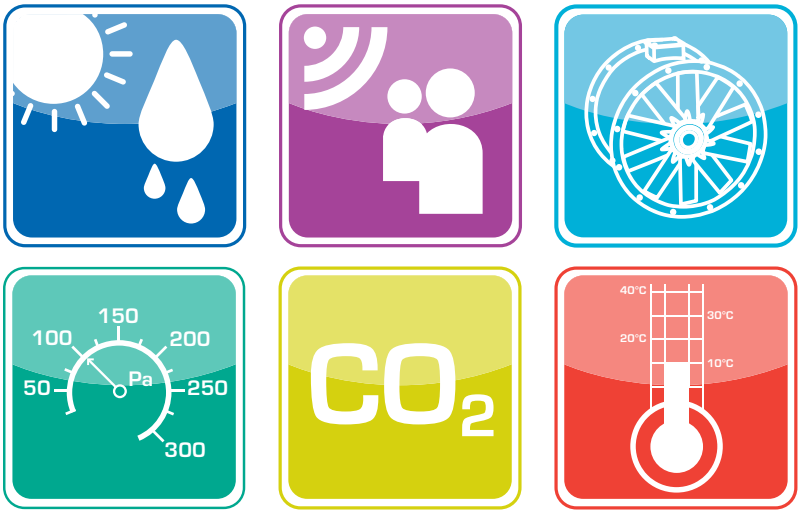

DEMAND CONTROL VENTILATION

Contents

Features & Benefits 4-5

Here the principle features and benefits are clearly identified.

Applications 6-9

Typical applications for the Elta PowerPlus including two installation case studies.

Controls & Sensors 10

The PowerPlus range are suitable for operation via the Eltadrive range of frequency inverters which can be controlled by the DCV range of sensors.

Energy Saving Calculator 11

A simple example illustrating potential savings in energy and operating costs.

Specification 12

An easy to follow indication of the specifications for the component elements of the PowerPlus range of axial flow fan units.

Elta Fans Eco-Statement

Elta Fans is fully committed to the reduction of carbon footprints in new and existing buildings, by using higher efficiency and lower energy products, components and control systems.

Recent and developing legislation highlights our need for faster and high quality product and system development in the important area of energy conservation. Demand Control Ventilation (DCV) is an effective way of applying our philosophy as it allows variable ventilation solutions to be efficiently applied to variable occupancy spaces in buildings.

Reductions in noise ratings, cable sizes and the total amount of energy usage are very important factors, both for customers and our product development programs. Our goal is to provide high quality, energy efficient products with a cost effective ventilation solution.

Elta Fans continues to develop DCV solutions in conjunction with constant improvements to our product range in order to provide a benefit to customers and their buildings.

Technical Data 13

A clear, comprehensive compilation of the technical data (noise and performance data tables) and pressure versus volume curve for each size and motor option available.

Dimensional Data 14

Tables and diagrams to indicate the dimensional details for each size of unit.

Wiring Diagrams 15

Clear wiring diagrams for the two motor connection options.

Silencers 16-17

Silencer construction, insertion loss and dimensional details.

Accessories 18-19

A wide range of accessories that will compliment the PowerPlus unit and provide a wide range of solutions.

DEMAND CONTROL VENTILATION

Features & Benefits

The PowerPlus range has been specifically developed to tackle higher pressure requirements with a straightforward, efficient and definitive approach.

The totally enclosed air over motors, along with their low profile robust U-shaped mounting brackets allow for maximum open area, reducing velocities through the fan casing and resulting in increased efficiency and a reduction in noise and vibration levels.

Three phase motors have been specifically selected to provide a more efficient and reliable option than can be obtained by using traditional single phase capacitor start and run motors.

For added ease and flexibility of selection the units are electrically wound for 400V Star / 230V Delta making them suitable for use with the pre-programmed Eltadrive E2 400V three phase supply or 230V single phase supply frequency inverters. This compatibility satisfies the specific requirements of DW172.

“Regulation of air flow by variable speed control.”

The resilient two stage contra-rotating axial fan is housed in a single robust casing, with both motors wired via a flexible weatherproofed cable system to a single IP55 terminal box mounted on the outside of the casing. This feature adds to the installer friendly ethos of the unit ensuring accessibility and faster wiring of the unit, making it more effortless to handle and install than conventional two staged fans.

Efficient and cost effective

High efficiency impellers coupled with the speed controllable motors through the Eltadrive E2 inverters makes this a very economical method of moving high volumes of air at moderate pressures.

Combined with our dedicated range of Variable Speed Drives, energy consumption can be dramatically reduced during idle periods where ventilation systems can be safely turned down. Lowering the speed of the motor by just 20% can produce an energy saving of up to 50% offering a swift return on your investment.
Our Energy Savings Calculator on page 11 demonstrates in further detail the potential savings available.

Material Strength

Constructed from robust heavy gauge sheet steel, the roll formed, welded casing includes integral spun flanges for a smoother airflow.

Quality impeller design

Comprising Elta Fans tried and trusted adjustable pitch aerofoil section blades. Constructed from high quality pressure die cast aluminium components and factory set at an angle to maximize efficiency and performance for the 2 stage contra rotating impeller assemblies. Dynamically balanced to ISO 14694.

Optimum choice availability

The PowerPlus range comprises four standard sizes 450mm, 500mm, 560mm and 630mm diameter. Fully speed controllable for flexibility in performance with an extensive duty range up to 3.92 m^3/s.

Outstanding performance

The usage of robust three phase motors, coupled with inverter soft starts, reduces wear and tear and prolongs the motor life.

Installer Friendly Simplicity

With ease of access for wiring to the externally mounted terminal box, pre-programmed inverters and ex-stock availability the PowerPlus is the ideal choice for installers.

Tested to the very latest standards

The PowerPlus range has been extensively tested to ISO 5801:2007 (airside performance) and to BS 848 Pt 2:1985 (sound performance) at Elta Fans own test facility, meaning accurate, up-to-date information on performance and noise data that can be relied upon.

Full accessory range

Full accessory range available – All selected in advance to match the fan, helping to avoid on site installation problems.

Warranty

Each PowerPlus unit has a 12 month warranty.

DEMAND CONTROL VENTILATION

Applications

Case Study

Three Crowns, Chagford, Devon

In September 2009, established publicans John Milan and Steve Bellman, in a joint venture with St. Austell Brewery, purchased The Three Crowns, an impressive 13th century granite inn at Chagford, a small town and thriving community on the north-east edge of Dartmoor, in Devon, England, close to the River Teign. They immediately embarked on a long-term project to restore the High Street inn to its former glory. Refurbishment work on bedrooms in the old part of the building revealed a number of old features. A listed staircase, dating back to 13th century, has been restored and early, lime-plastered walls and elm floorboards have also been revealed and repaired. The granite façade of the building, famous for its picturesque 'lean' into the street, also received some remedial attention.

The inn has a busy, popular restaurant open for lunch and dinner all week and seating 80 diners, along with a function room accommodating up to 100 people. Work included improvements to the kitchen, where the main extraction system was replaced by specialist ventilation contractor, Partridge Ventilation of Redruth, ably assisted by Elta Fans.

A PowerPlus SPP500/4-3 fan was fitted, fully encased, in a system that involved special, fire-proofed ducting because of the fire hazard presented by the thatched roof of the building. The fan is three-phase supply and required the fitting of a 1-3 phase frequency inverter, programmed to provide minimum and maximum speeds to control duty point against noise levels.
The inverter also provides overload protection for the system and facilitates integration with the gas control panel.

Elta Fans' system is an effective and very efficient means of ensuring that a kitchen is ventilated cost effectively while maximising air quality. Significant energy savings can be made by matching the ventilation rate to the occupancy level of a restaurant or the cooking level of a commercial kitchen. But, as well as the amount of energy used, reductions in noise ratings, cable sizes and CO_2 emissions are also easily achievable.

Three Crowns' Manager, Mr. Andy Bonsall has observed: "The kitchen is busier than ever and is now noticeably much, much cooler. Working conditions are far more pleasant, not only because of the lower temperatures and improved airflow, but also because the system is much quieter than was previously the case. And the unit and controllers are simple to understand and couldn't be easier to use."

The Three Crowns' menu changes daily and the chef, Tony Carr, and his team are committed to exploring the range and quality of local, fresh seasonal produce, sourcing the best meat, game and fish in the area to provide an exquisite dining experience in nostalgically British surroundings.

Contractors, Partridge Ventilation, have worked closely with Elta Fans on several other prestigious kitchen installations, including Rick Stein's seafood restaurant in Padstow.

Case Study

The Stag Inn, Mentmore, Buckinghamshire

The Stag Inn at Mentmore, in Buckinghamshire is a very popular and highly successful pub and 60 seater restaurant with a well-deserved reputation for fine cuisine and service. Offering a distinctive fusion of British and Mediterranean cuisine, head chef and co-owner, Mani Rebelo uses only fresh, seasonal produce, humanely reared meats and fish from sustainable sources, whenever possible.

Elta Fans distributor Systemair Fans and Spares of Nottingham specified and supplied the installers of the ventilation system with an SPP 630 fan from the new PowerPlus range with a pre-programmed Eltadrive E2 single to three-phase frequency inverter (along with the canopy size and ductwork layout required). Steve Wilde, Sales Manager at the Nottingham office comments: "The PowerPlus and Inverter package was by far the best option on the market to meet the requirements of the busy kitchen and reduce energy consumptions and overheads for the owners."

Today the village of Mentmore retains much of its Victorian character, looking very much as it did when the village was completed in the late nineteenth century. Rich with history and atmosphere, The Stag Inn is situated in the heart of the Aylesbury Vale countryside, in the midst of a conservation area – which meant that there were strict restrictions on the ventilation stacks that were part of the extension work to the kitchen. "Limitations on ventilation stacks and building amends impacted on the specification process but Elta Fans sales team were very helpful throughout"

The PowerPlus range has been primarily designed to accommodate these conditions and high-pressure requirements. The totally enclosed, air-over motors allow for maximum open area, reducing velocities through the casing, increasing efficiency and resulting in a reduction in noise and vibration levels. The two stage contra-rotating axial fan is housed in a single casing, with both motors wired via a flexible weatherproofed cable system to a single IP55 terminal box mounted on the outside of the casing. This ensures faster wiring of the unit making it easier to handle and install than conventional two-staged fans.

By integrating a range of sensors, ensuring the levels of smoke, expanded air, steam, cooking odours and exhaust fumes from appliances, are maintained at all times, it was possible to create a very efficient and economical kitchen ventilation system for the upgraded kitchen.
Head Chef, Mani Rebelo commented "The kitchen is a much improved place to work with reduced noise levels and better air quality"

Nigel Bradshaw, manager at The Stag is delighted with the upgraded equipment and the service from Elta Fans; "They have been so attentive, ensuring every step of the process to upgrade the system from specification to post installation follow up, has run smoothly, we cannot thank them enough"

DEMAND CONTROL VENTILATION

Applications

Kitchen Extract

The industrial or commercial kitchen with their various arduous ventilation systems have relatively high resistances against which a fan has to operate. The varying cooking and heat loads are an ideal platform for demonstrating how to utilise Elta Fans full range of products. By utilising sensors, the levels of smoke, expanded air from the heat load, moisture consisting of steam, grease and cooking odours and exhaust fumes from combustion appliances such as gas, charcoal or mesquite, are maintained within set levels at all times. This ensures a very efficient and economical kitchen ventilation system.

Below shows an example for a typical kitchen ventilation system comprising of the main cooking area, wash area extraction system, and the supply make up system, designed in accordance with the DW172 specification.

The main cooking extraction systems are subject to conditions normally between 40°C and 60°C at 95% relative humidity within a typical kitchen environment. The PowerPlus range of fans has been primarily designed to accommodate these conditions.

For applications such as the wash extract or where the cooking equipment produces higher temperature levels, then the QUBe-HT range with its motor out of airstream would be better suited.

The PowerPlus and the QUBe-HT are both suitable for speed control when used with the Eltadrive range of frequency inverters.

The dedicated make up air system should be 85% of the total extract flow rate, and should be conditioned with a minimum supply temperature of 16°C, with the remaining 15% infiltrating naturally. The best way to achieve this is by using the QuietFlowDCV range of fans.

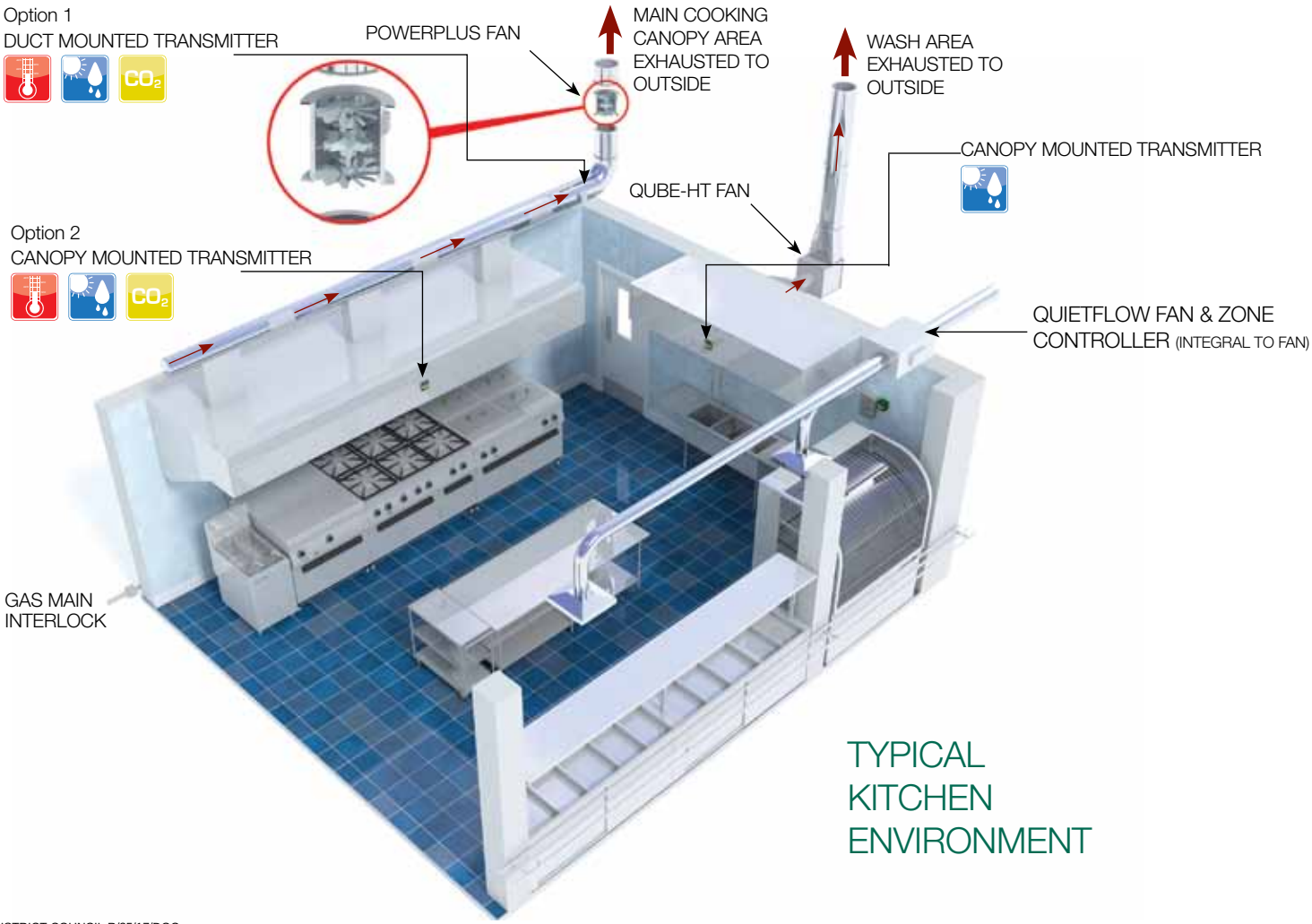

TYPICAL KITCHEN ENVIRONMENT

Constant Pressure Fresh Air Supply System

Below shows an example for a constant pressure office ventilation supply system, having relatively high resistances against which a fan has to operate. The system comprises of an acoustic intake louvre, filter panel and heater battery at the beginning of a moderate run of ducting, coupled with numerous attenuators and terminating at the supply diffusers. The automatic dampers are operated via the presence detectors.

The PIR sensors detect movement in the offices, in turn opening the relevant damper above the supply diffuser, thereby reducing the pressure drop in the system.

The pressure sensor mounted by the fan senses in real time the drop in pressure. The pre-programmed DCV zone controller increases the speed of the PowerPlus fan, through the Eltadrive range of frequency inverters. The volume of air supplied increases, matching it to the occupied office space.

TYPICAL OFFICE ENVIRONMENT
(Supply System only shown)

DEMAND CONTROL VENTILATION

Controls & Sensors

Demand Control Ventilation or DCV, is a technological innovation that provides an effective, efficient means of using variable speed ventilation solutions to meet variable occupancy levels. Building ventilation system rates are based on maximum occupancy, therefore are traditionally very wasteful.

The most advantageous benefit of using the DCV system is the reduction in energy wastage, not just from the fan operation itself, but compounded by the energy required to condition that air, resulting in the reduction of CO_2 emissions and in some cases significant savings in running costs.

At the heart of the Elta Fans DCV system is the Zone controller, designed to monitor and control one or more fan units simultaneously, with 6 pre-programmed fan applications.

Each application has factory set parameters (input value range, set-points, P-band, min and max speeds) and control function. All of which can be changed in field via the Room Controller (RC unit), which is connected via a SELV cable and incorporates a digital display.

The DCV systems various sensors provide continuous real time feedback monitoring of the ambient air conditions through, temperature, humidity, CO_2 or pressure in the occupied space.

The DCV unit is normally fitted directly to a fan, but can also be retrofitted and used in conjunction with the Eltadrive range of inverters, to accommodate your on-site requirements.

Control Functions

- Remote enable (BMS)
- Trickle and Boost
- Damper operation
- Heater battery operation
- Fan run status (Fan fail)
- Control input signal
- Manual speed control
- Master / Slave fan operation
- Twin fan operation (c/w 6 Hour duty share change over)
- Min/max speed settings for master or slave fans

Applications

- Humidity 30% through 95%RH
- Voltage 0-10V input (i.e BMS)
- Pressure 0 through 1000Pa
- CO_2 0 through 2000ppm (P-band)
- Temperature +5°C through 30°C
- Manual Speed Control

ELTA DRIVE INVERTERS

Variable Speed Drives, also known as Inverters, are now a common feature in the control of ventilation fans. The main reasons for this are cost savings through reduction in energy usage at reduced fan speeds and the ability to control the fan via sensors to offer demand control ventilation.

It is common practice for system designers to select fans to perform either in excess of the ventilation rates required or solely based on the maximum rate needed for a short duration. Reducing the speed of the fan via an inverter when the maximum ventilation rate is not needed can reduce the power consumed and provide significant savings.

Reducing energy usage also cuts CO_2 emissions, a major contributor to climate change and the dramatic effects on our environment.

The Eltadrive range of inverters has been designed to meet the rigorous demands of industry and applicable legislation encompassing the latest technology, combining robustness with reliability.

For further details or to request a copy of the Eltadrive Brochure please contact Elta Fans.

Features & Benefits

- IP55 and IP20 duties available
- Single or three phase options available
- Small mechanical envelope for ease of installation
- Simple mechanical and electrical installation
- Integral RFI filter
- Rugged industrial 50°C ambient rating
- Simple operation, powerful features easy to use
- Up to 11 size and input variants available
- The Eltadrive product range conforms to the low voltage directive and to EN 61800-5-1:2003, EN 61800-3-2nd Ed:2004 and EN 55011:2007
- Designed and manufactured with procedures as defined in BS EN ISO 9001:2000
- 14 basic parameters for ease of set up
- Cost effective - Eltadrive Inverters can reduce the number of control and protection devices needed in a complete installation as well as providing the opportunity to reduce energy consumption
- Eltadrive's are available on 'Next Day' delivery

DEMAND CONTROL VENTILATION

Energy Saving Calculator

In support of our dedication to managing and maintaining our natural resources the PowerPlus offers outstanding reductions in energy consumption when combined with the unique Eltadrive inverters. This reduction in consumption equates to substantial savings for the end user within a short time scale.

Where an ac induction motor is used to drive a fan impeller, the mechanical power needed is proportional to the cube of the flow rate or speed.

This means that a 20% reduction in fan speed would result in a 50% reduction in the mechanical power required.

To calculate the level of actual savings in cost, it is possible to obtain guidance with the following information:-
Motor Input Power, Motor Efficiency, Operating Time and Cost of electricity per kWh

Example 1:

An SPP630/4-3 is selected at full speed to operate at 3.27m³/s @ 350Pa.

Motor Input Power = Output kW ÷ Motor Efficiency
2.2 ÷ 0.785 = 2.8kW

Operating Time: 2080hrs
(8hrs/day x 5 days/wk x 52 weeks/yr)

Electricity cost: £0.09 per kWh

Annual Operating Cost =
Motor input power x operating time x electricity cost
2.8 x 2080 x 0.09 = £524

After further investigation it is shown that the required flow rate can be reduced by 20% averaged over the week - see Example 2.

Example 2:

Using a VSD operating the fan at 80% flow reduces the input power to 51%

Motor Input Power = Output kW ÷ Motor & Inverter Efficiency
2.2 ÷ 0.785 = 2.8kW

Operating Time: 2080hrs
(8hrs/day x 5 days/wk x 52 weeks/yr)

Electricity cost: £0.09 per kWh

Annual Operating Cost =
Motor input power x reduction in input power
x operating time x electricity cost
2.8 x 0.51 x 2080 x 0.09 = £267

Reduction: £524 - £267 = £257

The reduction in input power by use of the VSD equates to an energy saving cost of £257 per annum. The chart shown here offers further guidelines as to the potential savings available. For an accurate calculation of cost savings please contact Elta Fans.

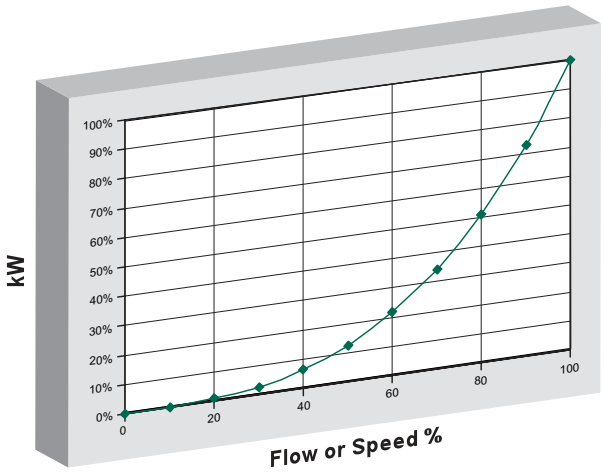

Inverter Codes

Product Code	Inverter Controller 3PH-3PH IP55	Inverter Controller 3PH-3PH IP20	Inverter Controller 1PH-3PH IP55	Inverter Controller 1PH-3PH IP20
SPP450/4-3	149-ODE-2-14075-3KA1S	149-ODE-2-14075-3KA12	149-ODE-2-12075-1KB1S	149-ODE-2-12075-1KB12
SPP500/4-3	149-ODE-2-14150-3KA1S	149-ODE-2-14150-3KA12	149-ODE-2-12150-1KB1S	149-ODE-2-12150-1KB12
SPP560/4-3	149-ODE-2-14150-3KA1S	149-ODE-2-14150-3KA12	149-ODE-2-12150-1KB1S	149-ODE-2-12150-1KB12
SPP630/4-3	149-ODE-2-24220-3KA1S	149-ODE-2-24220-3KA42	149-ODE-2-22220-1KB4S	149-ODE-2-22220-1KB42

DEMAND CONTROL VENTILATION

Specification

Motors

Motors are totally enclosed, airstream rated induction motors with sealed for life, maintenance free ball bearings, which allows the fan to be installed at any angle. Each motor is matched to the aerodynamic performance of the impeller. Motors are Class F insulated to EN 60034-5, protected to IP55 and suitable for inverter speed control. Motors are suitable for 230V Delta and 400V Star connection.

Fans are suitable for operating temperatures between -20°C and +70°C. Electrical connection to the motor is provided by an IP55 terminal box which is fitted onto the outer side of the fan casing.

Casing

The all metal fan casing provides a long lasting and robust construction. The units have been constructed from a single sheet of steel, with both motors and axial impellers mounted within the length of the unit casing.

All casing parts are heavy gauge mild steel sheet, roll formed and welded for added strength and durability, hot dipped galvanised to BS EN ISO 1461:1999 after fabrication and drilled to BS ISO 6580:2005. The fans are suitable for external mounting as standard.

Impellers

Adjustable pitch aerofoil impellers are provided with blades made from high quality die cast aluminium (LM6).
Impellers are factory set at an angle to provide maximum performance and efficiency across the duty range. The hubs are manufactured from die cast aluminium alloy (LM24) All impellers are to be dynamically balanced to ISO 14694.

Quality Management

Units are to be designed and manufactured with procedures as defined in BS EN ISO 9001: 2008.

All PowerPlus units are to be tested to ISO 5801:2007 (airside performance) and BS 848 Part 2: 1985 (sound performance).

Controls Elements

The PowerPlus range of fans are suitable for operation via the Eltadrive range of frequency inverters. The frequency inverters can be controlled by the Elta DCV controller and appropriate range of sensors.

DEMAND CONTROL VENTILATION

Technical Data

Product Code	r/min	Airflow/ SFP	Airflow m³ / s @ Static Pressure Pa													
			0	50	100	150	200	250	300	350	400	450	500	550	600	650
SPP450/4-3	1410	m³ / s	1.724	1.673	1.617	1.548	1.464	1.375	1.283	1.128						
		W / (L/s)	0.38	0.42	0.46	0.52	0.59	0.66	0.74	0.84						
SPP500/4-3	1390	m³ / s	2.278	2.213	2.143	2.063	1.975	1.882	1.783	1.66						
		W / (L/s)	0.41	0.45	0.50	0.55	0.61	0.67	0.74	0.82						
SPP560/4-3	1400	m³ / s	2.846	2.758	2.672	2.586	2.496	2.398	2.286	2.148	1.949	1.587	1.258	1.01		
		W / (L/s)	0.41	0.47	0.52	0.57	0.62	0.67	0.73	0.80	0.90	1.10	1.36	1.69		
SPP630/4-3	1450	m³ / s	3.927	3.844	3.76	3.674	3.585	3.489	3.385	3.269	3.137	2.979	2.778	2.499	2.073	1.641
		W / (L/s)	0.40	0.45	0.50	0.54	0.59	0.63	0.68	0.73	0.79	0.85	0.93	1.04	1.24	1.53

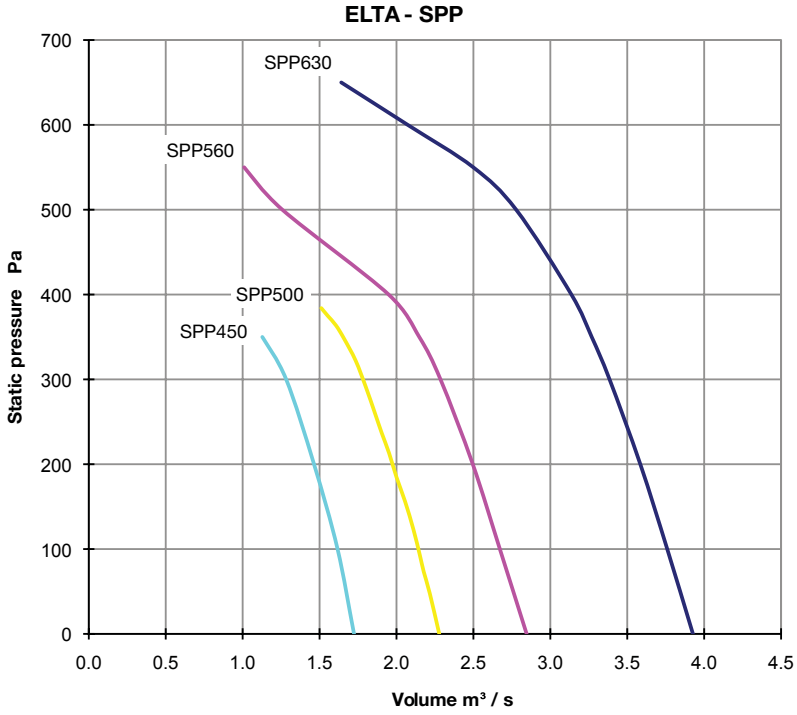

Product Code		Sound Power Level dBW @ Octave Band Hz								dBA @ 3m	Input Amps #	Output kW	230V/3/50Hz		400V/3/50Hz	
		63	125	250	500	1k	2k	4k	8k				FLC	SC	FLC	SC
SPP450/4-3	Inlet	71	72	81	78	74	70	64	58	59	4.1	0.74	3.1	14.5	2.0	9.8
	Outlet	70	72	81	76	75	72	68	61	59						
SPP500/4-3	Inlet	76	76	83	81	79	76	71	64	63	5.7	1.1	4.5	20.4	2.8	13.9
	Outlet	77	77	83	80	80	78	74	68	64						
SPP560/4-3	Inlet	81	80	85	84	83	81	77	70	67	7.6	1.5	5.6	26.3	3.7	19
	Outlet	83	81	85	85	84	83	80	73	69						
SPP630/4-3	Inlet	85	85	89	90	87	85	81	75	72	11.6	2.2	8.7	42.1	4.8	31.2
	Outlet	87	85	89	90	88	88	84	79	73						

SFP = Specific Fan Power in Watts per litre per second.
# Total input amperes into Inverter @ 230/1/50 supply.
Performance data is based on tests carried out in accordance with ISO 5801:2007 (airside performance).
Acoustic data: tests and preparation of the data have been carried out in accordance with BS848 Part 2 (1985). The In-duct Sound Power Level Spectra are in dB re 1pW. The overall A-Scale sound pressure level is at a distance of three metres with spherical propagation. It is expressed in dB re 20µPa and is presented for comparative purposes only as in practice the semi-reverberant nature of any installation and directivity effects can give a different value.

Elta Fans Limited has a policy of continuous product development and improvement and therefore reserves the right to supply products which may differ from those illustrated and described in this publication.
Confirmation of dimensions and data will be supplied on request.

DEMAND CONTROL VENTILATION

Dimensional Data

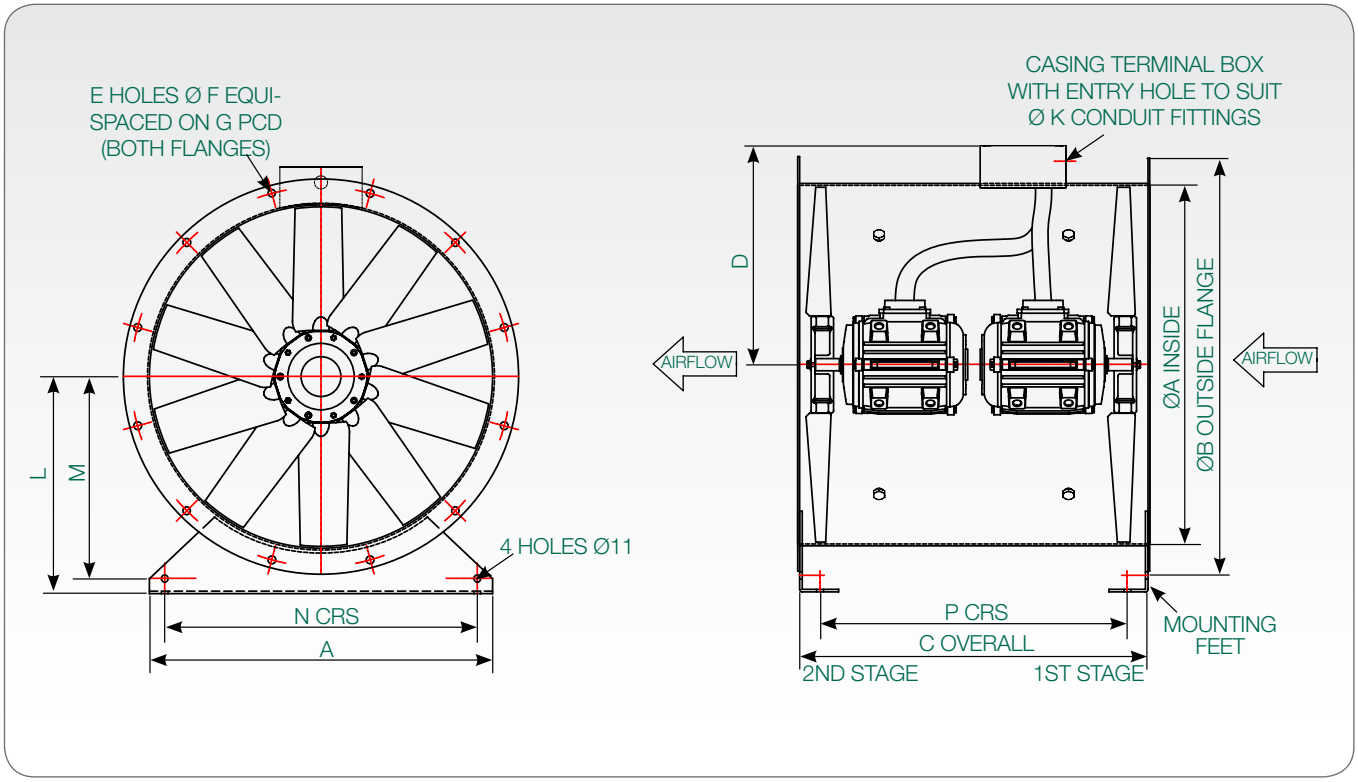

Model	A	B	C	D	E	F	G	K	L	M	N	P	Weight kg
SPP450/4-3	450	530	500	285	8	12	500	20	280	255	400	439	42
SPP500/4-3	500	585	550	315	12	12	560	20	315	290	450	489	53
SPP560/4-3	560	645	550	345	12	12	620	20	355	330	510	480	59
SPP630/4-3	630	715	600	380	12	12	690	20	400	375	580	530	83

• All dimensions are in mm
* Weight does not include mounting feet

Elta Fans Limited has a policy of continuous product development and improvement and therefore reserves the right to supply products which may differ from those illustrated and described in this publication. Confirmation of dimensions and data will be supplied on request.

Wiring Diagrams

DELTA Connection

220V TO 240V 3Ph 50Hz

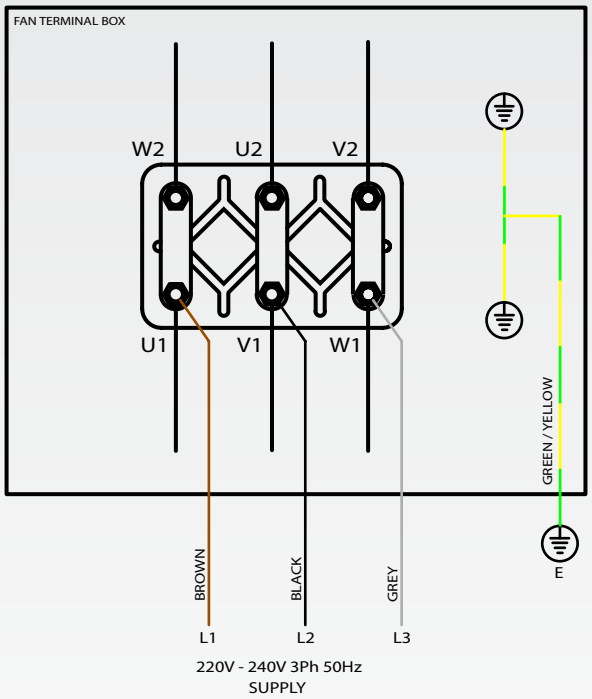

To reverse impeller rotation swap any two phase wires.

Suitable for use with Eltadrive range of Inverters

STAR Connection

380V TO 440V 3Ph 50Hz

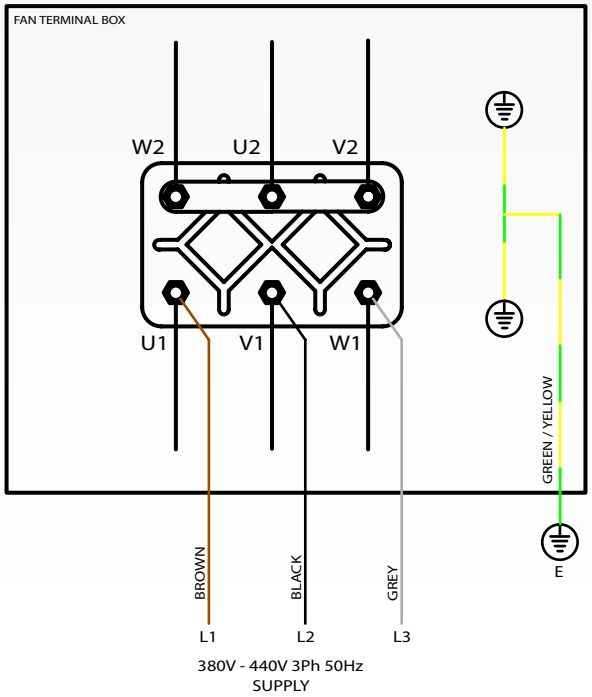

DEMAND CONTROL VENTILATION

Silencers

Elta are able to provide 2 types of cylindrical silencers as standard; Type DENP (without pod) and DEP (with pod).

Construction

Both types are rigidly constructed in galvanised sheet steel, with a highly absorbent sound attenuating lining between the outer casing and the inner perforated steel lining. The end faces of the silencer has a series of threaded holes for direct mounting to the fixing flange/ flexible collar. The DEP (podded versions) will provide an improved level of attenuation. The inner acoustic pod is constructed from perforated steel sheet with a sound absorbent infill.

Melinex lined silencers must be used to prevent grease impregnation into the acoustic media for kitchen extract applications as prescribed in DW/172 HVAC Specification For Kitchen Ventilation Systems.

3 options of each type can be provided with differing lengths:

1D = 1 times fan diameter,
1.5D = 1.5 times fan diameter (manufactured to order)
2D = 2 times fan diameter.

Silencer Attenuation

To determine the sound level of a fan fitted with a silencer, the dynamic insertion loss should be subtracted from the sound power level spectrum (dBW) of the PowerPlus fan. This should be done for the entire octave band mid-frequency spectrum tabulated on page 17.

The fan dBW ratings and silencer attenuation apply equally to in duct applications, with a silencer connected between the fan and the duct system.

Dynamic Insertion Loss

The silencer attenuation is defined as the “dynamic insertion loss”. The values quoted in the table [opposite-above] represent the difference between the sound power level of a fan and silencer combination (dBW) and that of the fan alone (dBW).

The dynamic insertion losses shown are the attenuations recorded under ideal working conditions. The achieved attenuation will vary according to the air velocity and flow pattern in the airways. Noise regeneration can occur at higher velocities, especially in DEP silencers.

Splitter Silencers

In highly noise sensitive areas, where the circular silencers cannot achieve the necessary attenuation levels, Elta can design and build optional splitter silencers for greater effect.

Dynamic Insertion Loss

Fan Sizes	Silencer Length	Silencer Type	Insertion Loss @ Octave Band Hz							
			63	125	250	500	1k	2k	4k	8k
450 - 560	1D	ENP	-2	-5	-6	-9	-13	-11	-6	-6
		EP	-4	-6	-8	-11	-18	-19	-17	-14
	1.5D	ENP	-3	-6	-9	-13	-18	-14	-9	-8
		EP	-5	-8	-10	-16	-22	-22	-20	-18
	2D	ENP	-4	-8	-12	-17	-23	-17	-12	-10
		EP	-7	-10	-12	-21	-26	-26	-24	-22
630	1D	ENP	-3	-4	-9	-15	-15	-8	-7	-6
		EP	-4	-6	-8	-17	-23	-20	-18	-10
	1.5D	ENP	-4	-6	-11	-18	-18	-10	-9	-7
		EP	-6	-8	-12	-22	-27	-25	-23	-14
	2D	ENP	-6	-8	-13	-22	-22	-13	-12	-9
		EP	-8	-11	-16	-27	-32	-31	-29	-19

End Reflection Values

Fan Sizes	End Reflection @ Octave Band Hz							
	63	125	250	500	1k	2k	4k	8k
450	12	7	3	0	0	0	0	0
500	11	6	2	0	0	0	0	0
560	10	6	2	0	0	0	0	0
630	9	4	1	0	0	0	0	0

End Reflection Values

Where a silencer is connected directly to a free inlet or free outlet side of a fan some of the low-frequency sound energy will be reflected back into the duct. The values in the table above show the additional attenuation in each octave band in this case.
It should be noted that this data is based on theoretical considerations only, and assumes spherical free-field conditions.

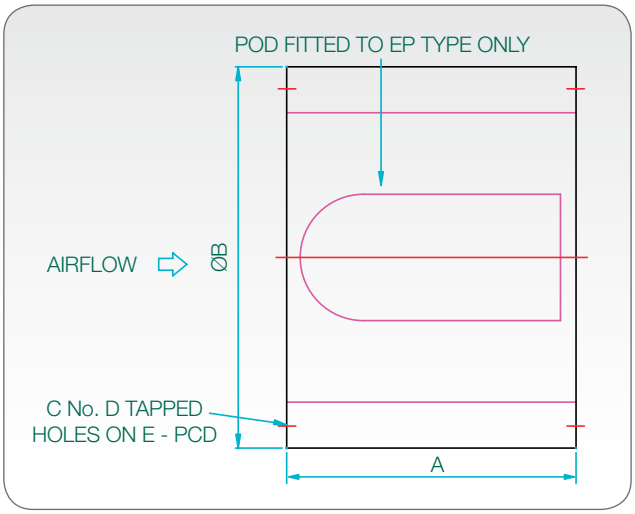

Product Code	Fan Dia	A 1D	A 2D	B	C	D	E	Weight kg					
								1DENP	1DEP	1.5DENP	1.5DEP	2DENP	2DEP
068-0450-*D**P	450	450	900	602	8	M10	500	15	18	27	31	27	31
068-0500-*D**P	500	500	1000	652	12	M10	560	18	22	32	37	32	37
068-0560-*D**P	560	560	1120	712	12	M10	620	22	26	39	46	39	46
068-0630-*D**P	630	630	1260	782	12	M10	690	26	32	48	57	48	57

1, 1.5 or 2 — See Dim A

E - With Pod or EN - Without Pod

• All dimensions are in mm

Elta Fans Limited has a policy of continuous product development and improvement and therefore reserves the right to supply products which may differ from those illustrated and described in this publication. Confirmation of dimensions and data will be supplied on request.

DEMAND CONTROL VENTILATION

Accessories

Impeller Guards

Bright zinc plated steel or galvanised, Fix with clips & screws (included).

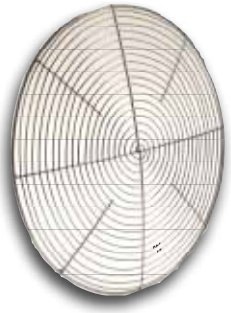

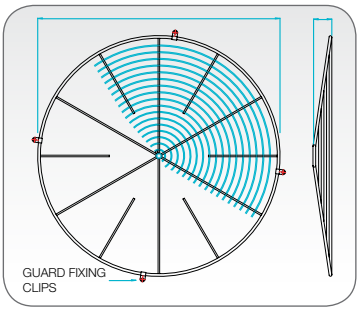

Product Code	Fan Dia.	A	B	Weight kg
078C-0450-C	450	470	29	1.8
078C-0500-C	500	520	32	2.2
078C-0560-C	560	585	32	2.5
078C-0630-C	630	655	40	2.6

Flexible Connectors

Fits directly to matching flanges providing a flexible connection between the fan and duct or ancilliaries. Silicone coated glass fibre, supplied with plated steel band fixings.

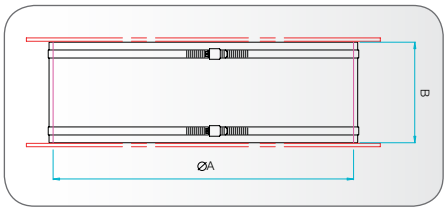

Product Code	Fan Dia. A	B	Weight kg
063-0450-PU250	450	150	1.1
063-0500-PU250	500	150	1.2
063-0560-PU250	560	150	1.3
063-0630-PU250	630	200	1.4

Matching Flange

Fits directly to the fan case flange and provides easy connection to flexible connector or ducting. Hot dipped galvanised steel.

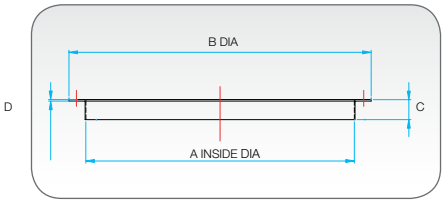

Product Code	Fan Dia. A	B	C	D	Weight kg
061B-0450	450	530	40	1.5	2.2
061B-0500	500	585	45	2.0	2.6
061B-0560	560	645	45	2.0	3.0
061B-0630	630	715	45	2.0	3.4

Bell Mouth Inlets

Fits directly onto the fan case flange to improve inlet airflow for end of duct applications. Hot dipped galvanised steel.

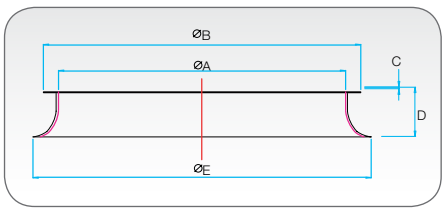

Product Code	Fan Dia. A	B	C	D	E	Weight kg
241B-0450-BELL	450	535	3	85	570	5.3
241B-0500-BELL	500	585	3	93	630	6.2
241B-0560-BELL	560	645	3	105	700	7.5
241B-0630-BELL	630	715	3	105	780	9.0

Non Return Dampers

Fixed direct to fan case flange to prevent reverse flow of air when the fan is not operating. Standard damper (STD) suitable

for horizontal or vertical (upward airflow) installation, Counter balanced (CB) option is available for vertical (downward airflow) installation. Hot dipped galvanised steel casing and galvanised steel butterfly type blades.

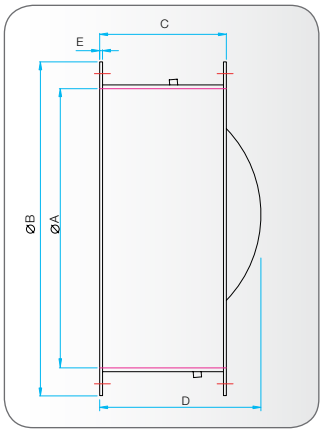

Product Code	Fan Dia. A	B	C	D	E	Weight kg
019-0450-STD	450	530	220	280	3.0	15
019-0500-STD	500	585	220	315	3.0	17
019-0560-STD	560	645	220	375	3.0	20
019-0630-STD	630	715	250	420	3.0	25

Note: Per DW/172 Non Return Dampers should not be used for kitchen extract systems.

Mounting Feet

For free standing mounting of ducted fans, fit directly into fan case flange. Hot dipped galvanised steel.

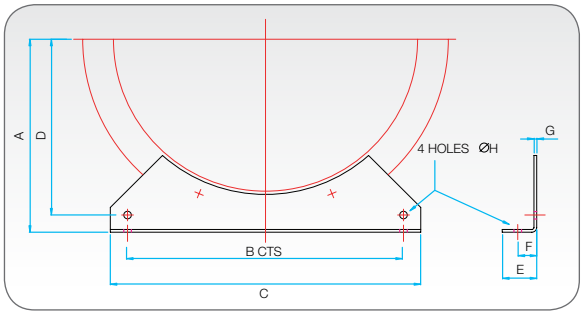

Product Code	Fan Dia.	A	B	C	D	E	F	G	H	Weight kg
060B-0450	450	280	400	450	255	50	27.5	4	11	2.0
060B-0500	500	315	450	500	290	50	27.5	4	11	2.5
060B-0560	560	355	510	560	330	60	32	5	11	4.0
060B-0630	630	400	580	630	375	60	32	5	11	5.0

AV Mounts

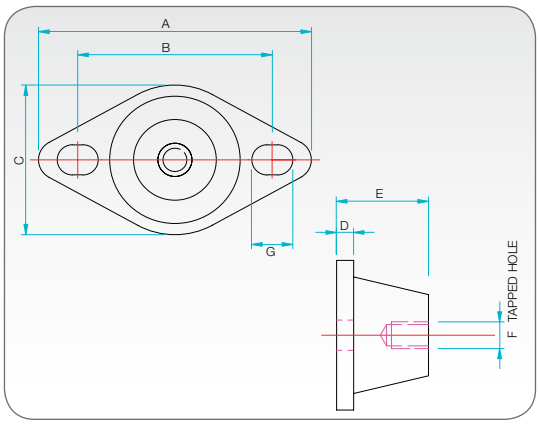

Product Code	A	B	C	D	E	F	G	Weight kg	Load Weight kg (Min)	Load Weight kg (Max)
05.103	64	50	43	5.5	20	M6	Ø7	0.04	1	9
19.100	80	57	45	5	32	M8	12 x 9	0.11	28	80
19.101	95	71	60	5	45	M10	14 x 9	0.25	110	280
19.102	150	115	86	6	70	M12	22 x 11	0.73	150	400

• All dimensions are in mm

Elta Fans Limited has a policy of continuous product development and improvement and therefore reserves the right to supply products which may differ from those illustrated and described in this publication. Confirmation of dimensions and data will be supplied on request.

CIBSE PATRONS

A member of HEVAC ASSOCIATION

BS EN ISO 9001:2008

BSRIA Member

AIR MOVEMENT AND CONTROL ASSOCIATION INTERNATIONAL amca MEMBER

Elta Fans Ltd - Building Services

46 Third Avenue,
Pensnett Trading Estate,
Kingswinford, West Midlands,
DY6 7US, UK

T: +44 (0) 1384 275800
F: +44 (0) 1384 275810
E: bs@eltafans.co.uk
W: eltafans.com

Elta Fans Ltd - Export

17 Barnes Wallis Road,
Segensworth East Industrial Estate,
Fareham, Hampshire,
PO15 5ST, UK

T: +44 (0) 1489 566500
F: +44 (0) 1489 566555
E: export@eltafans.co.uk
W: eltafans.com

FSC Mixed Sources
Product group from well-managed forests and other controlled sources
www.fsc.org Cert no.
© 1996 Forest Stewardship Council

A member of the ELTA GROUP LIMITED

ARUN DISTRICT COUNCIL R/35/17/DOC

EF/SPP V1 - 10-12-21