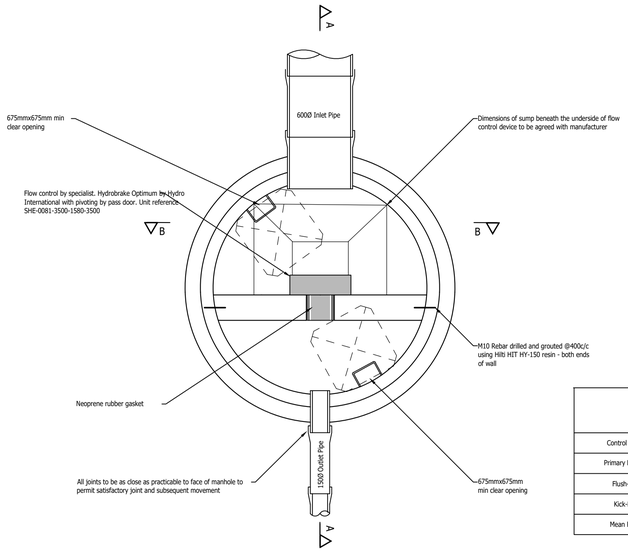

Plan

Technical Specification of Flow Control (unit ref: SHE-0087-4100-1580-4100)		
Control Point	Head (m)	Flow (l/s)
Primary Design	1.580	4.10
Flush-Flo	0.383	3.70
Kick-Flo	0.780	3.00
Mean Flow		3.40

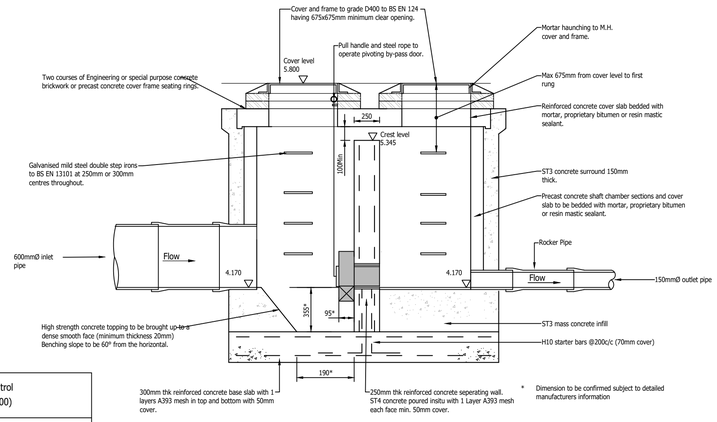

Section A-A

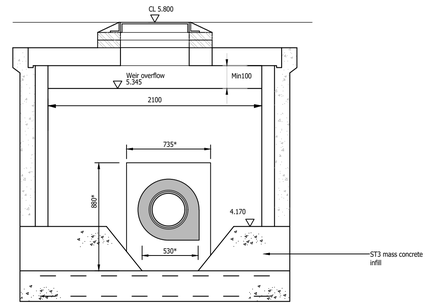

Section B-B

* Dimension to be confirmed subject to detailed manufacturers information

Flow Control Chamber SWMH17.9

GENERAL NOTES

1. The location, size, depth and identification of existing services that may be shown or referred to on this drawing have been assessed from non intrusive observations , record drawings or the like. The contractor shall safely carry out intrusive investigations, trial holes or soundings prior to commencing work to satisfy himself that it is safe to proceed and that the assessments are accurate. any discrepancies shall be notified to gta prior to works commencing.

2. Tender or billing drawings shall not be used for construction or the ordering of materials.

3. Do not scale. All dimensions and levels to be site confirmed.

4. This drawing shall be read in conjunction with all relevant architects, consultants drawings and specifications, together with H&S plan requirements.

5. Copyright : This drawing must not be copied, amended nor reproduced without the prior written agreement of gta.

6. All drawings specifications and recommendations made by gta are subject to Local Authority and other relevant Statutory Authorities approval. Any works or services made abortive due to the client proceeding prior to these approvals is considered wholly at the Clients risk. gta hold no responsibility for resulting abortive works or costs.

NOTE:
For location of flow control chambers refer to drainage layout. Drawing to be read in conjunction with flow control manufacturer's details. Representation of flow control device is schematic only.

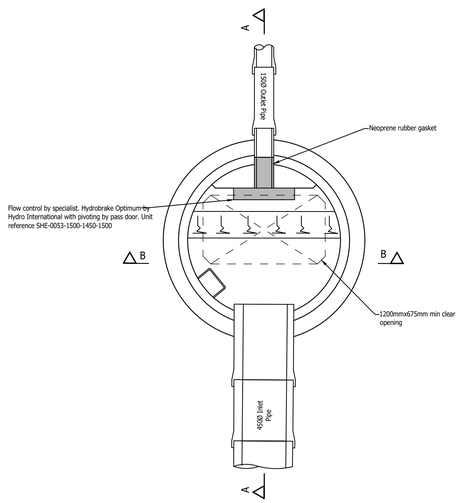

Plan

Technical Specification of Flow Control (unit ref: SHE-0053-1500-1450-1500)		
Control Point	Head (m)	Flow (l/s)
Primary Design	1.450	1.50
Flush-Flo	0.233	1.10
Kick-Flo	0.472	0.90
Mean Flow		1.10

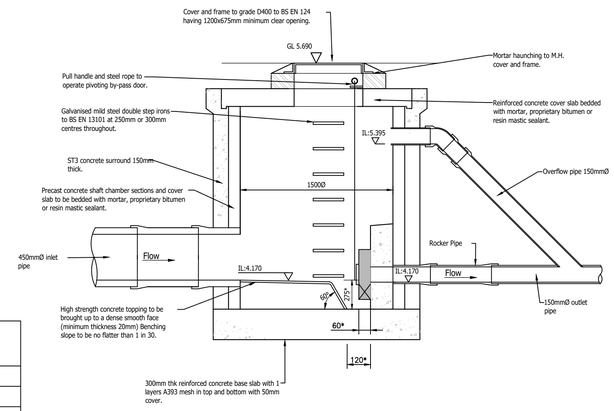

Section A-A

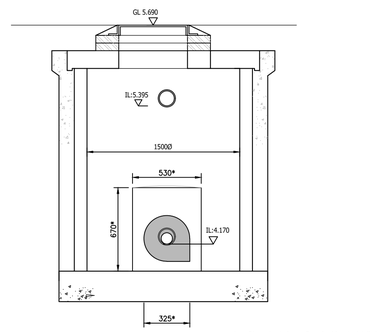

* Dimension to be confirmed subject to detailed manufacturers information

Section B-B

Flow Control Chamber SWMH21.7

Rev	Amendments	Date	Dsn	Chk
P5	SWMH17.9 TECHNICAL SPECIFICATION OF FLOW CONTROL UNIT AMENDED. BOTH FLOW CONTROL CHAMBERS WEIR CREST LEVEL ADJUSTED TO SUIT UPDATED WINDES CALCULATIONS.	19.10.22	DT	MR
P4	DRAWING TITLE CHANGED	02.08.22	DT	MR
P3	AMENDED TO SUIT ICOSA WATER COMMENTS	10.05.22	DT	MR
P2	LEVELS ADDED, FLOW CONTROL TECHNICAL SPECIFICATION UPDATED	14.04.22	DT	MR
P1	INITIAL ISSUE	25.02.22	DT	MR

Status: PRELIMINARY

Client: Taylor Wimpey

Architect:

Project: SEFTER ROAD BOGNOR REGIS

Title: MAIN DRAINAGE CONSTRUCTION DETAILS SHEET 5 OF 7

Date: FEBRUARY 2022

Scale @ A1: NTS

Clients Ref.:

Project Ref.: 10768

gta Civils & Transport
Gloucester House, 66a Church Walk,
Burgess Hill, West Sussex, RH15 9AS
Tel.01444 871444 Web: www.gtacivils.co.uk

Drawing Number: 10768/1505

Rev.: P5

ARUN DISTRICT COUNCIL PRINT2DOC