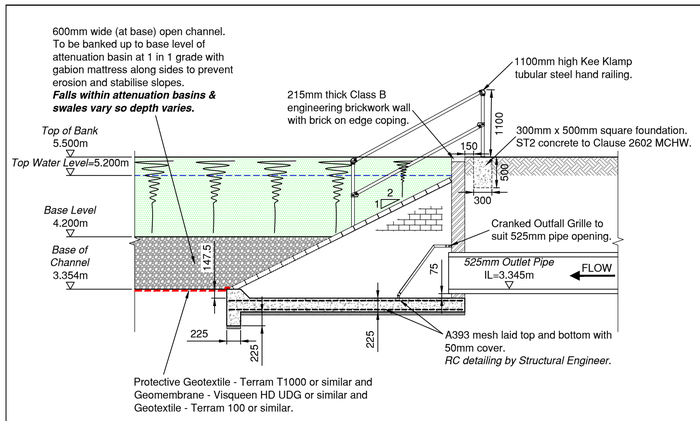

Headwall Cross Section

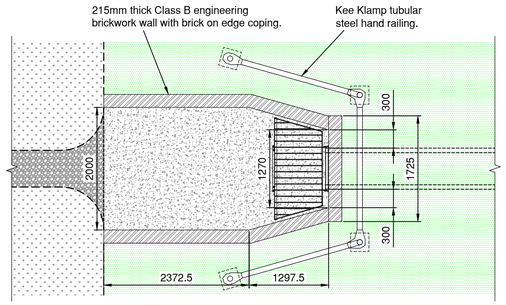

Headwall Plan

Headwall SW-13

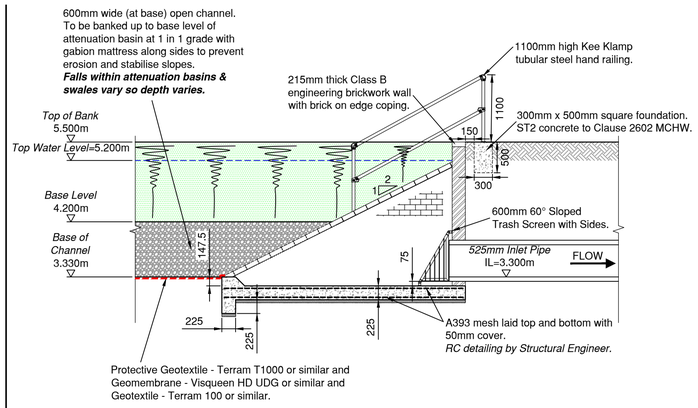

Headwall Cross Section

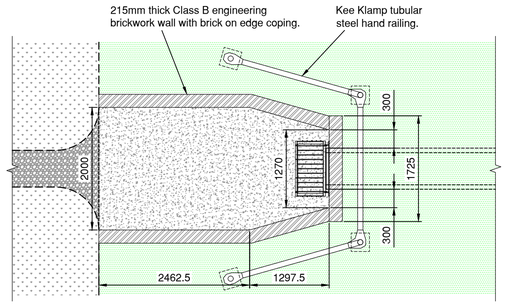

Headwall Plan

Headwall SW-11

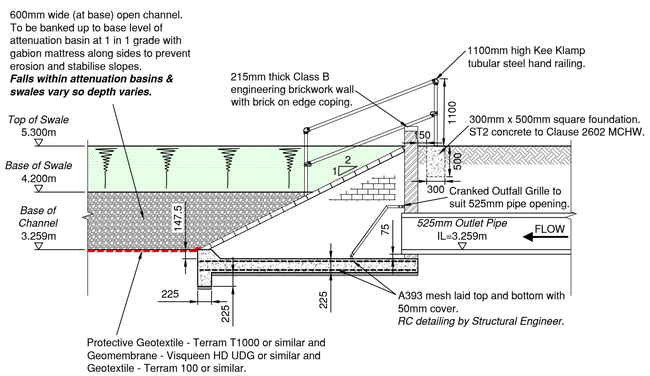

Headwall Cross Section

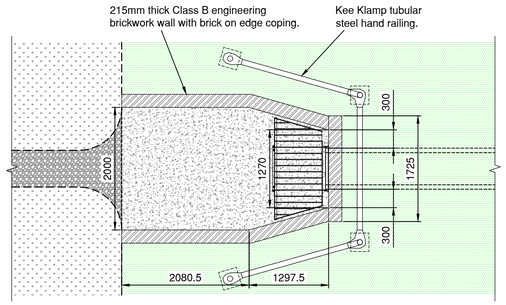

Headwall Plan

Headwall SW-9

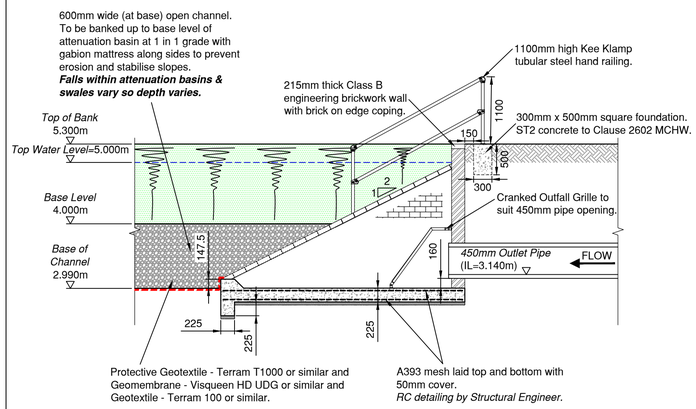

Headwall Cross Section

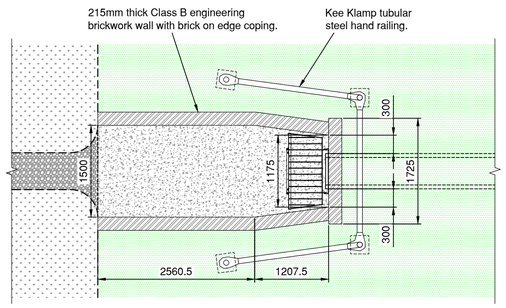

Headwall Plan

Headwall SW-32

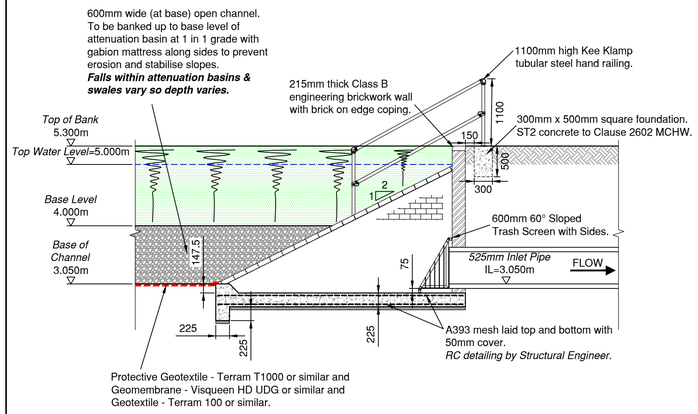

Headwall Cross Section

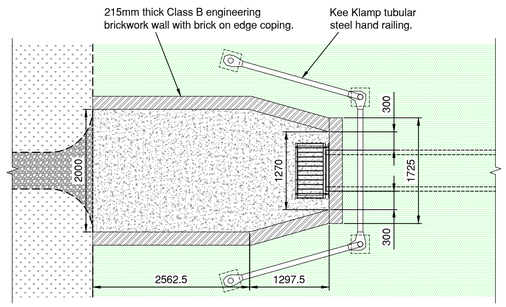

Headwall Plan

Headwall SW-30

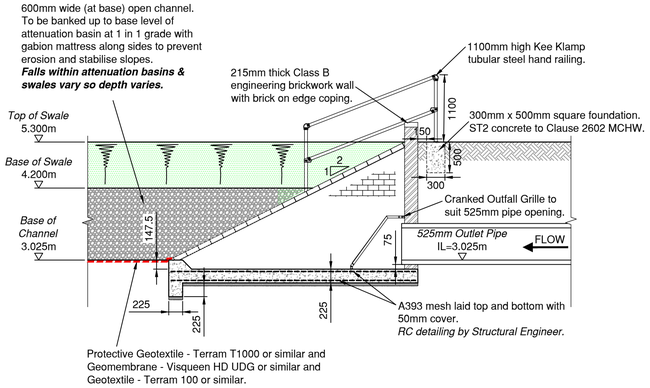

Headwall Cross Section

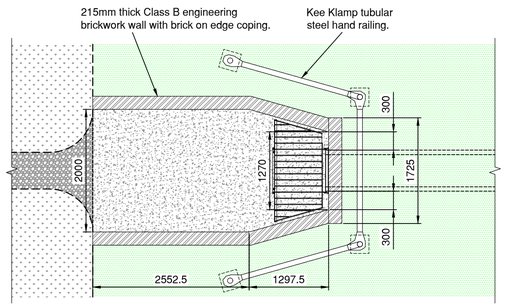

Headwall Plan

Headwall SW-29

NOTES

1. This drawing should be read in conjunction with other SuDS Features Headwall Construction Details, SuDS Features General Arrangement Layouts (DSM/E4761/431 & 432), SuDS Features Control Chamber Construction Details (DSM/E4761/435) and SuDS Features Setting Out Layouts (DSM/E4761/436 & 437).
2. All dimensions are in millimetres unless stated otherwise.
3. Do not scale from this drawing. Only written dimensions are to be used.
4. Whilst all Surface Water Sewers are to remain private, all construction to be in accordance with Sewers for Adoption - 6th Edition & Interim Addendum and the specific requirements of Southern Water.
5. Refer to geotechnical report for sulphate resisting class and ACEC class.
6. ***Outgoing pipes greater than 600mm diameter should be fitted with guard bars, safety chains [to BS4942:pt 2 and BS 729] or other safety devices in accordance with the Southern Water safety policy.***
7. For Manufacturer and specification of pipes and fittings refer to drainage layout and schedule.
8. For details of size and invert of pipe and top of headwall level etc. refer to engineering layouts.
9. Insitu concrete generally to be GEN 4 Designated Mix.
10. Insitu reinforced concrete to be RC 35 Designated Mix only when specified.
11. All insitu concrete to be thoroughly compacted.
12. Width of headwall depends on the size and number of pipes and ditch profile.
13. Headwall to be constructed in approved Class B engineering bricks to BS 3921 jointed with cement mortar to Clause 2404 table 24/1 designation and laid in English bond.
14. Exposed ends of brick-on-edge coping shall be restrained with galvanised straps (2 no.) End brick shall not be perforated.
15. Pipe to be at right angles to the headwall. Where pipe is angled towards the down stream the headwall elements shall be reorientated square to the pipe.
16. Where settlement is probable each pipe entering the headwall shall incorporate several short lengths connected by flexible joints.
17. ***Grilles to be fitted on outfalls of 300mm diameter or greater.***
18. ***Safety grille to be as Figure 2.2 of Sewers for Adoption 6th Edition & Interim Addendum or similar.***
19. Completed bagwork to be wetted to ensure bonding.
20. Where the headwall is at the head of a ditch the invert bagwork shall extend 4 bag widths.
21. Alternate courses of bagwork shall be pinned with 12mm dia high yield steel 'U' bars 450mm long.
22. ***ANY VARIANCE OR DISCREPANCY MUST BE REPORTED BACK TO RCP ENGINEERING BEFORE WORK BEGINS.***

CDM NOTES

1. EXISTING SERVICES. Depth of existing services must be determined prior to works commencing. The contractor is responsible for establishing underground services in accordance with HSE Guidance note HS (G) 47. Any services which would be within the proposed construction layers must be lowered to below the sub-base.

Rev.	Date	Details	By	Chkd	Appd
B	03.07.20	SW-32 amended to reflect revised incoming pipe, invert and base channel levels revised. Headwall SW-9 grille indicated in accordance with drainage comments received from Arun District Council on 23/06/2020. (Revision clouds omitted for clarity).	LD	TK	TRS
A	05.06.20	Headwalls amended in accordance with drainage comments received from Arun District Council on 12/05/2020. (Revision clouds omitted for clarity).	NW	AC	TRS

Client:- DREW SMITH LIMITED

Site:- SUMMER LANE PAGHAM

Drawing Title:- SuDS FEATURES
HEADWALL
CONSTRUCTION DETAILS
SHEET 1 OF 2

Date: March 2020 | Scales: Not to Scale at A1
Drawn: AC | Checked: LD | Approved: TRS

Drawing No. DSM/E4761/433 B

INITIAL TENDER ISSUE
SUBJECT TO PLANNING APPROVAL

RCP ARCHITECTURE & CIVIL ENGINEERING
Rogers Cory Partnership
Architectural and Civil Consultants
The Old School Old School Road
Hook Hampshire RG27 9NJ
T: 01256 769269 E: mail@rcpconsultants.co.uk W: rcpconsultants.co.uk