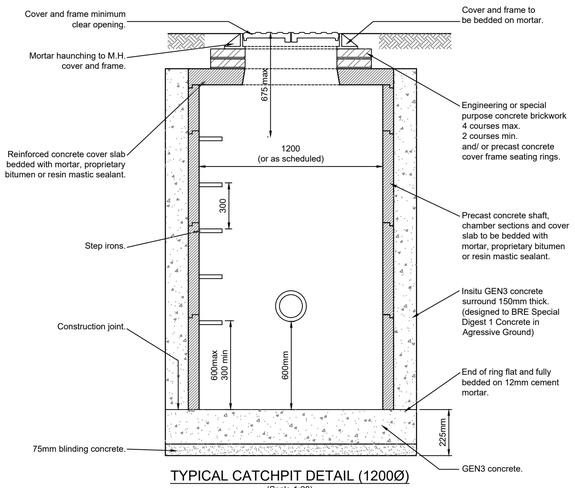

TYPICAL CATCHPIT DETAIL (1200Ø)
(Scale 1:20)

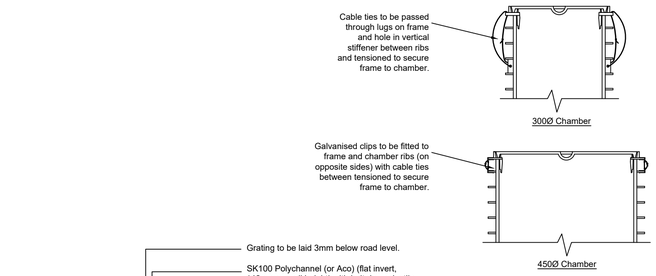

ACCESS CHAMBER FRAME FIXING (LANDSCAPED AREAS)

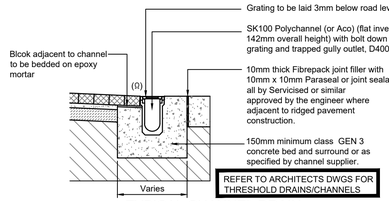

TYPICAL CHANNEL DRAIN
(Scale 1:20)

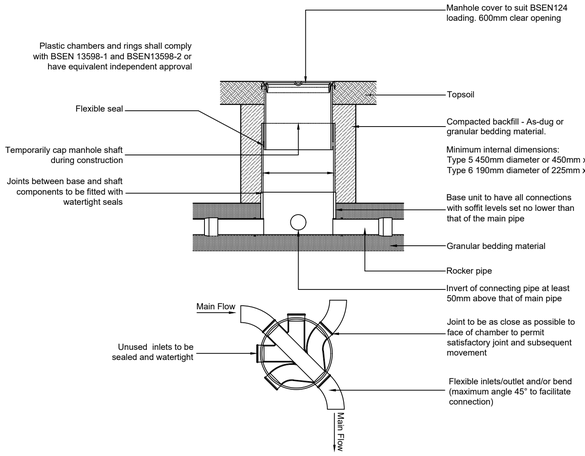

Alternative base invert layouts. All connections to be minimum soffit to soffit.

TYPICAL ACCESS CHAMBER DETAIL- TYPES 5 & 6 (LANDSCAPED AREAS)
1m MAXIMUM DEPTH TO FROM COVER TO PIPE SOFFIT. (NON ENTRY) LOCATED IN LANDSCAPED AREAS

DRAINAGE NOTES:

1. All drainage works to be constructed in strict accordance with specification of the Local Authority, Building Regulations, Design and Construction Guidence (published by Water UK), BS8301 & BSEN.752-1.
2. For location and setting out of building drainage points refer to architects drawings.
3. All pipe runs near buildings to comply with the Building Regulations 2002 part H1. Where a pipe is within 1m of a foundation the trench shall be filled with class gen3 concrete up to the lowest level of the foundation. Where the trench is further than 1m from the foundation, the trench shall be filled with class gen3 concrete to a level below the lowest level for the foundation equal to the distance from the foundation less 150mm. In both cases the pipe shall be bedded and surrounded in 150mm thick class GEN3 concrete.
4. Where pipes, external to the structures, have a depth to soffit from ground level of less than 450mm they shall have a class GEN3 concrete encasement (150mm thick).
5. Where a pipe, under a carriageway, has a depth of cover of less than 1.2m the pipe shall be laid in a concrete bed and surround.
6. In any circumstances where pipes are bedded and surrounded in concrete flexible joints should be provided. compressible boards (fibreboard or polystyrene) shall be provided at a maximum of 8m centres (coinciding with pipe joints). the boards shall be pre-cut to pipe diameter and to a height and width equal to the concrete cross section. a board thickness of 18mm for pipes up to 450mm nominal diameter and 36mm for pipes over 450mm nominal diameter.
7. All private building drainage shall be constructed in strict accordance with BS EN.752-1. Foul drainage beneath the floor slab shall be laid, shall be laid no flatter than 1:40. Unless otherwise specified below ground building drainage external to the building shall be 100mm diameter and shall be laid at a minimum gradient of (<1l/s = 1 in 40/>1l/s = 1 in 80) for foul drains and 1 in 80 for surface water drains.
8. All building drains shall be laid in conjunction with 'non adoptive bedding details' (class d, n or b) unless otherwise specified.
9. All pipes, bends and junction for private building drainage shall be UPVC conforming to BS4660, BSEN13598 and BSEN1401 as appropriate and shall be laid in accordance with the manufacturer's specification.
10. All pipes, bends and junction materials for adoptable drainage shall be vitrified clay, extra strength or super strength to BSEN295, with flexible joints and kitemark certified
11. All back inlet gullies to be roddable or connected to inspection chambers.
12. All gully connections other than at manholes to be 'y' junctions.
13. All road gully connections to be 150mm diameter.
14. All stub stacks to be fitted with air admittance valves where branch drain exceeds 12m except at the head of the run. Soil vent pipes located at the head of a run to terminate to fresh air.
15. No low point shall be without a method of drainage.
16. All connections to be soffit to soffit unless otherwise noted.
17. All concrete and concrete products to be in accordance with BRE 363 for sulphates.
18. The locations of all building drainage points shall be cross referenced against the architects drawings during setting out.
19. Before connections are made to existing public sewers an application under 106 must be made to relevant sewerage undertaker.
20. The precise depth and location and size of existing pipes, watecourses or manholes where connections or diversion are proposed must be confirmed and reported to the engineer before works commence on site.
21. Existing drains - any existing drains to be abandoned to be decommissioned in view of building regulations by either building out, infilled or sealed.
22. Should ground water be encountered on site during construction BPC shall be informed to determine if additional measures are required with regard to floatation.
23. The drainage drainage system shall be fully cleansed on completion of the project using methods that ensure pollution off site does not occur.
24. Any existing land drains severed during construction shall be reinstated.

NOTES

A1

1. This drawing is to be read in conjunction with all other Bright Plan Civils drawings, and with all relevant Architect's and Engineer's drawings and specification. Any discrepancies found are to be reported immediately to the Engineer.
2. Bright Plan Civils accepts no responsibility for inaccuracies in data provided by third parties such as topographic surveys or Ordnance Survey mapping.
3. Do not scale, work to figured dimensions only. All dimensions are in millimeters unless noted otherwise and all levels are in metres from the topographic survey datum.
4. Any information given regarding existing underground services is given in good faith after consultation with the relevant authority, however accuracy is not certain. The main contractor is responsible for checking all information on site prior to work commencing and taking due care whilst undertaking the works.
5. All dimensions to be checked on site. All details and dimensions relating to sub-contractors work must be checked and agreed between the sub-contractor or supplier and the general contractor.
6. The electronic information from this drawing can not be guaranteed as dimensionally drawn exact. Figured dimensions must be used for setting out and detailing. Bright Plan Civils logos and company information must be removed from copies if information is re-used.
7. The main contractor is responsible for the design of all temporary works, and is also responsible for the safe maintenance and stability of existing buildings at all times.
8. The groundworks contractor is responsible for dealing with all occurrences of ground water during the construction period.
9. The contractor must comply with all current legislation relating to health & safety.
10. All products specified shall be installed in strict accordance with the manufacturers recommendations and instructions. If there are discrepancies between that information and the details on any Bright Plan Civils drawings, the manufacturers instructions must be used.
11. All earthworks shall be in accordance with Specification for Highway Works with 6F1 or 6F2 material used to increase levels where required

RESIDUAL HAZARDS

In addition to the hazards/risks normally associated with the type of work detailed on this drawing, note the following:

1. Buried services. Contractor to refer to record drawings and use CAT to locate existing services and undertake necessary precautions and investigation prior to excavating.
2. Working in live traffic. Contractor to ensure traffic management is designed, erected and maintained to protect the workforce and the public. Contractor to undertake necessary precautions and ensure suitable traffic management is in place prior to commencement.
3. Working in live sewers. Contractor to ensure operatives are familiar and competent with the dangers of working in live sewers.
4. Excavations close to existing structures. Contractor to prepare method statement to ensure stability of existing structure.

It is assumed that all works will be carried out by a competent contractor working, where appropriate, to an approved risk assessment and method statement.

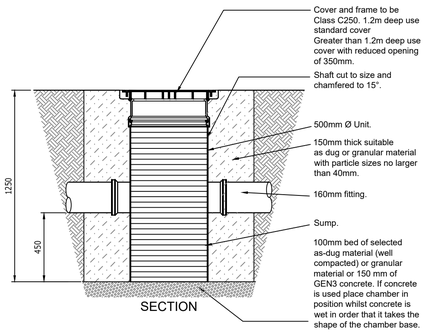

POLYPROPYLENE SHALLOW SILT TRAP DETAIL (500Ø)
(Scale 1:20)

Depth to invert 1.25m (standard unit)
Silt Traps installed greater than single unit depth to be extended using inspection chamber shaft units.

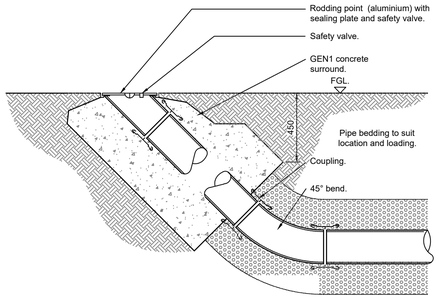

DETAIL OF RODDING EYE
(Scale 1:20)

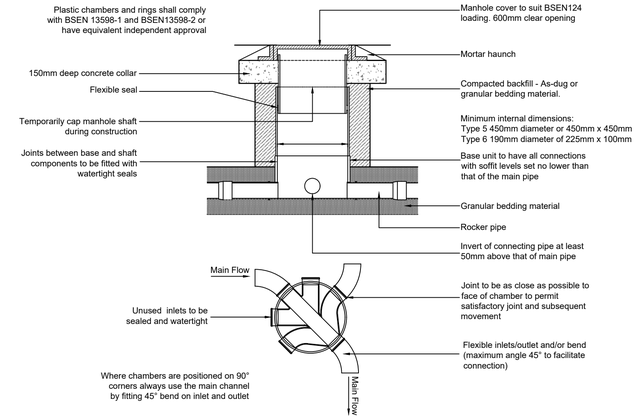

Alternative base invert layouts. All connections to be minimum soffit to soffit.

TYPICAL ACCESS CHAMBER DETAIL - TYPE 5 & 6 (FOOTPATHS AND PRIVATE DRIVES)
1m MAXIMUM DEPTH TO FROM COVER TO PIPE SOFFIT. (NON ENTRY) LOCATED IN AREAS SUBJECT TO LIGHT VEHICLES AND FOOTPATHS

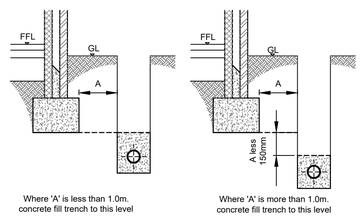

Where 'A' is less than 1.0m. concrete fill trench to this level

Where 'A' is more than 1.0m. concrete fill trench to this level

DETAIL OF PIPE RUNS NEAR BUILDINGS
(Scale 1:10)

Table 11 **Minimum dimensions for access fittings and inspection chambers**

Type		Depth to invert from cover level (m)	Internal sizes: Length x width (mm x mm)	Internal sizes: Circular (mm)	Cover sizes: Length x width (mm x mm)	Cover sizes: Circular (mm)
Rodding eye		As drain but min. 100				Same size as pipework [1]
Access fitting						
small	150 diam.	0.6 or less, except where situated in a chamber	150 x 100	150	150 x 100 [1]	Same size as access fitting
large	225 x 100		225 x 100	225	225 x 100 [1]	
Inspection chamber						
shallow		0.6 or less	225 x 100	190 [2]	–	190 [1]
		1.2 or less	450 x 450	450	Min. 430 x 430	430
deep		> 1.2	450 x 450	450	Max. 300 x 300 [3]	Access restricted to max. 350 [3]

Notes:
1. The clear opening may be reduced by 20mm in order to provide proper support for the cover and frame.
2. Drains up to 150mm.
3. A larger clear opening cover may be used in conjunction with a restricted access. The size is restricted for health and safety reasons to deter entry.

BUILDING REGULATIONS MINIMUM DIMENSIONS FOR ACCESS FITTINGS AND INSPECTION CHAMBERS

Table 12 **Minimum dimensions for manholes**

Type	Size of largest pipe (DN)	Min. internal dimensions [1]: Rectangular length and width	Min. internal dimensions [1]: Circular diameter	Min. clear opening size [1]: Rectangular length and width	Min. clear opening size [1]: Circular diameter
Manhole					
< 1.5m deep to soffit	≤ 150	750 x 675 [7]	1000 [7]	750 x 675 [2]	na [3]
	225	1200 x 675	1200	1200 x 675 [2]	
	300	1200 x 750	1200		
	>300	1800 x (DN+450)	The larger of 1800 or (DN+450)		
>1.5m deep to soffit	≤ 225	1200 x 1000	1200	600 x 600	600
	300	1200 x 1075	1200		
	375-450	1350 x 1225	1200		
	>450	1800 x (DN+775)	The larger of 1800 or (DN+775)		
Manhole shaft [4]					
> 3.0m deep to soffit of pipe	Steps [5]	1050 x 800	1050	600 x 600	600
	Ladder [6]	1200 x 800	1200		
	Winch [6]	900 x 800	900	600 x 600	600

Notes:
1. Larger sizes may be required for manholes on bends or where there are junctions.
2. May be reduced to 600 by 600 where required by highway loading considerations, subject to a safe system of work being specified.
3. Not applicable due to working space needed.
4. Minimum height of chamber in shafted manhole 2m from benching to underside of reducing slab.
5. Min. clear space between ladder or steps and the opposite face of the shaft should be approximately 900mm.
6. Winch only – no steps or ladders, permanent or removable.
7. The minimum size of any manhole serving a sewer (i.e. any drain serving more than one property) should be 1200mm x 675mm rectangular or 1200mm diameter.

BUILDING REGULATIONS MINIMUM DIMENSIONS FOR MANHOLES

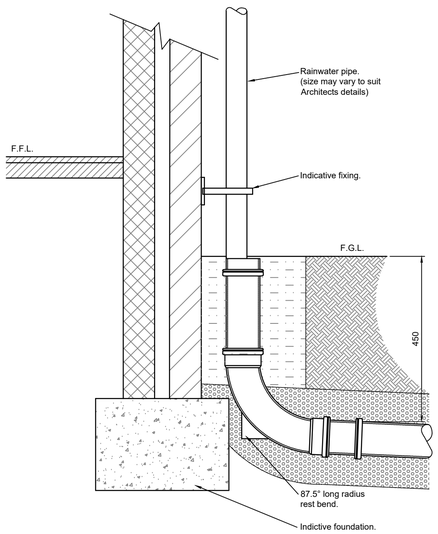

DETAIL OF RAINWATER PIPE
(Scale 1:20)

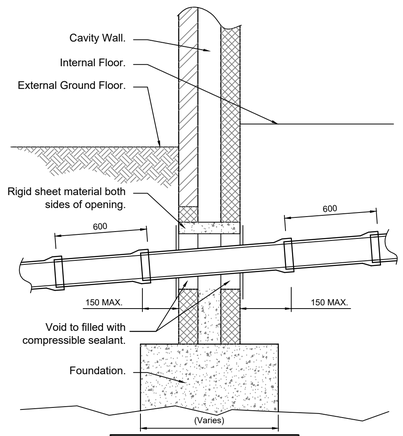

Note:
Arched or lintelled opening to give 50mm min clearance all around the pipe. mask opening both sides with rigid sheet material to prevent overspill of fill or entry for vermin.

TYPICAL SECTION PIPE PASSING THROUGH WALL PIPE THROUGH LINTELLED OPENING
(Scale 1:20)

Rev.	Date	Amendments
-	-	Original Issue

BP CIVILS
Infrastructure Design and Transport Planning Consultants
2 West Barn, Norton Lane, Chichester, West Sussex PO20 3AF
Tel: 0333 358 3260
www.bpcivils.co.uk enquiries@bpcivils.co.uk

Drawing Status: FOR APPROVAL
NOT FOR CONSTRUCTION

Client: Foreman Homes

Project: Summer Lane, Pagham, West Sussex

Drawing Title: Private Drainage Details Sheet 2

Scale at A1	Date	Drawn By	Checked By	Project No.
AS SHOWN	Jul 24	JHL	MJA	D2240

Drawing No. 000-BPC-WD-ZZ-D-C-6021 | Rev. -