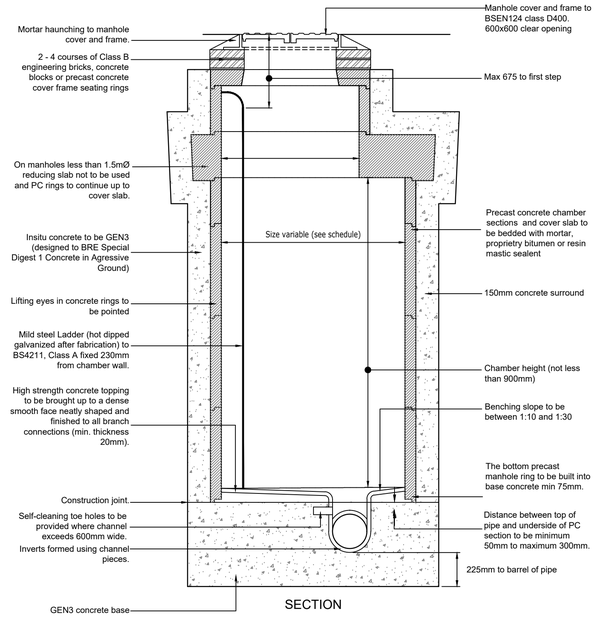

SECTION

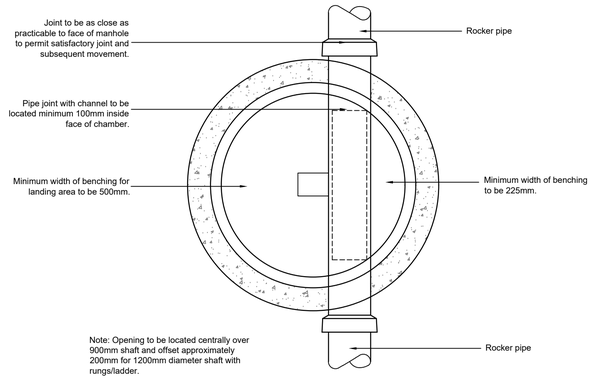

Note: Opening to be located centrally over 900mm shaft and offset approximately 200mm for 1200mm diameter shaft with rungs/ladder.

TYPICAL MANHOLE DETAIL - TYPE 1

Depth from cover level to soffit of pipe 3.0m to 6.0m.
(Scale 1:20)

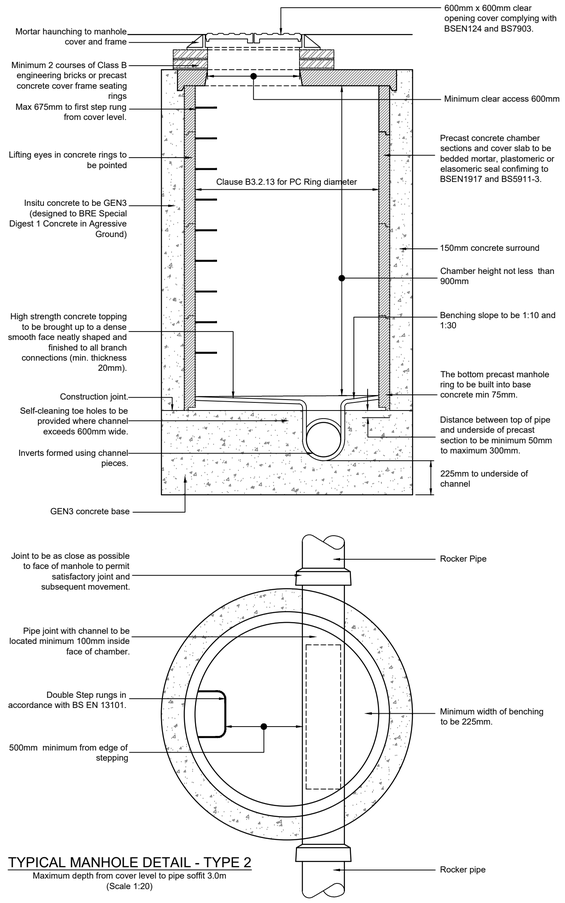

TYPICAL MANHOLE DETAIL - TYPE 2

Maximum depth from cover level to pipe soffit 3.0m
(Scale 1:20)

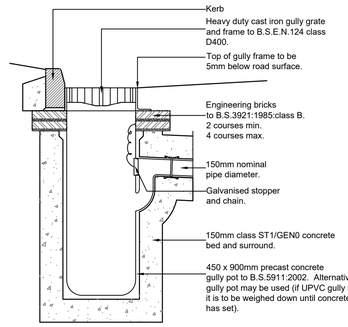

TYPICAL ROAD GULLY

(Scale 1:20)

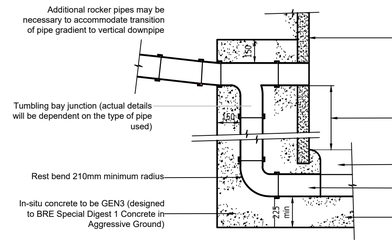

VERTICAL BACKDROP DETAIL

(Scale 1:20)

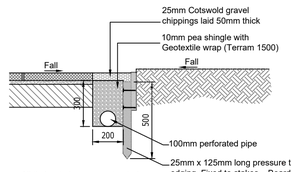

All timber to be presure treated to achaive Min 15 year lifespan

25mm x 125mm long pressure treated timber edging. Fixed to stakes . Boards fixed to 38mm x 38mm x 500mm long pointed pressure treated timber stakes by 2 no. galvanised pain head nails (2 stakes provide where boards abut). Boards to be set 3mm below shingle and 25mm below turf

CLIENT TO ADVISE

PATIO/GARDEN DRAIN

(1:20)

ALTERNATIVELY CPM PREFORMED MANHOLES CAN BE USED

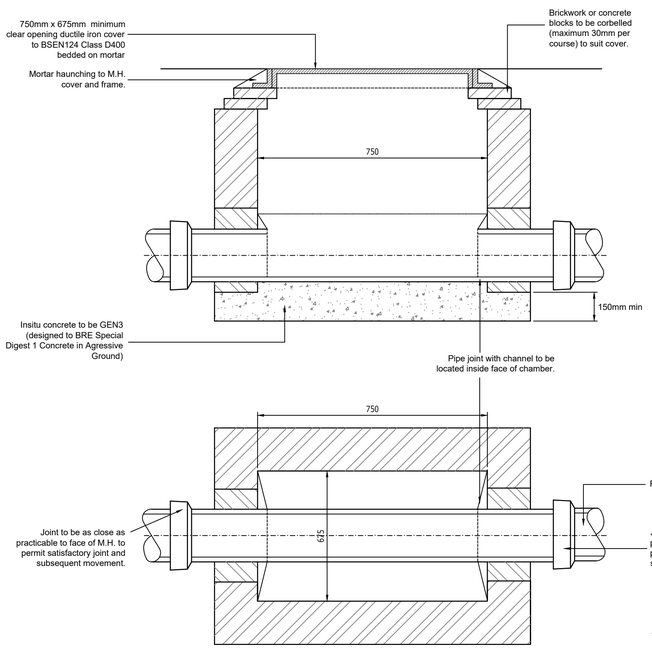

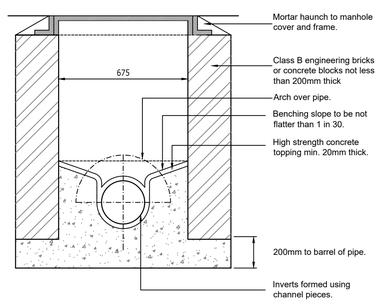

Internal dimensions of manhole to be Min 750mm x 675mm but manhole width should be increased for pipes larger than 225mm diameter to give 225mm benching each side and the brickwork/masonry units corbelled down to suit cover.

The use of precast concrete rectangular manhole units with 150mm grade GEN3 concrete surround (designed to BRE Special Digest 1 Concrete in Aggressive Ground) is permitted.

TYPICAL MANHOLE DETAIL -BRICK

Depth from cover level to pipe soffit 1.0m -1.5m
(Scale 1:20)

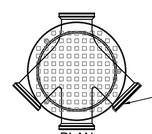

PLAN

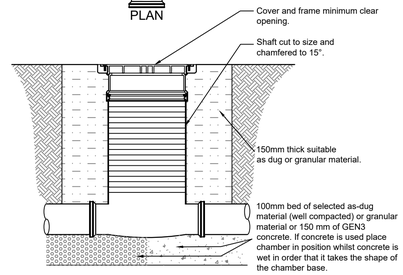

SECTION

POLYPROPYLENE SHALLOW INSPECTION CHAMBER DETAIL (250Ø)

(Scale 1:20)

Depth to invert of less than 600mm.

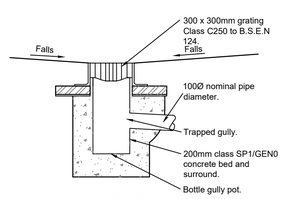

TYPICAL YARD (BOTTLE) GULLY

(VEHICULAR LOADING)
(Scale 1:20)

DRAINAGE NOTES:

1. All drainage works to be constructed in strict accordance with specification of the Local Authority, Building Regulations, Design and Construction Guidence (published by Water UK), BS8301 & BSEN.752-1.
2. For location and setting out of building drainage points refer to architects drawings.
3. All pipe runs near buildings to comply with the Building Regulations 2002 part H1. Where a pipe is within 1m of a foundation the trench shall be filled with class gen3 concrete up to the lowest level of the foundation. Where the trench is further than 1m from the foundation, the trench shall be filled with class gen3 concrete to a level below the lowest level for the foundation equal to the distance from the foundation less 150mm. In both cases the pipe shall be bedded and surrounded in 150mm thick class GEN3 concrete.
4. Where pipes, external to the structures, have a depth to soffit from ground level of less than 450mm they shall have a class GEN3 concrete encasement (150mm thick).
5. Where a pipe, under a carriageway, has a depth of cover of less than 1.2m the pipe shall be laid in a concrete bed and surround.
6. In any circumstances where pipes are bedded and surrounded in concrete flexible joints should be provided. compressible boards (fibreboard or polystyrene) shall be provided at a maximum of 8m centres (coinciding with pipe joints). the boards shall be pre-cut to pipe diameter and to a height and width equal to the concrete cross section. a board thickness of 18mm for pipes up to 450mm nominal diameter and 36mm for pipes over 450mm nominal diameter.
7. All private building drainage shall be constructed in strict accordance with BS EN.752-1. Foul drainage beneath the floor slab shall be laid, shall be laid no flatter than 1:40. Unless otherwise specified below ground building drainage external to the building shall be 100mm diameter and shall be laid at a minimum gradient of (<1⅛ = 1 in 40/>1⅛ = 1 in 80) for foul drains and 1 in 80 for surface water drains.
8. All building drains shall be laid in conjunction with 'non adoptive bedding details' (class d, n or b) unless otherwise specified.
9. All pipes, bends and junction for private building drainage shall be UPVC conforming to BS4660, BSEN13598 and BSEN1401 as appropriate and shall be laid in accordance with the manufacturer's specification.
10. All pipes, bends and junction materials for adoptable drainage shall be vitrified clay, extra strength or super strength to BSEN295, with flexible joints and kitemark certified
11. All back inlet gullies to be roddable or connected to inspection chambers.
12. All gully connections other than at manholes to be 'y' junctions.
13. All road gully connections to be 150mm diameter.
14. All stub stacks to be fitted with air admittance valves where branch drain exceeds 12m except at the head of the run. Soil vent pipes located at the head of a run to terminate to fresh air.
15. No low point shall be without a method of drainage.
16. All connections to be soffit to soffit unless otherwise noted.
17. All concrete and concrete products to be in accordance with BRE 363 for sulphates.
18. The locations of all building drainage points shall be cross referenced against the architects drawings during setting out.
19. Before connections are made to existing public sewers an application under 106 must be made to relevant sewerage undertaker.
20. The precise depth and location and size of existing pipes, watecourses or manholes where connections or diversion are proposed must be confirmed and reported to the engineer before works commence on site.
21. Existing drains - any existing drains to be abandoned to be decommissioned in view of building regulations by either building out, infilled or sealed.
22. Should ground water be encountered on site during construction BPC shall be informed to determine if additional measures are required.
23. The drainage drainage system shall be fully cleansed on completion of the project using methods that ensure pollution off site does not occur.

22. Any existing land drains severed during construction shall be reinstated.

A1

NOTES

1. This drawing is to be read in conjunction with all other Bright Plan Civils drawings, and with all relevant Architect's and Engineer's drawings and specification. Any discrepancies found are to be reported immediately to the Engineer.
2. Bright Plan Civils accepts no responsibility for inaccuracies in data provided by third parties such as topographic surveys or Ordnance Survey mapping.
3. Do not scale, work to figured dimensions only. All dimensions are in millimeters unless noted otherwise and all levels are in metres from the topographic survey datum.
4. Any information given regarding existing underground services is given in good faith after consultation with the relevant authority, however accuracy is not certain. The main contractor is responsible for checking all information on site prior to work commencing and taking due care whilst undertaking the works.
5. All dimensions to be checked on site. All details and dimensions relating to sub-contractors work must be checked and agreed between the sub-contractor or supplier and the general contractor.
6. The electronic information from this drawing can not be guaranteed as dimensionally drawn exact. Figured dimensions must be used for setting out and detailing. Bright Plan Civils logos and company information must be removed from copies if information is re-used.
7. The main contractor is responsible for the design of all temporary works, and is also responsible for the safe maintenance and stability of existing buildings at all times.
8. The groundworks contractor is responsible for dealing with all occurrences of ground water during the construction period.
9. The contractor must comply with all current legislation relating to health & safety.
10. All products specified shall be installed in strict accordance with the manufacturers recommendations and instructions. If there are discrepancies between that information and the details on any Bright Plan Civils drawings, the manufacturers instructions must be used.
11. All earthworks shall be in accordance with Specification for Highway Works with 6F1 or 6F2 material used to increase levels where required

RESIDUAL HAZARDS

In addition to the hazards/risks normally associated with the type of work detailed on this drawing, note the following:

1. Buried services. Contractor to refer to record drawings and use CAT to locate existing services and undertake necessary precautions and investigation prior to excavating.
2. Working in live traffic. Contractor to ensure traffic management is designed, erected and maintained to protect the workforce and the public. Contractor to undertake necessary precautions and ensure suitable traffic management is in place prior to commencement.
3. Working in live sewers. Contractor to ensure operatives are familiar and competent with the dangers of working in live sewers.
4. Excavations close to existing structures. Contractor to prepare method statement to ensure stability of existing structure.

It is assumed that all works will be carried out by a competent contractor working, where appropriate, to an approved risk assessment and method statement

Rev.	Date	Amendments
-	-	Original Issue

BP CIVILS
Infrastructure Design and Transport Planning Consultants
2 West Barn, Norton Lane, Chichester, West Sussex PO20 3AF
Tel: 0333 358 3260
www.bpcivils.co.uk enquiries@bpcivils.co.uk

Drawing Status: FOR APPROVAL
NOT FOR CONSTRUCTION

Client: Foreman Homes

Project: Summer Lane, Pagham, West Sussex

Drawing Title: Private Drainage Details Sheet 1

Scale at A1	Date	Drawn By	Checked By	Project No.
AS SHOWN	Jul 24	JHL	MJA	D2240

Drawing No. 000-BPC-WD-ZZ-D-C-6020 Rev. -