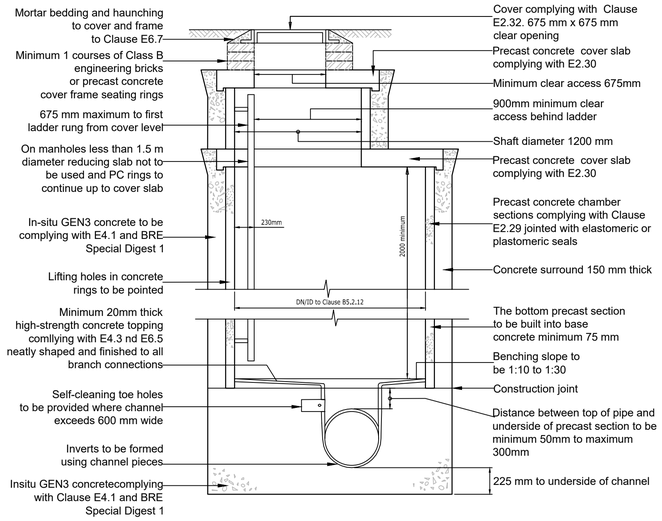

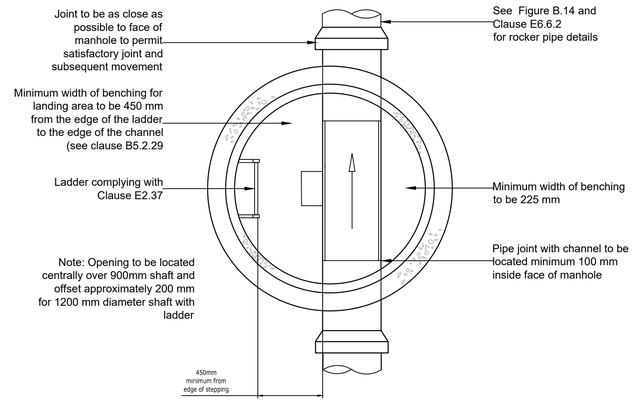

FIGURE B5
TYPICAL MANHOLE DETAIL - TYPE A1

Depth from cover level to pipe soffit 3.0 - 6.0m
Rigid material construction with concrete surround

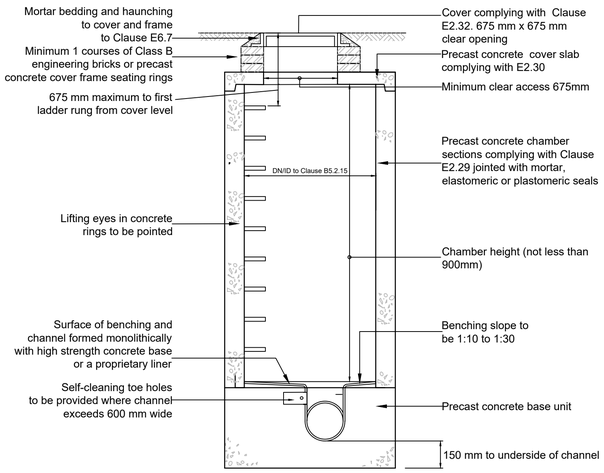

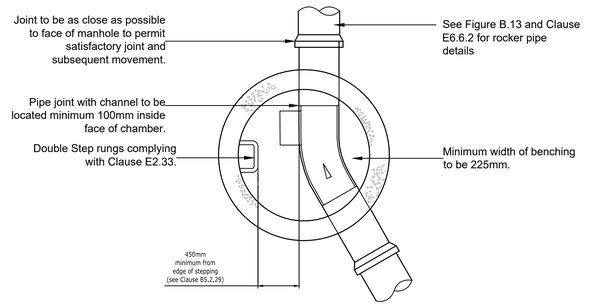

FIGURE B9
TYPICAL MANHOLE DETAIL - TYPE B

Depth from cover level to pipe soffit 1.5 - 3.0m
Rigid material construction without concrete surround

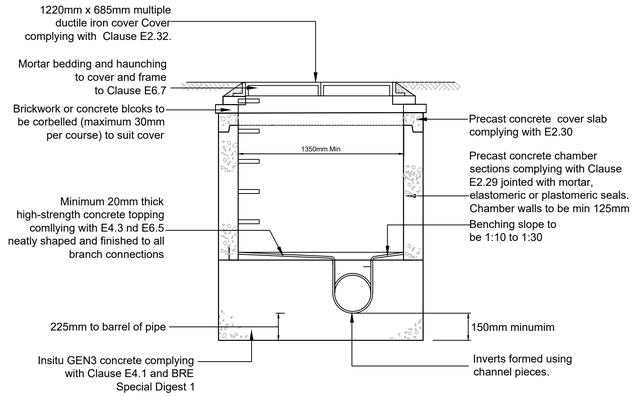

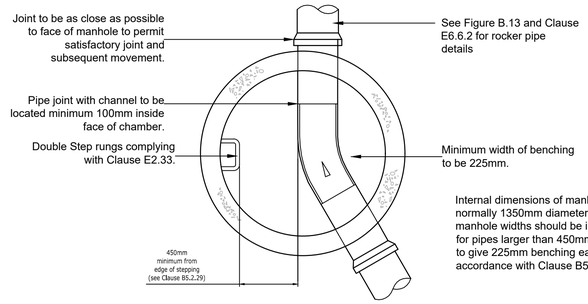

FIGURE B15
TYPICAL MANHOLE DETAIL - TYPE C2

Depth from cover level to pipe soffit less than 1.5m
Rigid material construction without concrete surround

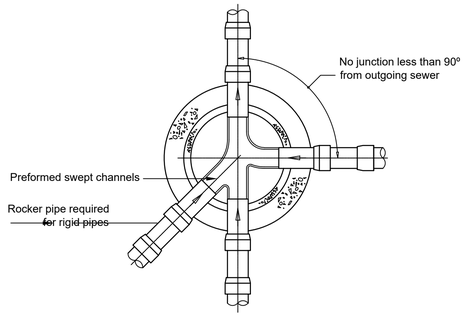

Sectional Plan

Rigid pipes built into manhole should have a flexible joint as close as feasible to the external face of the structure and the length of the next rocker pipe should be as shown.

Nominal diameter (mm)	Maximum effective length (m)
150 - 600	0.6
601 - 750	1.00
over 750	1.25

All pipes entering the bottom of the manhole to have soffits level.

FIGURE B13
TYPICAL ARRANGEMENT OF PIPE JUNCTIONS WITHIN MANHOLES

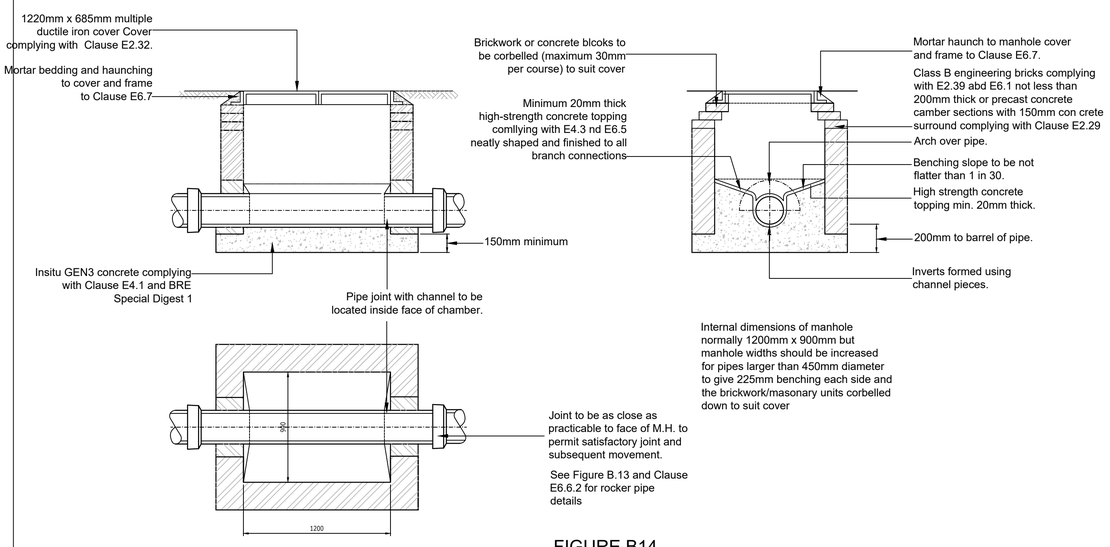

FIGURE B14
TYPICAL MANHOLE DETAIL - TYPE C1

Depth from cover level to pipe soffit less than 1.5
Maximum pipe size 450mm diameter
Rigid material construction

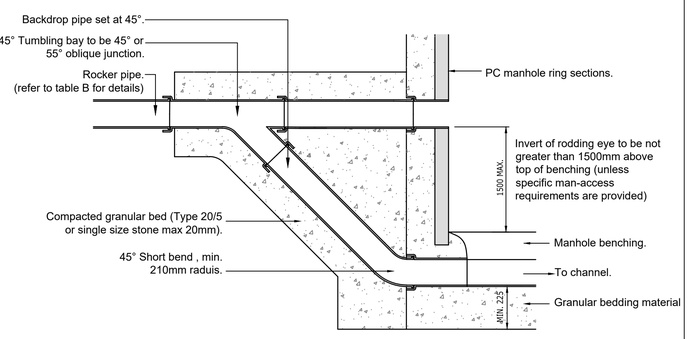

FIGURE B17
TYPICAL RAMPED BACKDROP

NOTES

A1

1. This drawing is to be read in conjunction with all other Bright Plan Civils drawings, and with all relevant Architect's and Engineer's drawings and specification. Any discrepancies found are to be reported immediately to the Engineer.
2. Bright Plan Civils accepts no responsibility for inaccuracies in data provided by third parties such as topographic surveys or Ordnance Survey mapping.
3. Do not scale, work to figured dimensions only. All dimensions are in millimeters unless noted otherwise and all levels are in metres from the topographic survey datum.
4. Any information given regarding existing underground services is given in good faith after consultation with the relevant authority, however accuracy is not certain. The main contractor is responsible for checking all information on site prior to work commencing and taking due care whilst undertaking the works.
5. All dimensions to be checked on site. All details and dimensions relating to sub-contractors work must be checked and agreed between the sub-contractor or supplier and the general contractor.
6. The electronic information from this drawing can not be guaranteed as dimensionally drawn exact. Figured dimensions must be used for setting out and detailing. Bright Plan Civils logos and company information must be removed from copies if information is re-used.

RESIDUAL HAZARDS

In addition to the hazards/risks normally associated with the type of work detailed on this drawing, note the following:

1. Buried services. Contractor to refer to record drawings and use CAT to locate existing services and undertake necessary precautions and investigation prior to excavating.
2. Working in live traffic. Contractor to ensure traffic management is designed, erected and maintained to protect the workforce and the public. Contractor to undertake necessary precautions and ensure suitable traffic management is in place prior to commencement.
3. Working in live sewers. Contractor to ensure operatives are familiar and competent with the dangers of working in live sewers.
4. Excavations close to existing structures. Contractor to prepare method statement to ensure stability of existing structure.

It is assumed that all works will be carried out by a competent contractor working, where appropriate, to an approved risk assessment and method statement.

All adoptable drainage works to be constructed as detailed in the Code for Adoption Design and Construction Guidance

S38 APPLICATION REFERENCE PS83531_01

S104 APPLICATION REFERENCE N0024875

IWNL SECTION 104 ADOPTION NOTE:

IWNL means 'Independent Water Networks' who will be the adoption authority.

All design shall be in strict accordance with DCG (The Design & Construction Guidance' pursuant to the code, Appendix C of the SSG (Sewage Sector Guidance).

Rev.	Date	Amendments
A	29.01.25	Update to IWNL comments
-	-	Original Issue

BP CIVILS
Infrastructure Design and Transport Planning Consultants
2 West Barn, Norton Lane, Chichester, West Sussex PO20 3AF
Tel: 0333 358 3260
www.bpcivils.co.uk enquiries@bpcivils.co.uk

Drawing Status: FOR APPROVAL
NOT FOR CONSTRUCTION

Client: Foreman Homes

Project: Summer Lane NORTH
Pagham, West Sussex

Drawing Title: S104 Construction Details Sheet 1

Scale at A1	Date	Drawn By	Checked By	Project No.
AS SHOWN	Jul 24	JHL	MJA	D2240

Drawing No. 000-BPC-WD-ZZ-D-C-6002 | Rev. A