SURVEY OF TREES ON LAND NORTH OF SEFTER ROAD, PAGHAM, WEST SUSSEX

Tree No.	Species	Ht (m)	Branch Spread (m) N	E	S	W	Stem diameters (cm) Single Stem	2-5 stems Stem 1	Stem 2	Stem 3	Stem 4	Stem 5	More than 5 stems Mean dia	No. stems	Height of crown (m) Height of first branch (m) (included protrusions)	Age class	Category and Estimated remaining contribution (yrs)	Condition Physiological / Structural	Tree Works to BS 3998	Root protection radius (m)	Root Protection Area (sq.m)
1	Group of field maple	9av		5av			15av							0	-	S	C2	>10	Small trees growing alongside Sefton Road.		1.80	10
2	Mixed broadleaf hedgerow	4av		2av			10av							0	-	E	B2	>20	Established maintained hedgerow. Species include field maple and hawthorn. Hedgerow punctuated by occasional small standard trees to 10m in height. These species include sycamore and ash.		1.20	5
3	Group of predominately hawthorn	7av		3av			20av							0	-	E	B2	>20	Established roadside vegetation. Other occasional species include hazel and blackthorn.		2.40	18
4	Group of sycamore	10av		4av			15av							0	-	S	C2	>10	Group of established self-set specimens growing at corner of site.	Remove.	1.80	10
5	Goat willow	11	5	7	5	3		23	31	37	35			2	2E	E	C1	>10	Large example of species. Poor fork formation just above ground level that is highly susceptible to failure. Coppicing would promote regeneration.	Remove.	7.67	185
6	Mixed broadleaf hedgerow	7av		3av			15av							0	-	E	C2	>10	Linear collection of mixed species growing alongside site. Species include sycamore, purple plum and hawthorn.		1.80	10
7	Mixed linear tree belt	11av		6av			20av							0	-	E	B2	>20	Established tree belt growing at edge of site. Species include goat willow and sycamore with occasional hawthorn and blackthorn, elder and hawthorn. Some crack willow would benefit from coppicing to promote low level generation.		2.40	18
8	Dense band of blackthorn	7av		3av			10av							0	-	S	C2	>10	Established band of vegetation growing on either side of ditch.	Remove.	1.20	5
9	English oak	13	7	7	6	7	60v							2	1.5S	E	B1	>40	Well formed broad spreading tree growing alongside ditch. Main stem and much of limb structure densely smothered in ivy preventing thorough inspection and accurate measurement.		7.20	163
10	English oak	11	7	7	6	7	55v							3	3E	E	B1	>20	Well formed broad spreading tree growing alongside dense vegetation.		6.60	137
11	Group of field maple	10av		5av			30av							0	-	S	C2	>10	Larger components of broad band of vegetation.		3.60	41
12	English oak	8	7	7	6	5	55v							2	2N	E	C1	>10	Sparsely foliated tree growing adjoin dense vegetation.		6.60	137
13	Group of hawthorn	8av		5av			30av							0	-	E	B2	>20	Cluster of large stems growing along boundary.		3.60	41
14	Field maple	9	6	6	7	5	50v							0	-	E	C1	>10	Larger component of band of vegetation at boundary.		6.00	113
15	Field maple	9	6	4	6	6						15	7	0	-	E	B1	>20	Larger component of hedgerow and conjoining with others to form a more visually component of the hedgerow.		4.76	71
16	Holm oak	7	4	3	5	4						15	6	0	-	Y	C1	>10	Young specimen self-seeded growing out of group along the boundary.		4.41	61
17	Sycamore	9	5	2	2	2	17							3	3W	Y	C1	>10	Contorted form due to competition with others.		2.04	13
18	Crack willow	9	6	7	6	2	37							0	1E	S	C1	>10	Contributing to group of other similar sized trees along boundary.		4.44	62
19	Crack willow	12	7	6	6	6		45v	30v					0	2W	E	C1	>10	Larger component of hedgerow although broad spreading form and stems liable to failure. Coppicing would promote low level regeneration. Standing amidst dense bramble preventing thorough inspection and accurate measurement.		6.49	132
20	Mixed broadleaf hedgerow	7av		3av			10av							0	-	S	B2	>20	Established maintained hedgerow running along boundary of site. Species include field maple, hawthorn and beech.		1.20	5
21	Hybrid poplar	7	3	4	2	2	27							1	1.2S	S	C1	>10	Appears to have been managed as part of the hedgerow but as it is a vigorous species it has achieved larger dimensions in this sector.		3.24	33
22	Hawthorn hedgerow	4av		1av			10av							0	-	E	B2	>20	Established hedgerow growing along boundary of adjoining garden.		1.20	5
23	Leyland cypress hedgerow	5av		2av			25av							2	2S	E	B2	>40	Established hedgerow growing along boundary of adjoining garden.		3.00	28
24	Cootwinow willow	9	5	6	5	4	55v							2	2N	E	C1	>10	Established tree growing in adjoining garden.		4.20	55
25	Leyland cypress	12	5	6	6	6	45v							2	2W	E	C1	>10	Of poor shape and form.		5.40	92
26	Leyland cypress hedgerow	5av		3av			20av							0	-	S	C2	>10	Of poor shape and form having been recently reduced in height.		2.40	18
27	Goat willow	8	5	5	5	5	25v							2	2W	S	C1	>10	Small tree growing amidst dense bramble.		3.00	28
28	Group of sycamore	10av		7av			35av							3	3N	E	B2	>20	Collection of trees growing in adjoining garden.		4.20	55
29	Weeping willow	16	8	5	7	8	65v							2	5N	E	B1	>40	Prominent, visually appealing tree growing within adjoining garden.		7.80	191
30	Holm oak	5	5	2	4	4						10	6	2	2N	S	U	<10	Dead tree. Bark is partially failed and is now lying on the ground. Remainder of crown now imbalanced.	Remove.	2.94	27
31	Pair of lawson cypress	7av		3av			15av							2	2N	S	C2	>10	Pair of small trees growing in the adjoining garden.		1.80	10
32	English oak	12	9	8	7	7	70v							2	2NE	E	B1	>40	Visually significant broad spreading tree growing along boundary.		8.40	222
33	Leyland cypress hedgerow	4av		1av			5av							0	-	Y	C2	>10	Established, but recently planted, hedgerow growing along boundary.		0.60	1
34	English oak	13	9	8	7	9	70v							2	2N	E	B1	>20	Visually significant broad spreading tree growing along boundary.		8.40	222
35	Goat willow	9	6	7	4	7						15	15	0	-	E	C1	>10	Broad spreading multi-stemmed form.		4.45	68
36	Pair of leyland cypress	14av		5av			30av							0	-	E	C1	>10	Pair of outgrown conifers growing close to boundary.		3.60	41
37	Group of sycamore	6av		2av			15av							2	2N	Y	C2	>10	Group of young stems growing alongside dilapidated shed.		1.80	10
38	Leyland cypress hedgerow	4av		2av			15av							0	-	S	C2	>10	Established hedgerow growing in adjoining garden.		1.80	10
39	Group of sycamore	9av		3av			15av							2	2N	Y	C2	>10	Group of self-set trees growing along boundary.		1.80	10
40	Predominantly hawthorn hedgerow	3av		1av			10av							0	-	Y	B2	>40	Established low level hedgerow growing alongside adjoining properties.		1.20	5
41	Field maple	10	5	5	5	5						15	6	3	3N	S	C1	>10	Small tree growing along boundary.		4.41	61
42	Leyland cypress	10	5	5	5	5	35v							0	-	E	C2	>10	Established but outgrown conifer growing alongside boundary.		4.20	55
43	Mixed broadleaf tree belt	10av		4av			25av							3	3N	S	C2	>10	Mixed row of trees growing just outside boundary. Species include field maple, Norway maple, cherry, rowan and English oak.		3.00	28
44	English oak	7	4	4	4	4	20v							2	2N	Y	C1	>10	Small tree growing amidst dense bramble.		2.40	18
45	English oak	14	8	8	9	9	65v							2	4NW	E	B1	>20	Visually significant tree growing in adjoining property.		7.80	191
46	English oak	14	9	8	7	9		55v	55v					2	2W	E	B2	>20	Visually significant broad spreading tree. Dominated by adjoining tree. Stems Combines to form a line of established mature trees along the boundary.		9.33	274
47	Field maple	9	3	2	2	5		15v	15v	15v				2	3N	Y	C1	>10	Dominated by adjoining tree. Stems partially smothered in ivy preventing thorough inspection and accurate measurements. Combines to form a line of established mature trees along the boundary.		3.12	31
48	English oak	14	7	7	7	7	65v							0	2N	E	B2	>20	Visually significant broad spreading tree. Combines to form a line of established mature trees along the boundary.		7.80	191
49	Field maple	11	8	4	6	7		45v	45v	45v	45v			2	4N	M	B2	>20	Established broad spreading tree. All stems smothered in ivy preventing thorough inspection and accurate measurement. Combines to form a line of established mature trees along the boundary.		10.80	366
50	Group of field maple	9av		4av			20av							2	2N	S	C2	>10	Cluster of small stems growing amidst dense vegetation.		2.40	18
51	Field maple	13	7	7	6	6		45v	45v	45v				3	4N	E	B1	>20	Established broad spreading tree growing at boundary. All stems smothered in ivy preventing thorough inspection and accurate measurement. Combines to form a line of established mature trees along the boundary.		9.35	275
52	Group of field maple	9av		5av			35av							2	2N	E	B2	>20	Collection of stems growing on boundary. All stems densely smothered in ivy preventing thorough inspection and accurate measurement. Combines to form a line of established mature trees along the boundary.		4.20	55
53	English oak	13	8	8	6	9	75v							2	3NW	E	B2	>20	Visually significant broad spreading tree. Lower stem densely smothered in ivy preventing thorough inspection and accurate measurement. Combines to form a line of established mature trees along the boundary.		9.00	255
54	Group of hawthorn	6av		3av			15av							2	2N	E	C2	>10	Collection of small stems growing amidst dense vegetation.		1.80	10
55	English oak	10	5	5	4	5	50v							3	3N	E	C1	>10	Sparsely foliated tree growing south of the ditch.		6.00	113
56	English oak	11	7	7	6	5		40v	40v					3	3E	E	B2	>20	Broad spreading twin stemmed tree. Both stems densely smothered in ivy preventing accurate measurement and thorough inspection. Combines to form a line of established mature trees along the boundary.		6.79	145
57	English oak	13	10	4	5	4	50v							2	5NW	E	B2	>20	Visually significant broad spreading tree. Lower stem densely smothered in ivy preventing thorough inspection and accurate measurement. Combines to form a line of established mature trees along the boundary.		6.00	113
58	English oak	14	10	4	7	5	50v							2	2N	E	B2	>20	Visually significant broad spreading tree. Lower stem densely smothered in ivy preventing thorough inspection and accurate measurement. Combines to form a line of established mature trees along the boundary.		6.00	113
59	Group of field maple	7av		4av			15av							0	-	S	C2	>10	Collection of small trees growing amidst dense vegetation.		1.80	10
60	Field maple	11	5	3	5	6	15v							2	3N	E	B2	>20	Broad spreading tree. Lower stem densely smothered in ivy. Combines to form a line of established mature trees along the boundary.		4.20	55
61	Hawthorn	9	4	3	2	2	30v							4	4N	E	C1	>10	Stands at edge of copse. Main stems densely smothered in ivy.		3.60	41
62	Group of English oak	12av		6av			45av							4	4N	E	B2	>20	Collection of stems growing at edge of small copse.		5.40	92
63	Leyland cypress of hedgerow	9av		3av			15av							2	2N	S	C2	>10	Cluster of stems growing alongside ditch.	Remove as shown.	1.80	10
64	Goat willow	7	3	3	3	3						10	10	2	2N	Y	C1	>10	Multi-stemmed form growing amidst bramble.	Remove.	3.79	45
65	Norway maple	10av		5av			25av							3	3W	S	C2	>10	Pair of young trees growing amongst brambles.		3.00	28
66	Crack willow	14	7	6	8	8	80v							0	2SW	E	B1	>20	Visually significant tree although at this size they are prone to shedding large branches.		9.60	290
67	Mixed broadleaf copse	14av		5av			35av							0	-	E	B2	>20	Collection of mixed trees growing toward boundary. Species include crack willow, sycamore, hawthorn and hornbeam. Many species are eliminated due to competition for light. There are no trees of any particular merit within the group.	Remove.	4.20	55
68	Group of field maple	13av		6av			45av							3	3W	M	B2	>20	Established and older components of copse. Growing alongside ditch. All stems densely smothered in ivy preventing thorough inspection and accurate measurement.		5.40	92
69	Poplar	18	10	8	9	7	90v							4	3SW	E	C1	>10	Established example of this vigorous species. Species is prone to shedding large limbs as it matures.		10.80	366
70	Pair of sycamore	13av		6av			35av							2	2N	E	C2	>10	Pair of established sycamores growing in adjoining garden. All stems densely smothered in ivy preventing thorough inspection and accurate measurement.		4.20	55
71	English oak	10	5	3	3	3	25v							2	2N	S	C1	>10	Small sinsihapen tree growing alongside road. Lower stems densely smothered in ivy preventing thorough inspection and accurate measurement.		3.00	28
72	Sycamore	11	4	3	4	4	25v							3	3S	S	C1	>10	Small tree growing alongside road. Main stem densely smothered in ivy.		3.00	28
73	Holm oak	10	3	1	2	4	25v							3	3S	S	C1	>10	Misshapen form due to competition with other trees.	Remove.	3.00	28
74	English oak	11	7	4	3	3		20v	25v					2	2N	S	C1	>10	Misshapen form due to competition with other trees. Some have growing has been suppressed by overhanging branches.	Remove.	3.84	46
75	Sycamore	10	3	3	4	5	30v							2	2N	S	C1	>10	Small tree smothered in ivy.	Remove.	3.60	41
76	Sycamore	10	5	4	4	3	25v							2	2S	S	C1	>10	Small tree smothered in ivy.	Remove.	3.00	28
77	Sycamore	10	5	3	3	3	20v							2	2N	S	C1	>10	Small tree smothered in ivy.	Remove.	2.40	18
78	Sycamore	11	5	2	4	3	25v							2	2N	S	C1	>10	Small tree smothered in ivy.	Remove.	3.00	28
79	Sycamore	11	6	3	5	7	35v							2	1.2NE	S	C1	>10	Small tree smothered in ivy.		4.20	55
80	Mixed broadleaf hedgerow	3av		2av			10av							0	-	E	C2	>10	Sparse hedgerow contains primarily hazel with occasional hawthorn.	Remove.	1.20	5
81	Turkey oak	12av		5av			35av							3	3N	S	B2	>20	Established trees growing to south of Sefter Road.		4.20	55
82	Ash	5	6	6	6	6	42							2	4SW	E	B1	>40	Well formed and established tree growing in broad grass verge.		5.04	80
83	English oak	13	5	7	7	7	115v							2	2W	OM	A1	>40	Veteran tree retained in cottage by junction of Rose Green Road with Sefter Road.		13.80	598
84	Pair of elm	5av		3av			15av							2	2S	S	C2	>10	Pair of retained elms growing in cottage of cottage.		1.80	10
85	Norway maple	15	9	7	7	8	59							3	3S	E	B1	>20	Visually significant tree growing alongside Rose Green Lane.		7.08	157
86	Group of holly and laburnum	6av		3av			20av							0	-	S	C2	>10	Group of small ornamentals in cottilage of property fronting Rose Green Lane.		2.40	18
87	Monterey cypress	12	7	5	6	6	55v							2	2E	E	C1	>10	Sparsely foliated due to infection of cypress canker.		6.60	137
88	Maritime pine	6	3	4	4	4	45v							2	2N	E	C1	>10	Small ornamental tree growing in adjoining property in Grosvenor Way.		5.40	92
89	Eucalyptus	6	3	4	2	3		20v	20v	20v	20v			2	2N	S	C1	>10	Small tree contained in size.		4.80	72
90	Sycamore	10	5	5	5	5	35v							3	3E	S	C1	>10	Small tree growing in adjoining garden.		4.20	55
91	Swedish beam tree	11	4	5	5	4	45v							2	2S	S	C1	>10	Established tree growing in garden.	Remove.	5.40	92
92	Group of sycamore	7av		3av			20av							0	-	S	C2	>10	Cluster of small trees growing in garden.	Remove.	2.40	18
93	Weeping willow	10	6	6	6	6	80v							3	4N	E	B1	>20	Visually significant tree growing in garden to south of Rose Green Lane. Regularly maintained by pollarding.		9.60	290
94	Group of silver birch	11av		4av			30av							2	2N	E	C2	>10	Collection of stems growing in property to south of Rose Green Lane.		3.60	41

KEY TO TREE SCHEDULE

Column Heading	Explanation
Tree No.	Unique number corresponding with number on plan
Species	English names
Ht (m)	Height in metres
Branch Spread	Crown radius in metres to cardinal points of the compass
Stem Dia	All measurements conform to Annex C of BS 5837:2012 Single stem - Stem diameter in centimetres measured at 1.5m above ground level. Multi-stemmed tree with 2 to 5 stems - Diameter of each stem Multi-stemmed tree with more than 5 stems - Average stem diameter and number of stems
Height of crown clearance	Height in metres between the ground and underside of canopy
Height of first major branch and direction of growth	Height from ground level to base of first major branch and the approximate direction of growth
Abbreviations as suffix to a dimension	Suffix 'e' denotes an estimated dimension Suffix 'av' denotes an average dimension
Age Class	Age Class definitions: Y = Young S = Semi-mature E = Early mature M = Mature O = Over mature
Category grading and Estimated remaining Contribution (yrs)	Summary of BS 5837: 2012 categorisation: 1. Trees unsuitable for retention: U = those in such a condition that they cannot realistically be retained as living trees in the context of the current land use for longer that 10 years 2. Trees to be considered for retention: A1, 2 or 3 = trees of high quality (substantial contribution >40 yrs) B1, 2 or 3 = trees of moderate quality (significant contribution >20 yrs) C1, 2 or 3 = trees of low quality (but adequate, ie >10 yrs or young trees - until new planting can be established)
Estimated remaining contribution	Note: Useful estimated remaining contribution of the tree or tree group based on figures stated in BS5837:2012
Condition	Brief description including physiological and structural defects
Tree Works	Works required to be undertaken to the trees to facilitate the construction of remediate a defect encountered during the survey
Root Protection Radius	Radius of minimum root protection area in metres calculated from section 4.6 and Annex D of BS5837:2012
Root Protection Area	Total area of minimum root protection area extrapolated from root protection radius

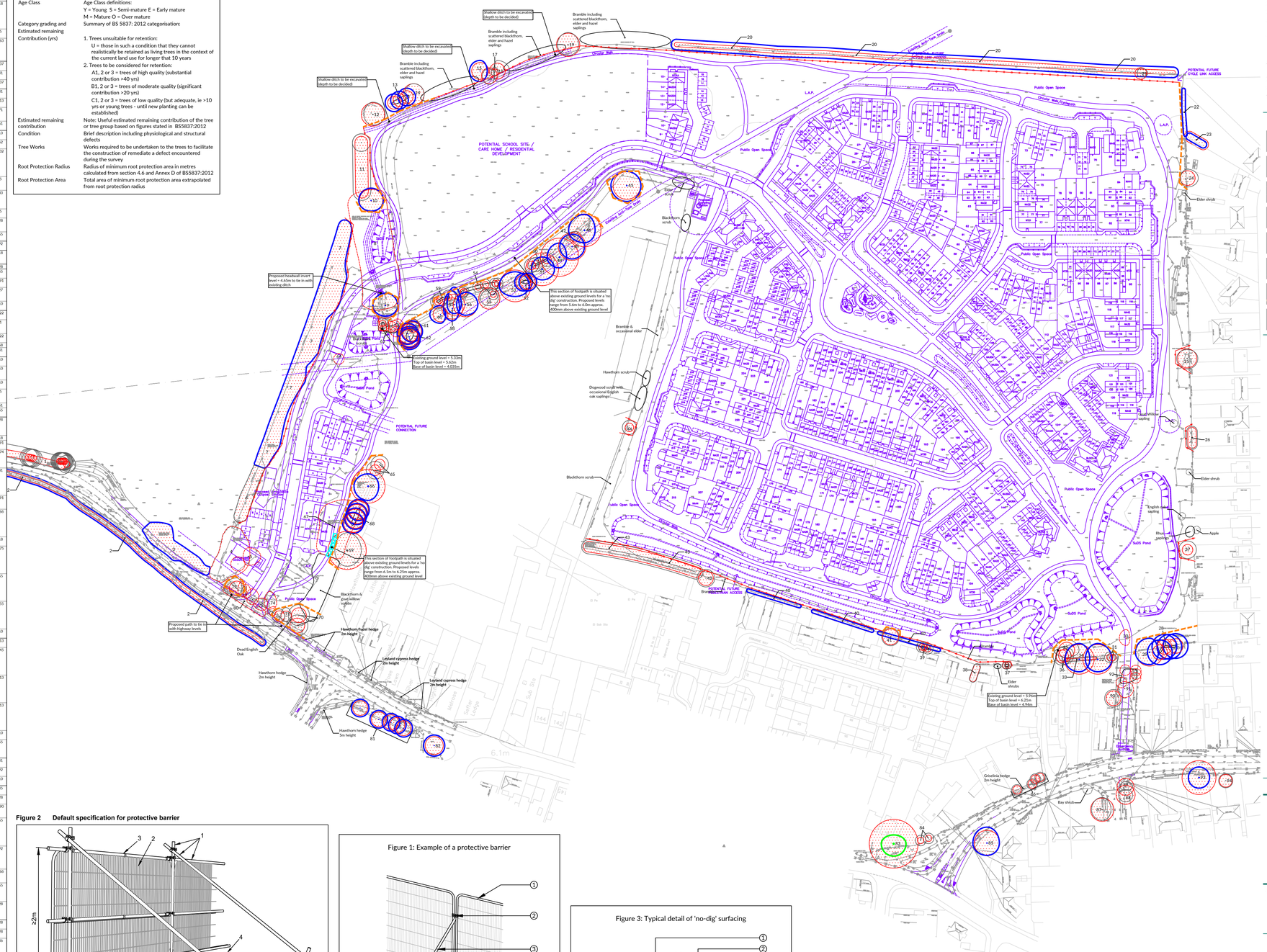

Figure 2 Default specification for protective barrier

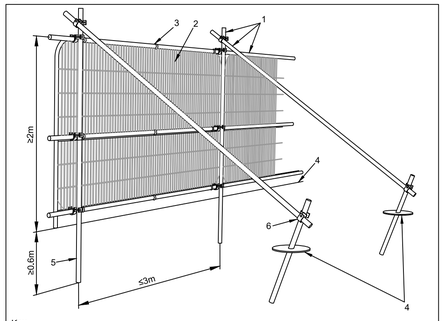

Key
1 Standard scaffold poles
2 Heavy gauge 2m tall galvanized tube and welded mesh infill panels
3 Panels secured to uprights and cross-members with wire ties
4 Ground level
5 Uprights driven into the ground until secure (minimum depth 0.6m)
6 Standard scaffold clamps

Figure 1: Example of a protective barrier

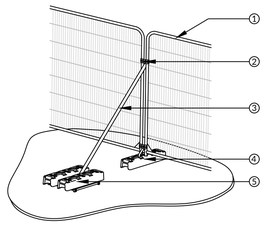

1. Steel mesh panel
2. Connectors fitted to secure panels
3. Diagonal strut
4. Block feet to avoid driven scaffold poles
5. Block tray weighted with blocks

© Keen Consultants

Figure 3: Typical detail of 'no-dig' surfacing

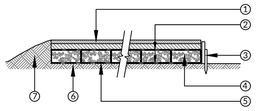

1. Surface material to engineer's specifications
2. Geotextile separation fabric as specified by engineers
3. Treated timber edging supported on timber posts or concrete gravel boards supported on concrete spur posts if required
4. 40/20mm clean angular stone
5. Cellular confinement system to engineer's specification and depth
6. Existing ground levels retained (no excavation)
7. Soil fillet can be used at edges

© Keen Consultants

NORTH

0 10m 25m 50m 100m

NOTES
1. The original of this drawing was produced in colour - a monochrome copy should not be relied upon.
2. Scale for planning purposes only.
3. All dimensions to be checked on site.
4. The copyright of this document resides with Keen Consultants unless assigned in writing by the company.
5. Details shown on this drawing are devised with reference to *BS5837:2012:Trees in relation to design, demolition and construction - Recommendations.*
6. Check if Tree Preservation Order or Conservation Area protection applies to trees before undertaking tree works.
7. Topographical survey based on mksurveys project number 22496.
8. Tree numbers 10, 14, 22, 23, 33, 38, 40, 68, 69 & 80 plotted by eye.
9. Planning Layout based on Copper Baillie Limited drawing number CB_84_139_001 Rev C.

KEY
- Existing site features
- Proposed structures
- Trees retained
- Root Protection Area (RPA)
- Trees for removal
- 2.0m high barrier as detail in Figure 1
- Default protective barrier as detail in Figure 2
- Minimum extent of no-dig construction. Actual deployment may be greater. As detail in Figure 3

Rev	Description	Date
F	Default protective barrier and root protection area shown as suggested by tree officer	10.06.21
E	Latest layout overlay	22.03.21
D	Latest layout overlay	27.01.21
C	New layout overlay	08.12.20
B	Latest layout overlay	28.02.20
A	Latest layout overlay	26.02.20
0	Preliminary issue	09.12.19

KEEN CONSULTANTS
The Studio, Timbers, Gables Road, Church Crookham Fleet, Hampshire GU52 6QY
T 01252 850096
mail@keenconsultants.co.uk
keenconsultants.co.uk
Keen Consultants is a trading name of Keen (Europe) Limited. Registered No.: 12641584
Registered office: 4 Sudley Road, Bognor Regis, West Sussex, PO21 1EU

Client
TAYLOR WIMPEY

Project
LAND NORTH OF SEFTER ROAD, PAGHAM

Title
TREE PROTECTION PLAN

Date: DEC 2019
Scale: 1:1250@A1
Drawn by: ML
Checked by: JTK

Drawing Number
9260-KC-XX-YTREE-TPP01RevF