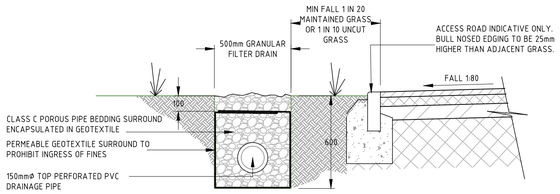

DETAIL A - TYPICAL SECTION THROUGH FILTER DRAIN IN SOFT LANDSCAPED AREAS

1:20

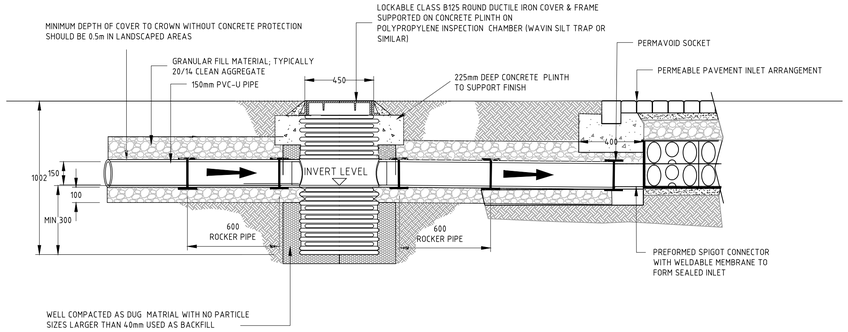

DETAIL B - TYPICAL SECTION THROUGH FILTER DRAIN INSPECTION CHAMBER/SILT TRAP SITUATED IN SOFT LANDSCAPED AREAS SHOWING INLET TO PERMEABLE PAVING STRUCTURE

1:20

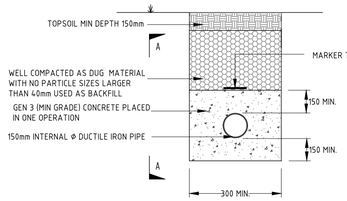

DETAIL C - TYPICAL SECTION THROUGH SURFACE WATER PIPE SITUATED IN SOFT LANDSCAPED AREA WITH COVER DEPTH LESS THAN 0.6m

150mmØ DUCTILE IRON PIPE

1:20

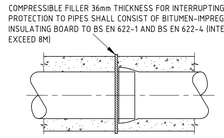

SECTION A-A

NTS

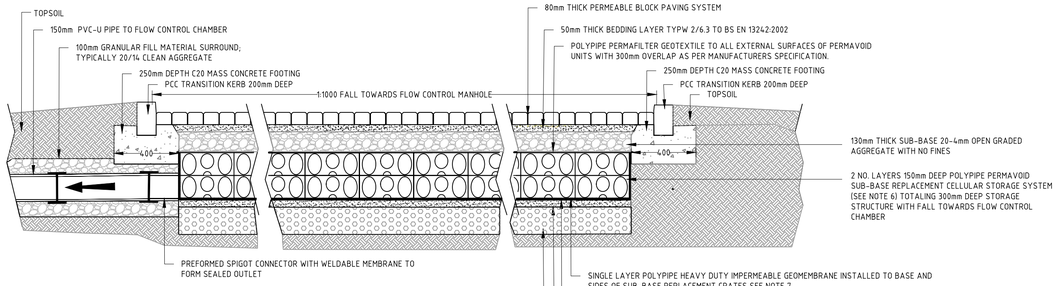

DETAIL E - TYPICAL SECTION THROUGH NORTHERN CATCHMENT PERMEABLE BLOCK PAVING INCORPORATING POLYPIPE PERMAVOID SUB-BASE REPLACEMENT ATTENUATION SYSTEM

Scale (1:20)

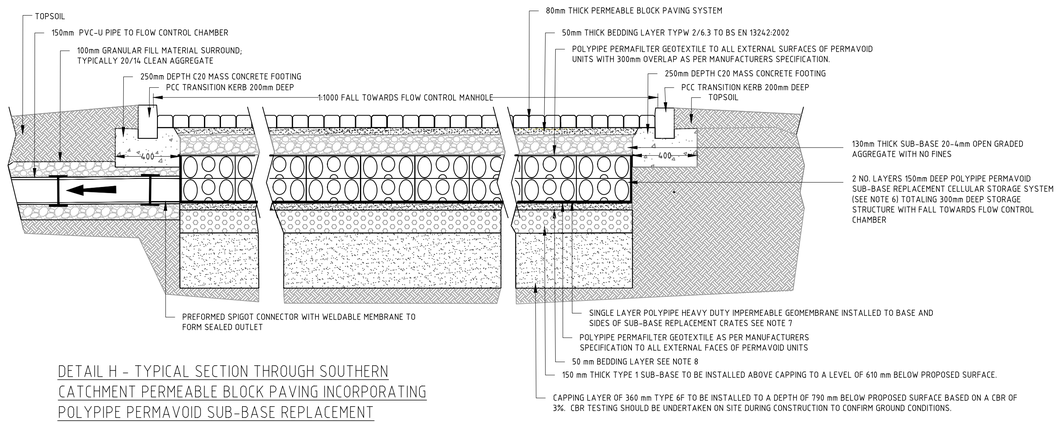

DETAIL H - TYPICAL SECTION THROUGH SOUTHERN CATCHMENT PERMEABLE BLOCK PAVING INCORPORATING POLYPIPE PERMAVOID SUB-BASE REPLACEMENT ATTENUATION SYSTEM

Scale (1:20)

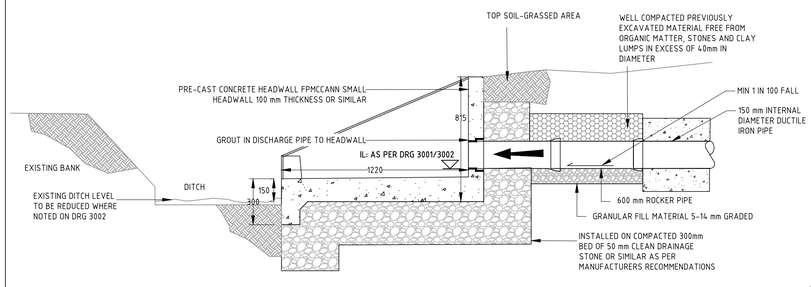

DETAIL D - TYPICAL SECTION THROUGH SURFACE WATER DISCHARGE HEADWALL

1:20

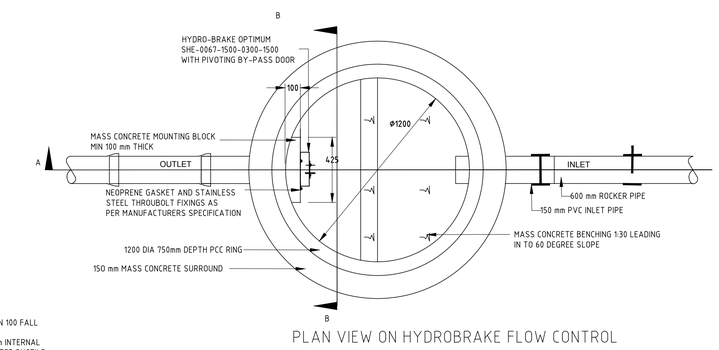

PLAN VIEW ON HYDROBRAKE FLOW CONTROL CHAMBER SWMH 01

1:20

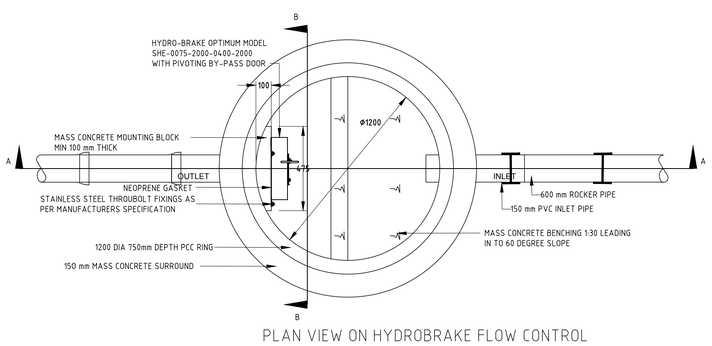

PLAN VIEW ON HYDROBRAKE FLOW CONTROL CHAMBER SWMH 07

1:20

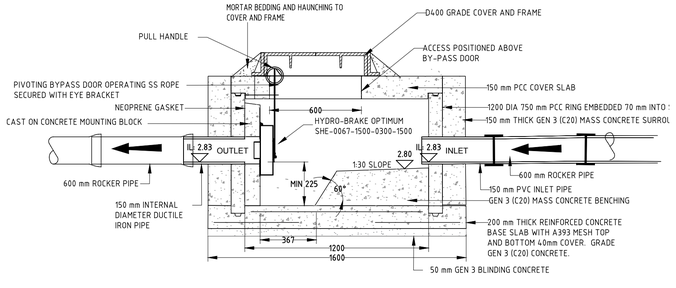

DETAIL F - SECTION THROUGH HYDROBRAKE FLOW CONTROL CHAMBER SWMH 01

1:20

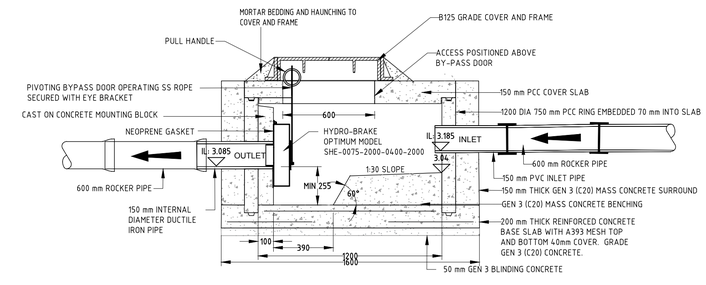

DETAIL G - SECTION THROUGH HYDROBRAKE FLOW CONTROL CHAMBER SWMH 07

1:20

COPYRIGHT - THIS DRAWING AND ANY ANCILLARY DRAWINGS OR DATA ARE COPYRIGHT OF NIJHUIS H2OK LTD AND MAY NOT BE USED, COPIED OR AMENDED FOR ANY PURPOSE WHATSOEVER WITHOUT WRITTEN APPROVAL.

NOTES

1. THIS DRAWING IS COPYRIGHT. REFER TO DETAILS ABOVE.
2. THIS DRAWING IS ONLY TO BE USED FOR THE PURPOSES DESCRIBED IN THE STATUS BOX BELOW. WORK TO FIGURED DIMENSIONS ONLY, DO NOT SCALE.
3. THIS DRAWING IS TO BE READ IN CONJUNCTION WITH ALL OTHER DRAWINGS, DETAILS AND SPECIFICATIONS PERTAINING TO THE WORK DESCRIBED. THE RELEVANT DRAWINGS ARE 3001 AND 3002.
4. MATERIALS AND WORKMANSHIP SHALL COMPLY TO THE APPROPRIATE BRITISH STANDARDS AND CODES OF PRACTICE UNLESS OTHERWISE STATED.
5. THE ACTIVITIES REQUIRED TO CONSTRUCT THE WORK, SHOWN ON DRAWINGS CLEARLY MARKED FOR CONSTRUCTION, MAY BE SUBJECT TO THE PROVISIONS OF THE CONSTRUCTION (DESIGN AND MANAGEMENT) REGULATIONS 2015 THE CONTRACTOR AND CLIENT MUST ENSURE THAT THEY ARE ADEQUATELY CONVERSANT WITH THESE REGULATIONS AND THAT THE APPROPRIATE PROCEDURES REQUIRED UNDER THE REGULATIONS ARE OBSERVED AT ALL TIMES.
6. STORMWATER ATTENUATION/INFILTRATION SYSTEM SHALL BE POLYPIPE-PERMAVOID PRE-FORMED MODULAR GEOCELLULAR SUB-BASE REPLACEMENT WITH MINIMUM 95% VOLUMETRIC VOID RATIO AND MINIMUM 52% EFFECTIVE PERFORATED SURFACE AREA. UNITS SHALL BE MANUFACTURED WITH INTEGRAL INTERLOCKING TIES (POLYPIPE-PERMATIES) TO MAINTAIN RIGIDITY AND MINIMISE DEFLECTION. GEOCELLULAR UNITS TO BE FULLY ENCAPSULATED WITH HEAVY DUTY GEOTEXTILE FLEECE AND IMPERMEABLE MEMBRANE. GEOCELLULAR LAYER TO BE IN ACCORDANCE WITH THE SPECIFICATION AND BS7533:2009 PT13. ALL TO BE INSTALLED IN ACCORDANCE WITH THE MANUFACTURER'S RECOMMENDATIONS. SHEAR CONNECTORS BETWEEN VERTICAL LAYERS SHOULD BE INSTALLED TO MAINTAIN RIGIDITY AND MINIMISE LATERAL DISPLACEMENT IN ACCORDANCE WITH BS7533:2009 PT13. SHEAR CONNECTIONS TO BE FITTED IN ACCORDANCE WITH MANUFACTURERS RECOMMENDATIONS.
7. WATERPROOF GEOMEMBRANE TO BE SINGLE LAYER COLD APPLIED ROBUST WELDED FLEXIBLE MEMBRANE AS PER SPECIFICATION SUITABLE FOR WATERPROOFING TO STRUCTURES AND FOR WATER CONTAINMENT. MEMBRANE TO BE NOMINAL 1MM THICK LAID WITH MINIMUM 120MM LAPS AND WELDED SEAMS. TO BE INSTALLED IN ACCORDANCE WITH THE MANUFACTURER'S RECOMMENDATIONS UNDER AND APPROVED CQA PROTOCOL THAT INCLUDES TESTING OF THE WELDS.
8. POLYPIPE-PERMAVOID UNITS TO BE LAID ON A PREPARED EVEN FORMATION THAT SHALL BE FREE FROM UNDULATIONS, SHARP STEPS OR PROTRUDING STONES/ROCKS. THE FORMATION SHALL BE GRADED TO ACHIEVE A MAXIMUM DEVIATION OF 5MM IN 3.0M IN ANY DIRECTION. THE FORMATION SHALL HAVE AN EQUILIBRIUM CBR VALUE GREATER THAN 6%. A 50mm THICK BLINDING LAYER OF CRUSHED CLEAN ROCK IN ACCORDANCE WITH THE SPECIFICATION MAY BE USED TO ACHIEVE A SUITABLE BEDDING SURFACE.. THE CRUSHED CLEAN ROCK SHALL BE 2/6.3 AGGREGATE IN ACCORDANCE WITH BS EN 13242:2002 AND BS7533:2009 PT13. THE BLINDING LAYER SHALL BE PLACED TO GIVE A SMOOTH, EVEN AND FIRM FORMATION. THE FORMATION AND BLINDING SHALL BE INSPECTED BY THE ENGINEER AND CONTRACTOR TO ENSURE THAT THEY ARE ACCEPTABLE FOR THE CONSTRUCTION OF POLYPIPE-PERMAVOID.
9. DESIGN RISK ASSESSMENT

   A RISK ASSESSMENT RELATING TO POTENTIAL HAZARDS ASSOCIATED WITH THE CONSTRUCTION, OPERATION AND DEMOLITION OF THE WORK DESCRIBED WITHIN THIS DRAWING, IN SO FAR AS IT HAS BEEN DESIGNED BY NIJHUIS H2OK LTD, HAS BEEN UNDERTAKEN. RISKS SO IDENTIFIED HAVE BEEN ELIMINATED BY DESIGN WHEREVER PRACTICABLE. THE SITUATION WITH REGARD TO RESIDUAL RISKS IS AS FOLLOWS:

   THE WORK IS OF LOW COMPLEXITY WITH LOW LEVEL OF RISK; IT IS CONSIDERED THAT THERE ARE NO SIGNIFICANT RESIDUAL RISKS THAT WOULD NOT BE READILY FORESEEABLE BY A COMPETENT CONTRACTOR, OBSERVING GOOD WORKING PRACTICES.

DESIGNER - NIJHUIS H2OK DRAWING REVISION - A
DATE - 19:07:17

DATE.	DRWN.	CHKD.	APPR.	REV.	NOTES.
19:07:17	AW	WOM		A	FOR PLANNING

PROJECT MANAGER:-	DANIEL KENNARD
ASSISTANT:-	ANDY WOOLLEY
DRAWN DATE:-	JULY 2017
SCALE & SHEET SIZE:-	AS SHOWN @ A1

FOR PLANNING

nijhuis INDUSTRIES i-CONSULT

- Waste to Value (AD/Biogas)
- Industrial Effluent Treatment
- Sewage Treatment
- Flood Risk Management/SUDS
- Design Consultancy
- Service and Maintenance

Nijhuis H2OK Ltd. | nh2ok@nijhuisindustries.com | www.nijhuisindustries.com/consultancy
Head Office: +44 (0)333 7000 007 |
Truro Office | Nanjerrick Court, Allet | Truro, Cornwall | TR4 9DJ | United Kingdom
Bristol Office | Unit 16, Avonbank Industrial Centre | Avonmouth, Bristol | BS11 9DE | United Kingdom

CLIENT

BOURNE LEISURE

PROJECT

CHURCH FARM GOLF DEVELOPMENT, CHURCH FARM HOLIDAY PARK, PAGHAM, PO21 4NR

DRAWING TITLE

CHURCH FARM GOLF DEVELOPMENT SECTIONS AND DETAILS

PROJECT No.	DRAWING No.	REV.
J-11399	3401	A