Gravel Strip at End of Garden Patio
Typical Detail

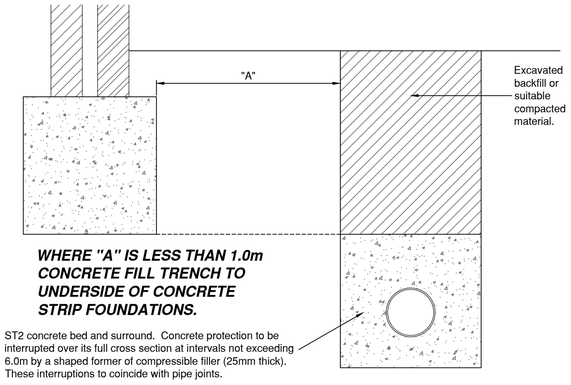

Pipe Runs Near Buildings

NOTE: THIS DETAIL IS NOT APPLICABLE WHERE BUILDINGS HAVE PILED FOUNDATIONS.

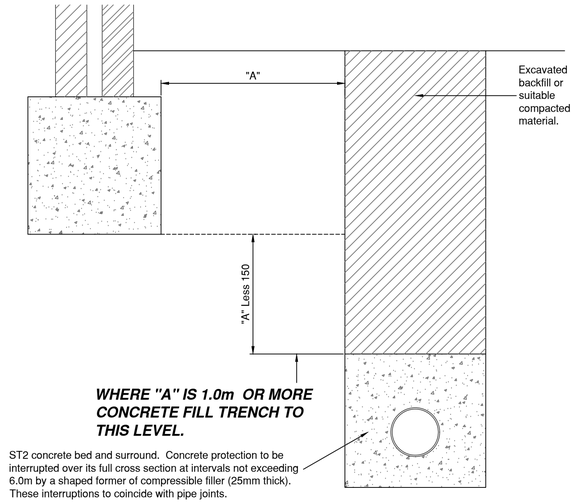

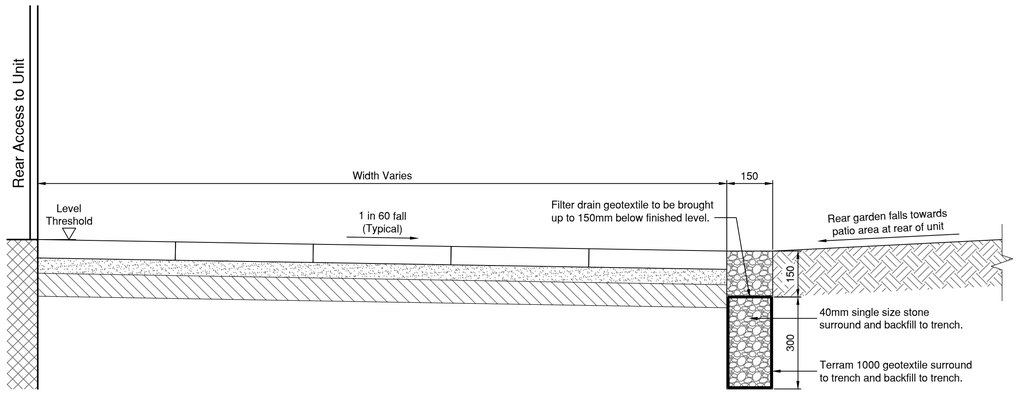

Gravel Strip at End of Garden Patio
Typical Detail

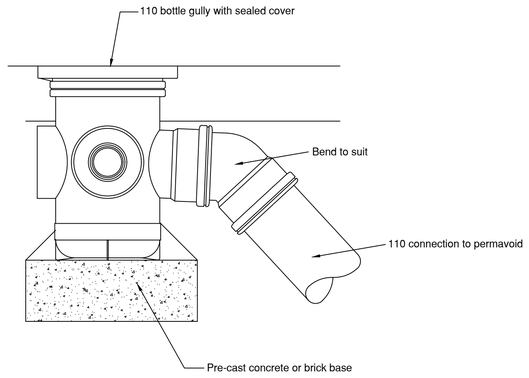

B

Bottle Gully

To be upstream of all permavoid diffuser details.

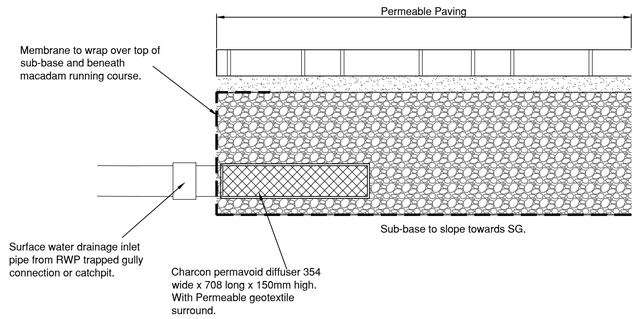

Typical Permavoid Inlet

NOTES

1. This drawing is to be read in conjunction with Foul Water Longitudinal Sections (DSM-E4761-201 to 203), Surface Water Longitudinal Sections (DSM-E4761-220 to 221) , S104 Adoption Layout, Foul Water Manhole Schedules (DSM-E4761-412), Surface Water Manhole Schedules (DSM-E4761-415-416) Domestic Drainage Layouts (DSM-E4761-451 to 455) and other Domestic Drainage Construction Details.
2. All dimensions are in millimetres unless stated otherwise.
3. Do not scale from this drawing. Only written dimensions are to be used.
4. All works to be constructed in accordance with WRc Sewers for Adoption - 6th Edition & Interim Addendum and the specific requirements of Southern Water Water.
5. Refer to geotechnical report for sulphate resisting class and ACEC class.
6. Insitu concrete generally to be GEN 4 Designated Mix.
7. Insitu reinforced concrete to be RC 35 Designated Mix only when specified.
8. Where sulphates present, Consulting Engineer to confirm concrete and mortar specification.
9. All insitu concrete to be thoroughly compacted.
10. Typical domestic inspection chamber and manhole details shown on this drawing, widths and lengths will vary as follows:-
11. All covers to be stamped "FW" or "SW", as appropriate.
12. For Manufacturer and specification of pipes and fittings refer to drainage layout and schedule.
13. Drainage pipes and fittings to be Hepworth vitrified clay and PVCu or Wavin Osma PVCu or other equavalent approved. Refer to drainage layout and schedules for details of manufacturer and specification.
14. Mild steel fabrication to be hot dip galvanised to BS EN 1461.
15. ***Outgoing pipes greater than 600mm dia. should be fitted with guard bars, safety chains [to BS4942:pt 2 and BS 729] or other safety devices in accordance with the Southern Water safety policy.***

DEPTH OF PIPE COVER

The minimum depth of pipe cover to the crown of gravity pipes without protection should be as follows:

- domestic gardens and pathways without any possibility of vehicular access, 0.35m;
- domestic driveways, parking areas and yards with height restrictions to prevent entry by vehicles with a gross weight in access of 7.5 tonnes, 0.5m;
- domestic driveways, parking areas and narrow streets without footways (e.g., mews developments) with limited access for vehicles with a gross weight in excess of 7.5 tonnes, 0.9m;
- agricultural land and public open space, 0.9m;
- other highways and parking areas with unrestricted access to vehicles with a gross vehicle weight in excess of 7.5 tonnes, 1.2m.

CDM NOTES

1. EXISTING SERVICES. Depth of existing services must be determined prior to works commencing. The contractor is responsible for establishing underground services in accordance with HSE Guidance note HS (G) 47. Any services which would be within the proposed construction layers must be lowered to below the sub-base.

Rev.	Date	Details	By	Chkd	Appd
B	05.06.20	Bottle gully detail added.	NW	AC	TRS
A	06.03.20	Permavoid construction detail added.	GD-I	LD	TRS

Client:-

DREW SMITH LIMITED

Site:-
SUMMER LANE
PAGHAM

Drawing Title:-
DOMESTIC DRAINAGE CONSTRUCTION DETAILS
SHEET 2 OF 2

Date: February 2020 | Scales: Not to scale at A1
Drawn: GD-I | Checked: LD | Approved: TRS

Drawing No.
DMS/E4761/461 B

INITIAL TENDER ISSUE
SUBJECT TO PLANNING APPROVAL

RCP ARCHITECTURE & CIVIL ENGINEERING
Rogers Cory Partnership
Architectural and Civil Consultants
The Old School Old School Road
Hook Hampshire RG27 9NJ
T: 01256 769269 E: mail@rcpconsultants.co.uk W: rcpconsultants.co.uk

APUN DISTRICT COUNCIL P/19/0370/OC