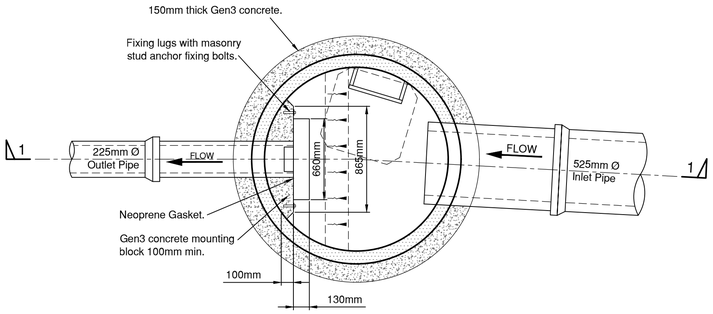

Plan

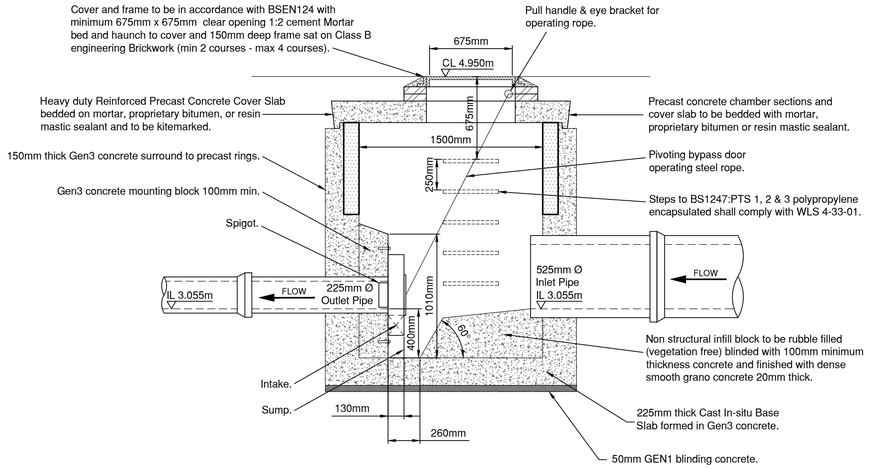

Section 1-1

Control Chamber Detail SW-2

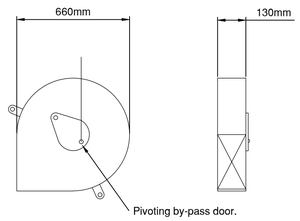

Vortex Flow Control
Flow Rate = 7.9 l/s
Head = 1.450m

SHE-0124-7900-1450-7900 Hydro-Brake Optimum
to be supplied by Hydro International
Tel: 01275 878371

NOTES

1. This drawing should be read in conjunction with SuDS Features General Arrangement Layouts (DSM/E4761/431 & 432) and SuDS Features Headwall Construction Details (DSM/E4761/433 & 434) and SuDS Features Setting Out Layouts (DSM/E4761/436 & 437).
2. All dimensions are in millimetres unless stated otherwise.
3. Do not scale from this drawing. Only written dimensions are to be used.
4. Whilst all Surface Water Sewers are to remain private, all construction to be in accordance with Sewers for Adoption - 6th Edition & Interim Addendum and the specific requirements of Southern Water.
5. Refer to geotechnical report for sulphate resisting class and ACEC class.
6. ***Outgoing pipes greater than 600mm diameter should be fitted with guard bars, safety chains [to BS4942:pt 2 and BS 729] or other safety devices in accordance with the Southern Water safety policy.***
7. Hydrobrake to be installed before cover slab finally fixed in place.
8. Where height of mounting block is to be confirmed, this is to be determined on site once Hydrobrake is delivered, or advice sought from Hydro International when order is placed.
9. ***ANY VARIANCE OR DISCREPANCY MUST BE REPORTED BACK TO RCP ENGINEERING BEFORE WORK BEGINS.***

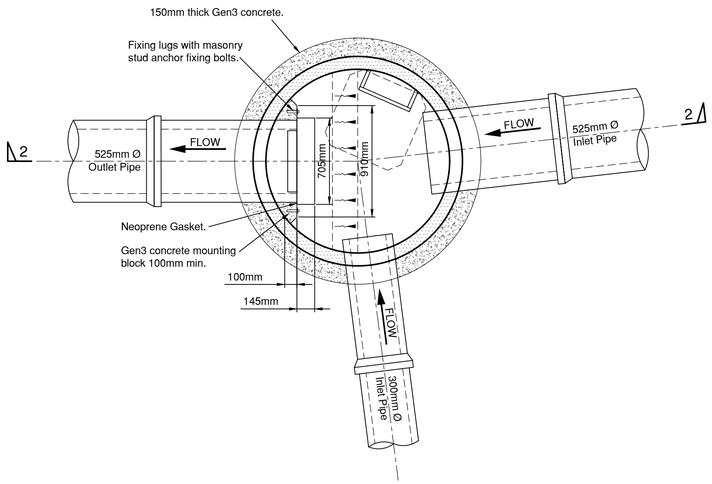

Plan

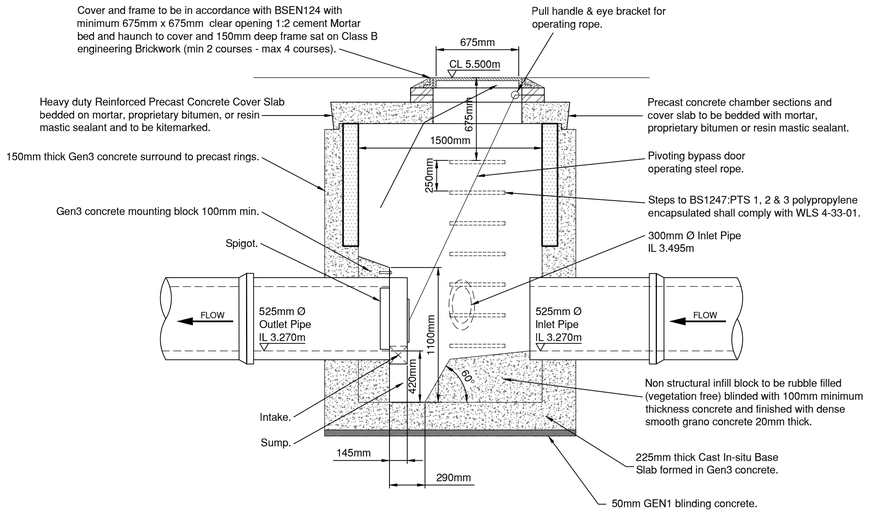

Section 2-2

Control Chamber Detail SW-10

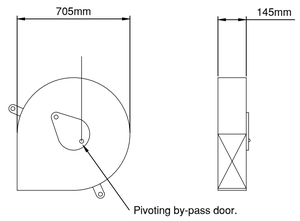

Vortex Flow Control
Flow Rate = 10.0 l/s
Head = 1.500m

SHE-0138-1000-1500-1000 Hydro-Brake Optimum
to be supplied by Hydro International
Tel: 01275 878371

CDM NOTES

1. EXISTING SERVICES. Depth of existing services must be determined prior to works commencing. The contractor is responsible for establishing underground services in accordance with HSE Guidance note HS (G) 47. Any services which would be within the proposed construction layers must be lowered to below the sub-base.

Rev.	Date	Details	By	Chkd	Appd

Client:-

DREW SMITH LIMITED

Site:-
SUMMER LANE
PAGHAM

Drawing Title:-
SuDS FEATURES
CONTROL CHAMBER
CONSTRUCTION DETAILS

Date: March 2020		Scales: Not to Scale at A1	
Drawn: AC	Checked: LD	Approved: TRS	

Drawing No.
DSM/E4761/435

INITIAL TENDER ISSUE
SUBJECT TO PLANNING APPROVAL

RCP ARCHITECTURE & CIVIL ENGINEERING
Rogers Cory Partnership
Architectural and Civil Consultants
The Old School Old School Road
Hook Hampshire RG27 9NJ
T: 01256 769269 E: mail@rcpconsultants.co.uk W: rcpconsultants.co.uk