ARUN DISTRICT COUNCIL:P/27/07/ 12/03/2007

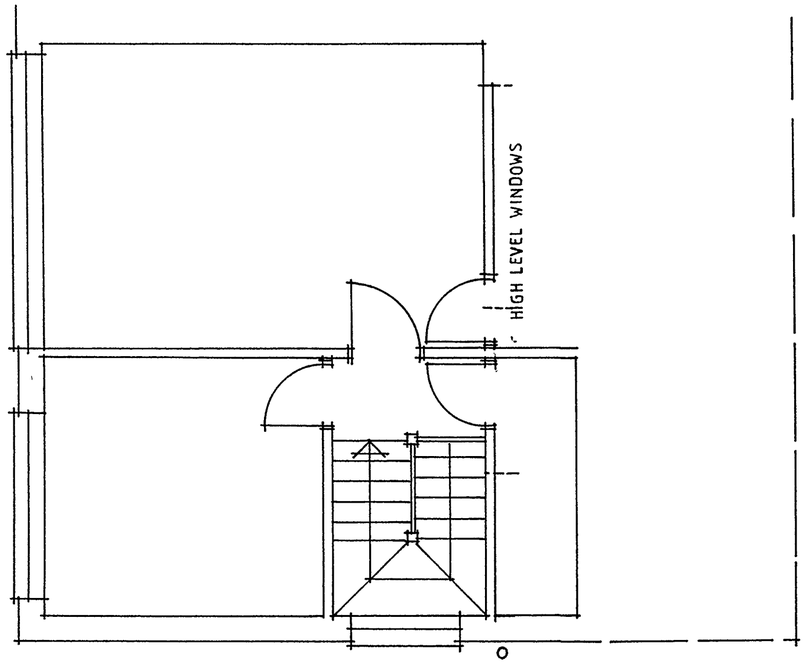

EXISTING FIRST FLOOR PLAN

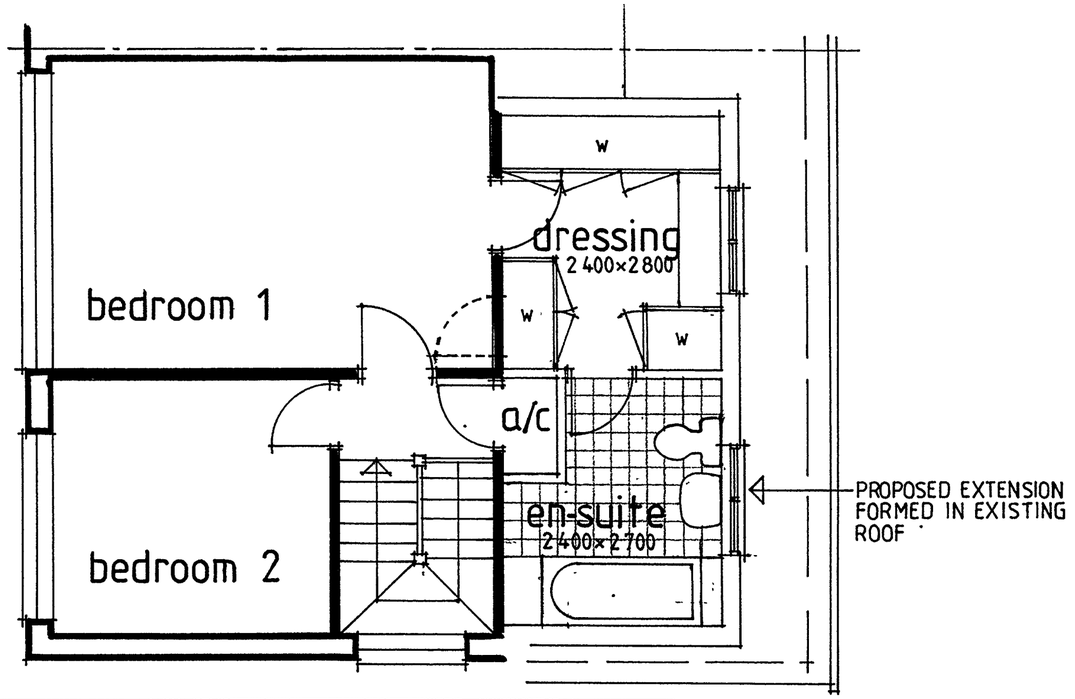

PROPOSED FIRST FLOOR PLAN

1:50

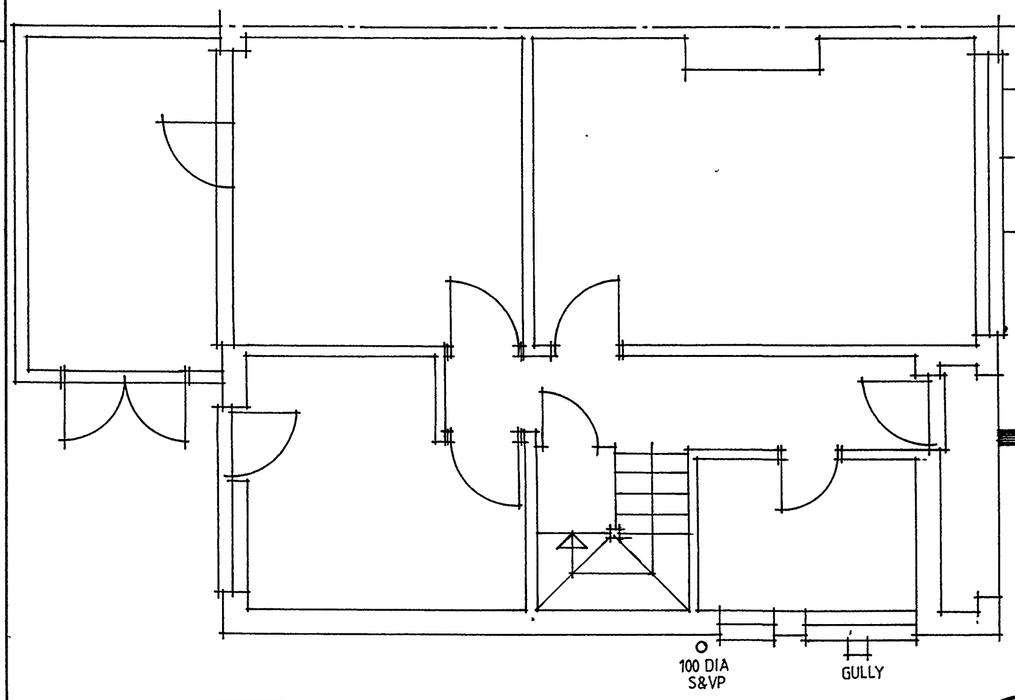

EXISTING GROUND FLOOR PLAN

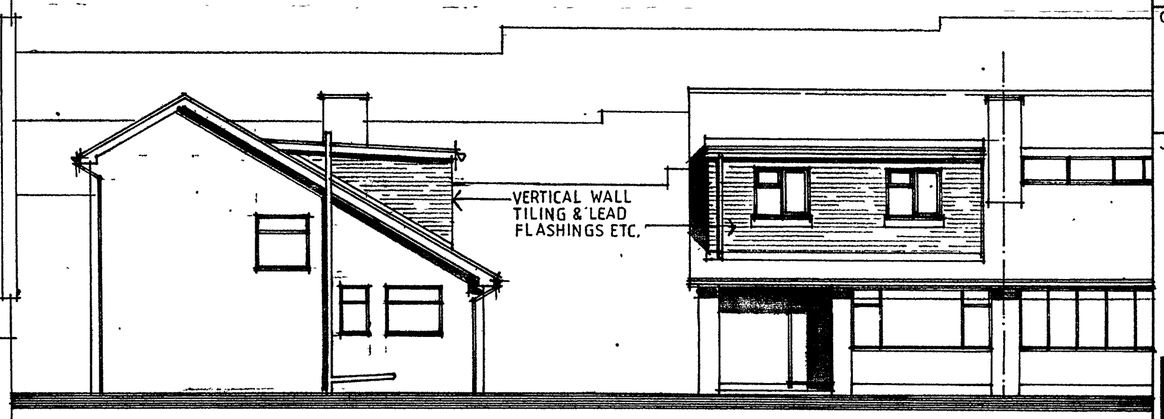

NORTH WEST ELEVATION

1:100

SOUTH WEST ELEVATION

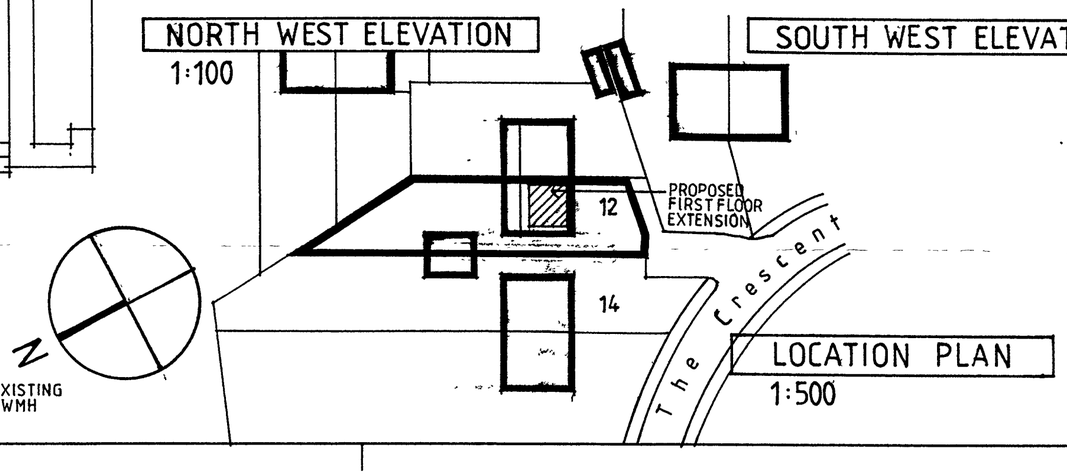

LOCATION PLAN

1:500

Note
All dimensions must be checked on site and not scaled from this drawing

ARUN DISTRICT COUNCIL
No. P/27/07
RECEIVED 12/3/07

A		
	Date	Revision

© copyright

R & K Sartin
Architectural & Interior Design

4, Wheelwrights Close, Arundel, West Sussex, BN18 9TA
Tel: 01903 - 882283

Client

MR & MRS P. BROWN

Job Title

PROPOSED ROOF CONVERSION AT:- 12 THE CRESCENT. PAGHAM. BOGNOR REGIS. WEST SUSSEX. PO21 4RU

Drawing Title

PLANS & ELEVATIONS

Scale
1:500 1:100 1:50

Date MARCH 2007 | Drawn by RAS

Drg. No
2007 / 05 / 01

Rev

Repropoint 2577

ARCHITECTURAL 420 x 594mm A2