Technical Note for Conditions 11 - 15 attached to Application Reference: P/15/24/OUT (appeal reference APP/C3810/W/25/3365661) as amended by P/136/25/NMA

Land South of Summer Lane, Pagham

Client

Northgate Properties Ltd
6 Northgate, Chichester
West Sussex
PO19 1BA
Ref: 13226
Rev A Issue: October 2025

Consulting Engineers
GTA Civils & Transport Ltd
Maple House
192-198 London Rd
Burgess Hill
RH15 9RD

[redacted]

1.0 INTRODUCTION

This statement supports the discharge of **planning conditions 11 to 15** attached to **application reference P/15/24/OUT (appeal reference APP/C3810/W/25/3365661) as amended by P/136/25/NMA**, for the development of land south of Summer Lane, Pagham.

This application relates to the construction of the estate road infrastructure, including associated surface water and foul drainage systems.

The relevant conditions read as follows:

Condition 11 – Surface Water Drainage Strategy

As part of the submission of each Reserved Matters application for the development or any phase thereof hereby permitted, details of a scheme for the disposing of surface water by a means of sustainable drainage system shall be submitted to and approved in writing by the Local Planning Authority in accordance with the approved drainage strategy and discharge rates (2.86 l/s for the 1 in 1 year event and 9.06 l/s for the 1 in 100 plus climate change event) as contained within section 5.3 of the Drainage Strategy (prepared by Ridge, dated June 2024, Rev. P05). The scheme shall be implemented in full in accordance with the approved details prior to first use of the development. The submitted details shall:

1. *Provide information about the design storm period and intensity, the method employed to delay and control the surface water discharge from the site via a proposed Sustainable drainage system which utilises source control features prior to site control features and the measures taken to prevent pollution of the receiving surface waters.*
2. *Demonstrate that the proposed surface water drainage system does not surcharge in the 1 in 1 critical storm duration, flood in the 1 in 30 plus climate change critical storm duration or the 1 in 100 critical storm duration.*
3. *Demonstrate that any flooding that occurs when taking into account climate change for the 1 in 100 critical storm event in accordance with NPPF does not leave the site uncontrolled via overland flow routes, safe, and does not impact any of proposed built development.*
4. *Provide an exceedance plan for any storm event that exceeds the design standards of the surface water drainage SuDS system to ensure no built development is impacted.*

Reason: *To ensure the flood risk is adequately addressed for each new dwelling and not increased in accordance with the NPPF and Arun Local Plan policies W DM2 and W DM3.*

Condition 12 – Construction Drawings and Method Statement

Prior to the commencement of development of each phase for the development hereby permitted, construction drawings of the surface water drainage network, associated sustainable drainage components, flow control mechanisms and a construction method statement have been submitted to and approved in writing by the Local Planning Authority. The scheme shall then be constructed in accordance with the approved drawings, method statement and Micro drainage calculations prior to the first occupation of the development hereby approved. No alteration to the approved drainage scheme shall occur without prior written approval of the Local Planning Authority.

Reason: *To ensure that the proposed development is satisfactorily drained in accordance with policies W SP1, W DM1, W DM2 and W DM3 of the Arun Local Plan. This is required to be a pre-commencement condition because it is necessary to implement the surface water drainage system prior to commencing any building works.*

Condition 13 – Temporary Surface Water Management

No development, including preparatory works, shall commence on any phase until details and method statement of measures indicating how additional surface water run-off from the site within that phase will be avoided during the construction works have been submitted to and approved in writing by the Local Planning Authority.

The applicant may be required to provide collection, balancing and/or settlement systems for these flows. This should include the maintenance proposals during construction. The site works and construction phases shall thereafter be carried out in accordance with approved method statement, and the approved measures and systems shall be brought into operation before any works to create buildings or hard surfaces commence for the relevant phase.

Reason: *To ensure that the proposed development is satisfactorily drained in accordance with policies W SP1, W DM1, W DM2 and W DM3 of the Arun Local Plan. This is required to be a pre-commencement condition because it is necessary to implement the surface water drainage system prior to commencing any building works.*

Condition 14 – Foul Drainage Strategy

Before the development hereby permitted is commenced on any phase, details of the proposed foul drainage system for the phase shall be submitted to and approved in writing by the Local Planning Authority (including details of its siting, design, and subsequent management/maintenance, if appropriate). Occupation of the development shall be phased and implemented to align with the delivery by Southern Water of any sewerage network reinforcement required to ensure that wastewater network capacity is available to adequately drain the development, and no dwelling shall be occupied until works for the disposal of sewage have been fully implemented in accordance with the approved details of any phase or sub-phase.

Reason: *To ensure adequate infrastructure is provided to enable the scheme to be satisfactorily drained and avoids adverse impacts upon the Pagham Harbour SPA/Ramsar in accordance with policies D DM1, W DM1, W SP1, and ENV DM2 of the Arun Local Plan. It is considered necessary for this to be a pre-commencement condition as the foul drainage system goes to the heart of the planning permission.*

Condition 15 – Ditch Crossing Detail

No development authorised by this permission shall commence unless and until full details (including appropriate drawings) of how the new access road will cross the existing ditch on the eastern boundary have been submitted to and approved in writing by the Local Planning Authority. The access road crossing shall be built in accordance with the approved scheme and permanently retained so thereafter.

Reason: *The access road is shown to cross over an existing ditch which is wet at certain times of the year but no details have been submitted as to the form of the crossing. This condition is in accordance with Arun Local Plan policies D DM1 and T SP1 and must be a pre-commencement condition because it is required to access the site.*

2.0 SITE BACKGROUND

The site comprises predominantly greenfield land, historically used for agriculture. It is bounded by residential development to the north and east, with open countryside to the south and west. The topography is generally flat, with a gentle fall from north to south across the site.

A key feature of the site is an existing ditch along the eastern boundary, which is seasonally wet and forms part of the local surface water network. This ditch is proposed to be crossed by the estate road.

This Reserved Matters submission relates specifically to the construction of the estate road infrastructure within the eastern portion of the site, which will serve the future development.

3.0 PROPOSED SITE SURFACE/FOUL WATER DRAINAGE

To facilitate the estate road alignment, the existing ditch along the eastern boundary will be culverted at the crossing point. The culvert will be designed to maintain flow continuity and preserve the hydraulic function of the ditch network.

The proposed surface water drainage strategy has been developed to serve the estate road infrastructure within the eastern portion of the site and is intended for future adoption by the relevant authority. The system has been designed in accordance with national SuDS guidance with consideration given to site constraints and long-term performance.

Surface water runoff from the highway will be collected via kerb gullies and conveyed through a network of pipework and chambers to a proposed attenuation pond located in the north-east corner of the site. The pond provides storage for critical storm events and discharges to the existing ditch network via a hydrobrake flow control.

The greenfield runoff rate for the proposed impermeable areas has been calculated at 0.77 l/s. However, the system has been designed to discharge at 1.0 l/s, which represents the minimum technically achievable rate using a hydrobrake. This approach remains conservative and within the limits set out in the Decision Notice, which permits discharge rates of up to 2.86 l/s for the 1 in 1 year event and 9.06 l/s for the 1 in 100 year plus climate change event.

In addition to the piped network, shallow swales are proposed adjacent to sections of the estate road. These swales receive runoff via flush kerb arrangements, allowing intermittent discharge from the highway into vegetated channels. This approach provides source control and contributes to the SuDS treatment train, which is defined in the CIRIA SuDS Manual (C753) as "a series of drainage components that collectively improve water quality by removing pollutants through filtration, sedimentation, and biological processes." The swales offer initial treatment prior to the water re-entering the piped system downstream.

The drainage system has been tested to ensure:

- No surcharge in the 1 in 1 year critical storm event
- No flooding in the 1 in 30 year plus climate change event
- No flooding in the 1 in 100 year plus 45% climate change event
- No flooding under surcharged outfall conditions, ensuring resilience during downstream restriction scenarios

- The attenuation pond half-drains within 24 hours following the 1 in 30 year storm event, ensuring adequate capacity for subsequent storm events

Foul drainage for the eastern portion of the site will be discharged via gravity to an existing adopted manhole located within the adjacent development site, and all pipework will be laid to self-cleansing gradients. The proposed foul system has been designed in accordance with Building Regulations Part H and Water UK Sewerage Sector Guidance.

Maintenance and management of the drainage system will be undertaken by the developer until formal adoption. A draft maintenance schedule will be provided separately, outlining inspection frequencies, responsibilities, and procedures for each component of the system.

Construction works will be sequenced to ensure safe access, protection of existing watercourses, and compliance with planning conditions.

Key elements of the method include:

- **Site preparation:** Establishment of working areas, protection zones, and temporary drainage measures to manage runoff during construction
- **Swale formation:** Excavation and profiling of shallow swales adjacent to the estate road, with care taken to avoid compaction and ensure vegetation establishment
- **Pond construction:** Excavation of the attenuation pond to design levels, with side slopes graded for safe access and maintenance. The outlet structure and hydrobrake chamber will be installed downstream, with provision for inspection
- **Pipework and chambers:** Installation of the drainage network including kerb gullies, pipe runs, and manholes, with bedding and backfill in accordance with adoptable standards
- **Culvert installation:** Construction of the culvert at the eastern ditch crossing will take place prior to road formation, including headwalls and erosion protection. To maintain uninterrupted flow through the ditch during installation, temporary over-pumping will be implemented using flexible pipework and a mobile pump. This arrangement will divert flows around the construction zone while excavation and placement are underway. Silt control measures such as straw bales or silt fences will be installed downstream to prevent sediment migration. Flow conditions will be monitored throughout the installation period, and temporary over-pumping arrangements will be adapted as necessary in response to rainfall and site conditions.
- **Quality assurance:** All components will be inspected prior to backfilling. As-built records will be prepared for submission to the adopting authority
- **Environmental protection:** Measures will be taken to prevent siltation, protect adjacent watercourses, and manage surface water during construction. Temporary drainage measures such as silt fences, bunds, and straw bales will be used to intercept runoff and prevent water carrying loose soil and debris from entering the ditch network. The attenuation pond and swales will be constructed early in the programme where possible, allowing partial functionality during the works phase.

The contractor will be required to follow best practice for SuDS installation and ensure that all works are completed in accordance with the proposed design and relevant standards.

4.0 MAINTENANCE AND MANAGEMENT STRATEGY

The proposed surface water drainage system has been designed for future adoption by the relevant authority. Until formal adoption, the developer will retain responsibility for inspection, maintenance, and performance monitoring of all SuDS components.

Maintenance activities will be carried out in accordance with national SuDS guidance, including the CIRIA SuDS Manual (C753), and will ensure continued functionality and long-term performance of the drainage system.

Routine maintenance tasks will include:

- Attenuation pond
  - Monthly visual inspections for sediment build-up, vegetation condition, and inlet/outlet blockages
  - Annual desilting if sediment exceeds design thresholds
  - Grass cutting and vegetation management to maintain access and hydraulic performance
- Swales
  - Monthly inspection for erosion, litter, and vegetation health
  - Periodic regrading or reseeding if flow paths are compromised
  - Clearance of debris and sediment from inlet points and flush kerb transitions
- Pipework and chambers
  - Biannual inspection of manholes and pipe runs for blockages or structural defects
  - Jetting and cleaning as required to maintain flow capacity
  - Hydrobrake inspection and maintenance in accordance with manufacturer guidance
- Culvert crossing
  - Quarterly inspection of headwalls, inlet/outlet condition, and erosion protection
  - Clearance of debris and vegetation to maintain flow continuity
  - Monitoring during high-flow events to assess hydraulic performance

All inspections will be logged, and remedial actions recorded. As-built records and maintenance logs will be submitted to the adopting authority as part of the handover process.

The developer will ensure that all components remain accessible, functional, and safe for inspection and maintenance throughout the construction and pre-adoption period. The system has been designed to minimise long-term maintenance burden and ensure resilience under climate change scenarios.

5.0 SUMMARY

This document demonstrates a strategy to manage and protect the drainage system during construction, alongside the mitigation measures required to control surface water quantity and quality throughout the works phase. These provisions ensure that neighbouring properties and the surrounding environment are not adversely affected.

- End of Statement -

APPENDIX A – TOPOGRAPHICAL SURVEY

TREES

A	Ash
AL	Alder
AP	Apple
B	Beech
C	Cedar
CB	Copper Beech
CH	Cherry
CY	Cypress
E	Elm
EL	Elder
EU	Eucalyptus
F	Fir
FM	Field Maple
FR	Fruit
HZ	Hazel
HC	Horse Chestnut
HO	Holm Oak
HW	Hawthorn
HY	Holly
JM	Japanese Maple
LB	Laburnum
LM	Lime
LO	Locust Tree
LR	Laurel
M	Maple
MG	Magnolia
OK	Oak
P	Pine
PA	Palm
PL	Plane
PM	Plum
PO	Poplar
PP	Pissardii Plum
PR	Pear
R	Redwood
RD	Red Oak
RH	Rhododendron
RO	Rowan
SB	Silver Birch
SC	Sweet Chestnut
SP	Scots Pine
SU	Spruce
SY	Sycamore
U	Unidentified
W	Willow
WN	Walnut
Y	Yew

Species / Dia / Spread (max) / Ht
e.g. OK / 0.6 / 8 / 15

ABBREVIATIONS

BT	British Telecom
BOL	Bollard
CB	Control Box
CL	Cover Level
CTV	Cable Television
EL	Electric
EP	Electricity Pole
FH	Fire Hydrant
GSV	Gas Stop Valve
HT	Height
HVC	High Voltage Cable
IC	Inspection Cover
IL	Invert Level
LP	Lamp Post
MH	Man-Hole
MKR	Marker
MW	Monitoring Well
O/H	Overhead
G	Road Gully
PB	Post Box
PC	Pram Crossing
RNP	Road Name Plate
RS	Road Sign
S/A	Soakaway
ST	Stay / Strut
SV	Stop Valve (Unidentified)
TB	Telephone Box
TC	Telecom
TH	Trial Hole
TL	Traffic Light
TP	Telegraph Pole
UTL	Unable to Lift
VP	Vent pipe
WM	Water Meter
WSV	Water Stop Valve

FENCES

BWF	Barbed Wire Fence
CBF	Closed Board Fence
CP	Concrete Post
CPF	Chestnut Paling Fence
CWF	Chicken Wire Fence
IRF	Iron Railing Fence
PKF	Picket Fence
PRF	Post & Rail Fence
PWF	Post & Wire Fence
SCF	Security Fence
SP	Steel Post
WMF	Wire Mesh Fence
WPF	Wood Panel Fence

REVISION A - March 2024
Trees removed as requested by client

NOTES

Drawing derived from 657PG02C

The survey grid has been rellated to OS National Grid using a flat earth projection and metric scale factor of 1, centred on Station P4. Levels are related to OS datum determined from the National GPS Network using OSGM15.

No assumptions should be made regarding the interconnection of manholes. Drainage details huave been obtained from surface inspection and should be verified if of critical importance.

The position and height of adjacent buildings have been obtained using higher level reflectorless measurement and may not take account of single storey extensions or conservatories below the line of sight.

Geomatic Surveyors

siteline

Unit E, Woodside
34 Parham Drive
Eastleigh
SO50 4NU

t: 023 8081 1081
w: siteline.co.uk

NORTHGATE PROPERTIES	Client
LAND ADJACENT TO PAGHAM ROAD PAGHAM, WEST SUSSEX	Contract
SITE SURVEY	Title
657PG02C-EX1 Rev A	Drawing Number
OCTOBER 2021	Date
1:500 (at A0)	Scale
MU/MJR/CC/HB	Surveyor(s)

APPENDIX B – DRAINAGE LAYOUT, OVERLAND FLOW ROUTES AND DRAINAGE DETAILS

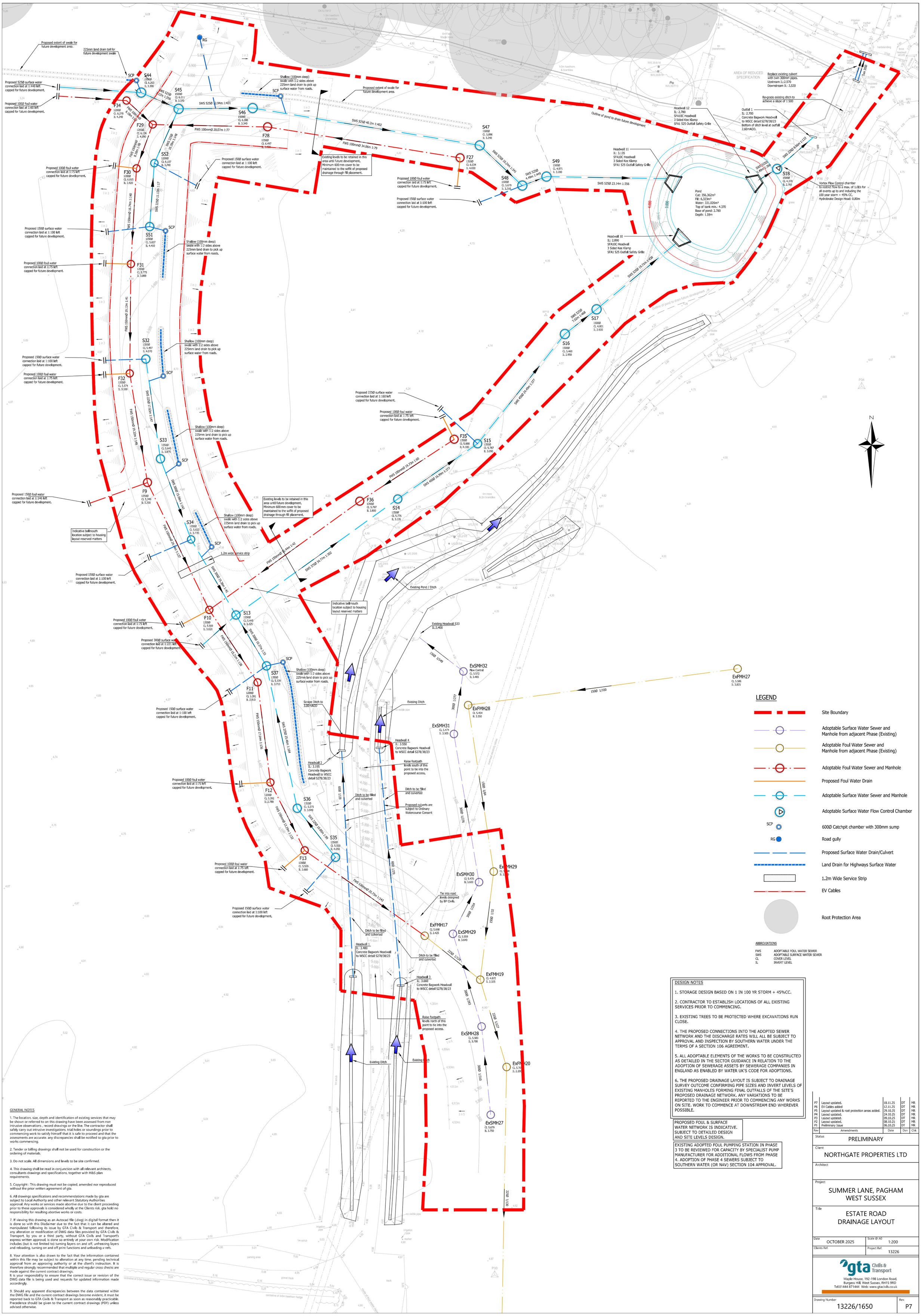

LEGEND

- Site Boundary
- Adoptable Surface Water Sewer and Manhole from adjacent Phase (Existing)
- Adoptable Foul Water Sewer and Manhole from adjacent Phase (Existing)
- Adoptable Foul Water Sewer and Manhole
- Proposed Foul Water Drain
- Adoptable Surface Water Sewer and Manhole
- Adoptable Surface Water Flow Control Chamber
- SCP — 600Ø Catchpit chamber with 300mm sump
- RG — Road gully
- Proposed Surface Water Drain/Culvert
- Land Drain for Highways Surface Water
- 1.2m Wide Service Strip
- EV Cables
- Root Protection Area

ABBREVIATIONS

FWS	ADOPTABLE FOUL WATER SEWER
SWS	ADOPTABLE SURFACE WATER SEWER
CL	COVER LEVEL
IL	INVERT LEVEL

DESIGN NOTES

1. STORAGE DESIGN BASED ON 1 IN 100 YR STORM + 45%CC.

2. CONTRACTOR TO ESTABLISH LOCATIONS OF ALL EXISTING SERVICES PRIOR TO COMMENCING.

3. EXISTING TREES TO BE PROTECTED WHERE EXCAVATIONS RUN CLOSE.

4. THE PROPOSED CONNECTIONS INTO THE ADOPTED SEWER NETWORK AND THE DISCHARGE RATES WILL ALL BE SUBJECT TO APPROVAL AND INSPECTION BY SOUTHERN WATER UNDER THE TERMS OF A SECTION 106 AGREEMENT.

5. ALL ADOPTABLE ELEMENTS OF THE WORKS TO BE CONSTRUCTED AS DETAILED IN THE SECTOR GUIDANCE IN RELATION TO THE ADOPTION OF SEWERAGE ASSETS BY SEWERAGE COMPANIES IN ENGLAND AS ENABLED BY WATER UK'S CODE FOR ADOPTIONS.

6. THE PROPOSED DRAINAGE LAYOUT IS SUBJECT TO DRAINAGE SURVEY OUTCOME CONFIRMING PIPE SIZES AND INVERT LEVELS OF EXISTING MANHOLES FORMING FINAL OUTFALLS OF THE SITE'S PROPOSED DRAINAGE NETWORK. ANY VARIATIONS TO BE REPORTED TO THE ENGINEER PRIOR TO COMMENCING ANY WORKS ON SITE. WORK TO COMMENCE AT DOWNSTREAM END WHEREVER POSSIBLE.

PROPOSED FOUL & SURFACE WATER NETWORK IS INDICATIVE. SUBJECT TO DETAILED DESIGN AND SITE LEVELS DESIGN.

EXISTING ADOPTED FOUL PUMPING STATION IN PHASE 3 TO BE REVIEWED FOR CAPACITY BY SPECIALIST PUMP MANUFACTURER FOR ADDITIONAL FLOWS FROM PHASE 4. ADOPTION OF PHASE 4 SEWERS SUBJECT TO SOUTHERN WATER (OR NAV) SECTION 104 APPROVAL.

GENERAL NOTES

1. The location, size, depth and identification of existing services that may be shown or referred to on this drawing have been assessed from non intrusive observations , record drawings or the like. The contractor shall safely carry out intrusive investigations, trial holes or soundings prior to commencing work to satisfy himself that it is safe to proceed and that the assessments are accurate. any discrepancies shall be notified to gta prior to works commencing.

2. Tender or billing drawings shall not be used for construction or the ordering of materials.

3. Do not scale. All dimensions and levels to be site confirmed.

4. This drawing shall be read in conjunction with all relevant architects, consultants drawings and specifications, together with H&S plan requirements.

5. Copyright : This drawing must not be copied, amended nor reproduced without the prior written agreement of gta.

6. All drawings specifications and recommendations made by gta are subject to Local Authority and other relevant Statutory Authorities approval. Any works or services made abortive due to the client proceeding prior to these approvals is considered wholly at the Clients risk. gta hold no responsibility for resulting abortive works or costs.

7. If viewing this drawing as an Autocad file (.dwg) in digital format then it is done so with this Disclaimer due to the fact that it can be altered and manipulated following its issue by GTA Civils & Transport and therefore, any alteration or modification of DWG data files provided by GTA Civils & Transport, by you or a third party, without GTA Civils and Transport's express written approval, is done so entirely at your own risk. Modification includes (but is not limited to) turning layers on and off, unfreezing layers and reloading, turning on and off print functions and unloading x-refs.

8. Your attention is also drawn to the fact that the information contained within this file may be subject to alteration at any time, pending technical approval from an approving authority or at the client's instruction. It is therefore strongly recommended that multiple and regular cross checks are made against the current contract drawings.
It is your responsibility to ensure that the correct issue or revision of the DWG data file is being used and requests for updated information made accordingly.

9. Should any apparent discrepancies between the data contained within the DWG file and the current contract drawings become evident, it must be reported back to GTA Civils & Transport as soon as reasonably practicable. Precedence should be given to the current contract drawings (PDF) unless advised otherwise.

Rev	Amendments	Date	Drn	Chk
P7	Layout updated.	18.11.25	DT	MR
P6	EV Cables added	12.11.25	DT	MR
P5	Layout updated & root protection areas added.	29.10.25	DT	MR
P4	Layout updated.	24.10.25	DT	MR
P3	Layout updated.	09.10.25	DT	MR
P2	Layout updated.	08.10.25	DT	MR
P1	Preliminary Issue	06.10.25	DT	MR

Status: PRELIMINARY

Client: NORTHGATE PROPERTIES LTD

Architect:

Project: SUMMER LANE, PAGHAM WEST SUSSEX

Title: ESTATE ROAD DRAINAGE LAYOUT

Date: OCTOBER 2025	Scale @ A0: 1:200
Clients Ref.	Project Ref.: 13226

gta Civils & Transport
Maple House, 192-198 London Road, Burgess Hill, West Sussex, RH15 9RD
Tel.01444 871444 Web: www.gtacivils.co.uk

Drawing Number: 13226/1650 Rev. P7

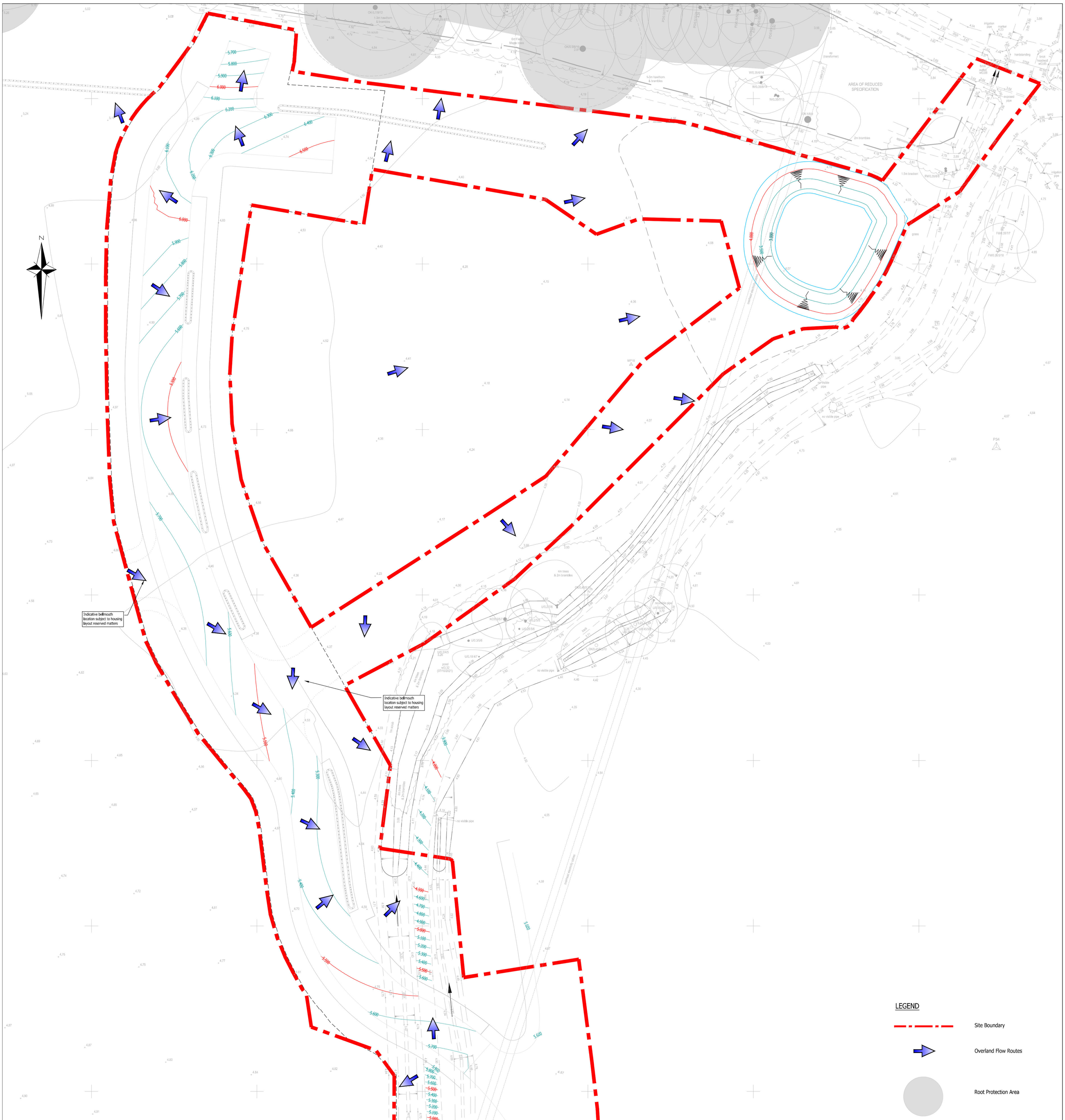

GENERAL NOTES

1. The location, size, depth and identification of existing services that may be shown or referred to on this drawing have been assessed from non intrusive observations , record drawings or the like. The contractor shall safely carry out intrusive investigations, trial holes or soundings prior to commencing work to satisfy himself that it is safe to proceed and that the assessments are accurate. any discrepancies shall be notified to gta prior to works commencing.

2. Tender or billing drawings shall not be used for construction or the ordering of materials.

3. Do not scale. All dimensions and levels to be site confirmed.

4. This drawing shall be read in conjunction with all relevant architects, consultants drawings and specifications, together with H&S plan requirements.

5. Copyright : This drawing must not be copied, amended nor reproduced without the prior written agreement of gta.

6. All drawings specifications and recommendations made by gta are subject to Local Authority and other relevant Statutory Authorities approval. Any works or services made abortive due to the client proceeding prior to these approvals is considered wholly at the Clients risk. gta hold no responsibility for resulting abortive works or costs.

7. If viewing this drawing as an Autocad file (.dwg) in digital format then it is done so with this Disclaimer due to the fact that it can be altered and manipulated following its issue by GTA Civils & Transport and therefore, any alteration or modification of DWG data files provided by GTA Civils & Transport, by you or a third party, without GTA Civils and Transport's express written approval, is done so entirely at your own risk. Modification includes (but is not limited to) turning layers on and off, unfreezing layers and reloading, turning on and off print functions and unloading x-refs.

8. Your attention is also drawn to the fact that the information contained within this file may be subject to alteration at any time, pending technical approval from an approving authority or at the client's instruction. It is therefore strongly recommended that multiple and regular cross checks are made against the current contract drawings.
It is your responsibility to ensure that the correct issue or revision of the DWG data file is being used and requests for updated information made accordingly.

9. Should any apparent discrepancies between the data contained within the DWG file and the current contract drawings become evident, it must be reported back to GTA Civils & Transport as soon as reasonably practicable. Precedence should be given to the current contract drawings (PDF) unless advised otherwise.

Rev	Amendments	Date	Dsn	Chk
P6	Layout updated.	18.11.25	DT	MR
P5	Layout updated & root protection areas added.	29.10.25	DT	MR
P4	Layout updated.	24.10.25	DT	MR
P3	Layout updated.	09.10.25	DT	MR
P2	Layout updated.	08.10.25	DT	MR
P1	Preliminary Issue	06.10.25	DT	MR

Status
PRELIMINARY

Client
NORTHGATE PROPERTIES LTD

Architect

Project
SUMMER LANE, PAGHAM
WEST SUSSEX

Title
ESTATE ROAD
OVERLAND FLOW ROUTES

Date: OCTOBER 2025
Scale @ A0: 1:200
Clients Ref.
Project Ref.: 13226

gta Civils & Transport
Maple House, 192-198 London Road,
Burgess Hill, West Sussex, RH15 9RD
Tel.01444 871444 Web: www.gtacivils.co.uk

Drawing Number: 13226/1655
Rev.: P6

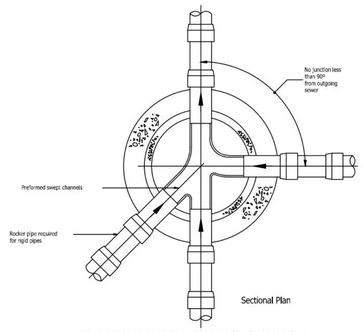

Rigid pipes built into manhole should have a flexible joint as close as feasible to the external face of the structure and the length of the next rocker pipe should be as shown.

Nominal diameter (mm)	Maximum effective length (m)
150 - 600	0.6
601 - 750	1.00
over 750	1.25

All pipes entering the bottom of the manhole to have soffits level.

TYPICAL ARRANGEMENT OF PIPE JUNCTIONS WITHIN MANHOLES (NTS)

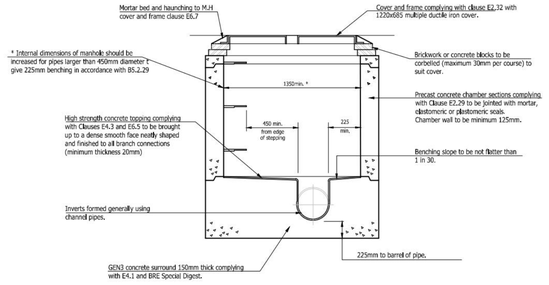

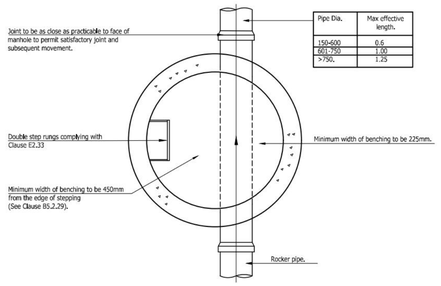

Pipe Dia.	Max effective length.
150-600	0.6
601-750	1.00
>750.	1.25

TYPICAL MANHOLE DETAIL - TYPE C
Depth from cover level to soffit less than 1.5m

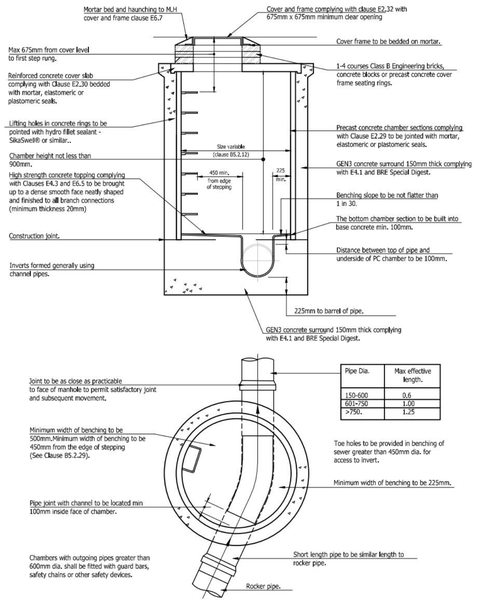

Pipe Dia.	Max effective length.
150-600	0.6
601-750	1.00
>750.	1.25

TYPICAL MANHOLE DETAIL - TYPE B
Depth from cover level to soffit of pipe 1.5m to 3m

GENERAL NOTES

1. The location, size, depth and identification of existing services that may be shown or referred to on this drawing have been assessed from non intrusive observations , record drawings or the like. The contractor shall safely carry out intrusive investigations, trial holes or soundings prior to commencing work to satisfy himself that it is safe to proceed and that the assessments are accurate. any discrepancies shall be notified to gta prior to works commencing.

2. Tender or billing drawings shall not be used for construction or the ordering of materials.

3. Do not scale. All dimensions and levels to be site confirmed.

4. This drawing shall be read in conjunction with all relevant architects, consultants drawings and specifications, together with H&S plan requirements.

5. Copyright : This drawing must not be copied, amended nor reproduced without the prior written agreement of gta.

6. All drawings specifications and recommendations made by gta are subject to Local Authority and other relevant Statutory Authorities approval. Any works or services made abortive due to the client proceeding prior to these approvals is considered wholly at the Clients risk. gta hold no responsibility for resulting abortive works or costs.

7. If viewing this drawing as an Autocad file (.dwg) in digital format then it is done so with this Disclaimer due to the fact that it can be altered and manipulated following its issue by GTA Civils & Transport and therefore, any alteration or modification of DWG data files provided by GTA Civils & Transport, by you or a third party, without GTA Civils and Transport's express written approval, is done so entirely at your own risk. Modification includes (but is not limited to) turning layers on and off, unfreezing layers and reloading, turning on and off print functions and unloading x-refs.

8. Your attention is also drawn to the fact that the information contained within this file may be subject to alteration at any time, pending technical approval from an approving authority or at the client's instruction. It is therefore strongly recommended that multiple and regular cross checks are made against the current contract drawings.
It is your responsibility to ensure that the correct issue or revision of the DWG data file is being used and requests for updated information made accordingly.

9. Should any apparent discrepancies between the data contained within the DWG file and the current contract drawings become evident, it must be reported back to GTA Civils & Transport as soon as reasonably practicable. Precedence should be given to the current contract drawings (PDF) unless advised otherwise.

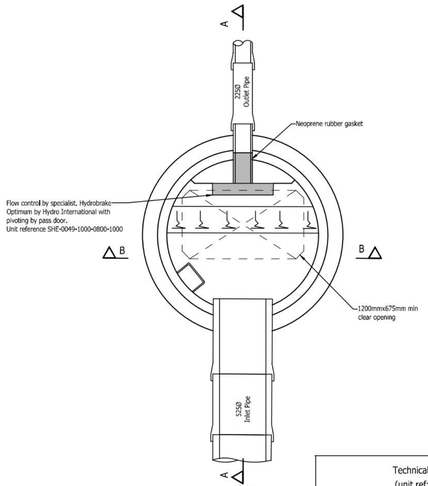

Plan

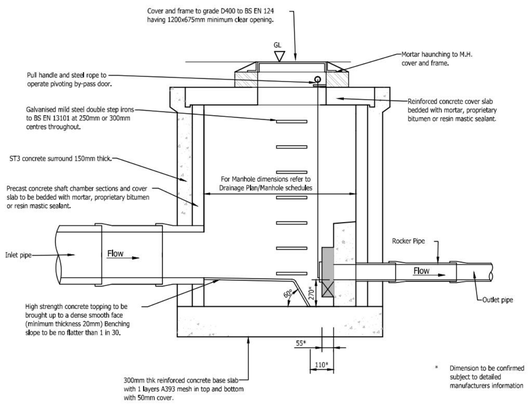

Section A-A

Flow Control Chamber
Typical Detail

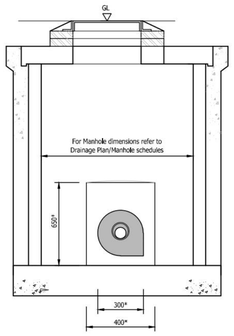

Section B-B

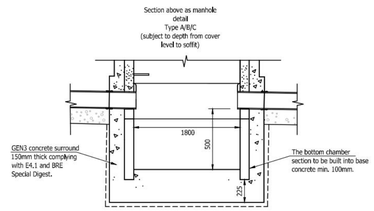

CATCHPIT DETAIL

NO WORKS TO COMMENCE UNTIL SECTION 104 AGREEMENT IS SIGNED BY ALL PARTIES.

ALL ADOPTABLE ELEMENTS OF THE WORKS TO BE CONSTRUCTED AS DETAILED IN THE SECTOR GUIDANCE IN RELATION TO THE ADOPTION OF SEWERAGE ASSETS BY SEWERAGE COMPANIES IN ENGLAND AS ENABLED BY WATER UK'S CODE FOR ADOPTIONS.

Pipe Bedding & Sidefill Materials.

Type A bedding material shall be aggregates comforming to B.S 882, or BS EN 12620, nominal single-size or graded complying with the recommendations of WIs No. 4-08-01 as follows :-

TABLE 1 :

Pipe dia. (minimum)	Single-size.	Graded.
Over 100 to 150	10mm nominal single-size.	
Over 150 to 500	10 or 14mm nominal single-sized.	14mm to 5mm graded
Over 500	10,14 or 20mm nominal single-sized.	14 or 5mm graded or 20mm to 5mm graded.

Type B material shall be selected excavated or imported material consisting of uniform, readily compactible material, free from vegetable matter, building rubbish and frozen material, or materials susceptible to spontaneous combustion, and excluding clay of liquid limit greater than 80 and/or plastic limit greater than 55 and materials of excessive high moisture content. Clay lumps and stones retained on 75mm and 37.5mm sieves respectively shall be excluded from the fill material.

Pipes Laid with a Concrete Bedding

Class A concrete surround to be minimum cube strength at 28 days of 20N/mm² for non-aggressive soils. For aggressive soil conditions the concrete mix shall be in accordance with the requirements of BRE Digest 250, or BRE paper CP23/77 as appropriate.
The backfill, other than the first 150mm of cover, should not be placed before the compressive strength of the site concrete has reached 14N/mm². The concrete mix should be so designed that this is reached without unnecessary delay.

Compressible Filler and Packing for Pipelines.

Compressible filler for interrupting concrete protection to pipelines shall consist of bitumen impregnated insulating board to B.S 1142, or other equally compressible material. The thickness of compressible filler shall be as follows :-

Nominal diameter of pipe (mm)	Thickness of Compressible filler (mm)
Less than 450	18
450 - 1200	36
Exceeding 1200	54

Compressible packing for use between pipes and precast concrete setting blocks shall consist of bitumen damp-proof sheeting complying with B.S 743.

Technical Specification of Flow Control
(unit ref: SHE-0049-1000-0800-1000)

Control Point	Head (m)	Flow (l/s)
Primary Design	0.800	1.000
Flush-Flo	0.216	0.931
Kick-Flo	0.438	0.768
Mean Flow		0.843

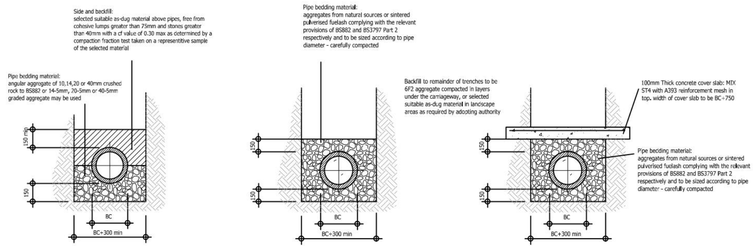

CLASS B BEDDING
For use where cover to crown of pipe is greater than 900mm under verges, footways & cycleways

CLASS S BEDDING
For use where cover to crown of pipe is greater than 1200mm under carriageways

CLASS Z BEDDING
For use where cover to crown of pipe is less than 1200mm under carriageways, or less than 900mm under other areas

PIPE BEDDING DETAILS

Rev	Amendments	Date	Dsn	Chk
P1	INITIAL ISSUE	03.10.25	DT	MR

Status

Client
NORTHGATE PROPERTIES LTD

Architect

Project
SUMMER LANE, PAGHAM
WEST SUSSEX

Title
ESTATE ROAD
MAIN DRAINAGE DETAILS
SHEET 1

Date	Scale @ A1
OCTOBER 2025	NTS
Clients Ref.	Project Ref. 13226

gta Civils & Transport
Maple House, 192-198 London Road,
Burgess Hill, West Sussex, RH15 9RD
Tel.01444 871444 Web: www.gtacivils.co.uk

Drawing Number	Rev.
13226/1551	P1

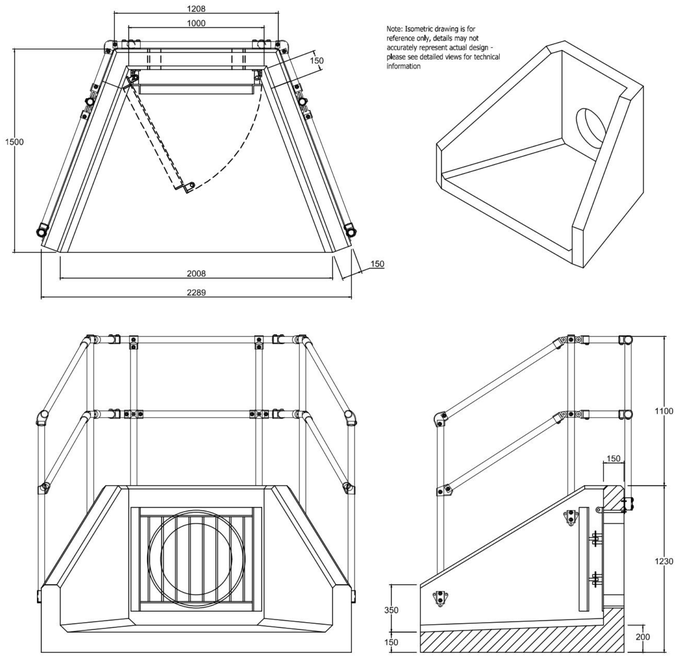

Note: Isometric drawing is for reference only, details may not accurately represent actual design - please see detailed views for technical information

SFA10C HEADWALL
SFA1 525 OUFTALL SAFETY GRILLE
3 SIDED KEE KLAMP

NOTES:

- All dimensions in mm
- All measurements ± 1mm

Specification Information
- Opening in back wall cast to suit outside diameter of the pipework
- Invert level of pipe can be set to your specification

Headwall Installation
Units should be bedded on minimum 200mm thick well compacted Class 6A* selected well graded granular material.
*Manual of contract documents for Highway Works: Volume (MCHW1) specification for Highway Works, Series 600 (Nov.09).
Sit the headwall level or with a slight fall 1:50 from pipe to spill mouth.

Handling
A. Weight of concrete is based on 2.4 tonne/m³+5% is recommended for sizing lifting equipment.
B. All lifting points shall be used as specified below
C. Unit to be lifted as per lifting diagram

Concrete
A. Mix ref: Self-compacting DC4/DS4 Mix
B. Lifting strength based on 2 cubes = 20N/mm²
C. Characteristic 28 day cube strength = 50N/mm²
D. Concrete provides Design Chemical Class 4 (DC4) to special Digest 1, Table F2.

Reinforcement
A. Reinforcement to BS EN 13369
B. Scheduling, dimensioning, bending & cutting to BS8666
C. Cage to be machine tied with steel wire

Manufacture
A. Manufacture to BS EN 15258:2008 precast concrete products - Retaining wall elements, Factory Production Control certificate number: 0086-CPR-650448 & BS EN 13369
B. Tolerances to BS EN 13369 clause 4.3.1.1
C. Finishing:

	Top	Sides	Base	Rear of back wall
Class	A	A	A	Soff - Levelled

D. Marking: Units shall be indelibly marked to show:
- Mould reference code
- De-mould date
- Job reference number & unique product number
- Unit weight (kg)

Design
A. Concrete design to EC2
B. Althon have designed the concrete units only, the site conditions should be assessed for suitability by the scheme designer
C. Units are designed to withstand a vertical live load surcharge of 10kN/M²
D. Weight of soil = 18kN/M³
E. Angle of internal friction = 30 Deg.
F. Design Life: >100 years

Min Cover	Cover Block Size (mm)	Min Cover Size (mm)	Max Cover Size (mm)
All Faces	55	50	60

Exposure Classification	Exposure induced by Carbonation	Corrosion induced by Chloride	Freeze/thaw attack	Chemical attack
All Faces	XC3/4	XD3	XF4	XA3

Fabrication Specification:
A. Manufacture IAW EN 1090-2 EXC CLASS 1
B. Material grade is to be: BS EN 10025 S275
C. Welding carried out IAW EN 1090-2 PARA 7.5.4 - 7.5.18
D. All fillet and butt welds to have a minimum throat thickness of 6mm & joints to be fully welded where possible.
E. Ensure vertical flats are fully welded both sides where possible.
F. All sharp edges and burrs are to be removed.
G. Remove all weld splatter.
H. Holes by punching are permitted with reaming.
I. Galvanising is carried out after fabrication to BS EN:ISO 1461

Handrail Specification
A. Kee Klamp® Galvanised Size 8 Fittings
B. Size 8 48.3mm OD 3.2mm Wall Thickness Galvanised Medium Duty Tube to BS EN 10255
C. 360N/m Design Load at stated in BS 8118, BS 6180, BS 6399 & BS 7818, Civil Engineering Specification for the Water Industry (CESWI) 7th Edition Clause 2.60 Handrails & Balusters & The Engineering Equipment and Materials Users' Association (EEMUA) Publication 105 7th Edition Factory Stairways, Ladders and Handrails
D. Other design loads available on request
E. GRP/FRP Handrails also available

Reference	Specification (Althon)	Invert Level (mAOD)
Headwall 1	Concrete Bagwork Headwall to WSCC detail S278/38/23	3.480
Headwall 2	Concrete Bagwork Headwall to WSCC detail S278/38/23	3.195
Headwall 3	Concrete Bagwork Headwall to WSCC detail S278/38/23	3.660
Headwall 4	Concrete Bagwork Headwall to WSCC detail S278/38/23	3.550
Headwall 10	Precast Concrete Splayed Headwall SFA10C with Cranked Grating (3 Sided Kee Klamp)	2.890
Headwall 11	Precast Concrete Splayed Headwall SFA10C with Cranked Grating (3 Sided Kee Klamp)	3.135
Headwall 12	Precast Concrete Splayed Headwall SFA10C with Cranked Grating (3 Sided Kee Klamp)	2.765

GENERAL NOTES

1. The location, size, depth and identification of existing services that may be shown or referred to on this drawing have been assessed from non intrusive observations , record drawings or the like. The contractor shall safely carry out intrusive investigations, trial holes or soundings prior to commencing work to satisfy himself that it is safe to proceed and that the assessments are accurate. any discrepancies shall be notified to gta prior to works commencing.

2. Tender or billing drawings shall not be used for construction or the ordering of materials.

3. Do not scale. All dimensions and levels to be site confirmed.

4. This drawing shall be read in conjunction with all relevant architects, consultants drawings and specifications, together with H&S plan requirements.

5. Copyright : This drawing must not be copied, amended nor reproduced without the prior written agreement of gta.

6. All drawings specifications and recommendations made by gta are subject to Local Authority and other relevant Statutory Authorities approval. Any works or services made abortive due to the client proceeding prior to these approvals is considered wholly at the Clients risk. gta hold no responsibility for resulting abortive works or costs.

7. If viewing this drawing as an Autocad file (.dwg) in digital format then it is done so with this Disclaimer due to the fact that it can be altered and manipulated following its issue by GTA Civils & Transport and therefore, any alteration or modification of DWG data files provided by GTA Civils & Transport, by you or a third party, without GTA Civils and Transport's express written approval, is done so entirely at your own risk. Modification includes (but is not limited to) turning layers on and off, unfreezing layers and reloading, turning on and off print functions and unloading x-refs.

8. Your attention is also drawn to the fact that the information contained within this file may be subject to alteration at any time, pending technical approval from an approving authority or at the client's instruction. It is therefore strongly recommended that multiple and regular cross checks are made against the current contract drawings.
It is your responsibility to ensure that the correct issue or revision of the DWG data file is being used and requests for updated information made accordingly.

9. Should any apparent discrepancies between the data contained within the DWG file and the current contract drawings become evident, it must be reported back to GTA Civils & Transport as soon as reasonably practicable. Precedence should be given to the current contract drawings (PDF) unless advised otherwise.

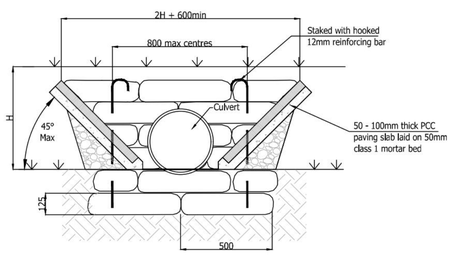

ELEVATION OF HEADWALL
OUTFALL TO END OF DITCH

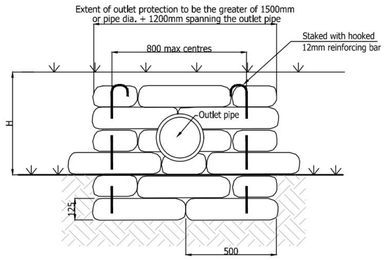

ELEVATION OF HEADWALL
OUTFALL TO POND/SIDE OF DITCH

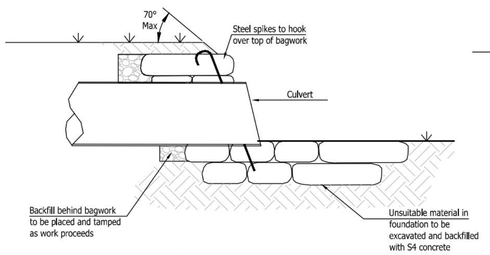

HEADWALL SECTION
OUTFALL TO END OF DITCH

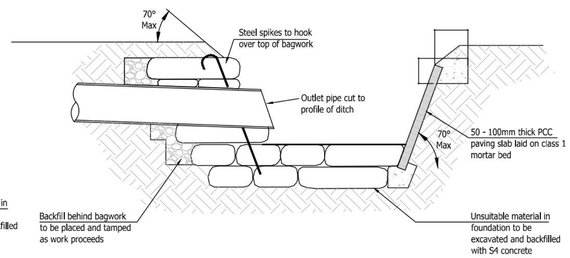

HEADWALL SECTION
OUTFALL TO SIDE OF DITCH

- Bags shall be of Hessian or Canvas and shall be of a size to provide a wall thickness of 500mm.
- Concrete bagwork shall be to Clause 519 and be three quarter filled with 25mm slump ST4 concrete immediately prior to placing with the ends sewn.
- The bags shall be placed in a modified Flemish bond so as to 'break joint' with the mouths away from the surface and be tamped into position to form a rectangular block.
- Extent of outlet protection to be the greater of 1500mm or pipe diameter + 1200mm spanning the outlet pipe.
- Headwall design may need to be adjusted to on site conditions following approval from ESCC Inspector.
- For vehicular crossings of ditches pipes shall be min 450mm diameter and be set to invert of ditch. Ditch to be regraded to achieve satisfactory falls.
- For H>600 appropriate vehicular or pedestrian containment shall be installed.
- The nearest edge of any carriageway shall be set back at least H from the base of the ditch
- All exposed pipework to be certified UV stable.

Rev	Amendments	Date	Dsn	Chk
P1	INITIAL ISSUE	03.10.25	DT	MR

Status

Client
NORTHGATE PROPERTIES LTD

Architect

Project
SUMMER LANE, PAGHAM
WEST SUSSEX

Title
ESTATE ROAD
MAIN DRAINAGE DETAILS
SHEET 2

Date: OCTOBER 2025
Scale @ A1: NTS
Clients Ref.
Project Ref.: 13226

gta Civils & Transport
Maple House, 192-198 London Road,
Burgess Hill, West Sussex, RH15 9RD
Tel.01444 871444 Web: www.gtacivils.co.uk

Drawing Number: 13226/1552
Rev.: P1

APPENDIX C – GREENFIELD RUNOFF RATE CALCULATION & SURFACE WATER DRAINAGE NETWORK SIMULATIONS

Greenfield runoff rate estimation tool

hr wallingford www.uksuds.com | Greenfield runoff rate estimation tool (https://www.uksuds.com/)

This is an estimation of the greenfield runoff rates that are used to meet normal best practice criteria in line with Environment Agency guidance "Rainfall runoff management for developments", SC030219 (2013), the SuDS Manual C753 (CIRIA, 2015) and the non-statutory standards for SuDS (Defra, 2015). This information on greenfield runoff rates may be the basis for setting consents for the drainage of surface water runoff from sites.

Project details

Date	02/10/2025
Calculated by	DT
Reference	13226
Model version	2.1.2

Location

Site name	Land South of Summer Lane, Pagham
Site location	

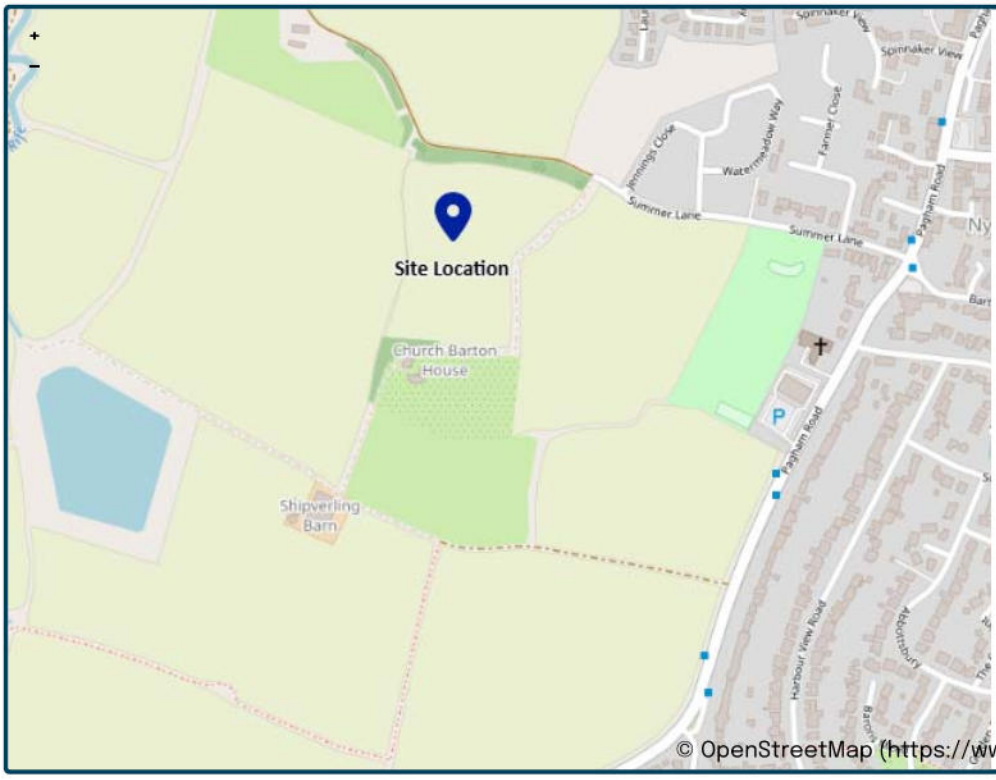

Site easting (British National Grid)	488600
Site northing (British National Grid)	98394

Site details

Total site area (ha)	0.27	ha

Greenfield runoff

Method

Method	IH124

IH124

	My value		Map value	
SAAR (mm)	693	mm		693
How should SPR be derived?	WRAP soil type			
WRAP soil type	3			3
SPR	0.37			
QBar (IH124) (l/s)	0.77	l/s		

Growth curve factors

	My value	Map value
Hydrological region	7	7
1 year growth factor	0.85	
2 year growth factor	0.88	
10 year growth factor	1.62	
30 year growth factor	2.3	
100 year growth factor	3.19	
200 year growth factor	3.74	

Results

Method	IH124	
Flow rate 1 year (l/s)	0.7	l/s
Flow rate 2 year (l/s)	0.7	l/s
Flow rate 10 years (l/s)	1.2	l/s
Flow rate 30 years (l/s)	1.8	l/s
Flow rate 100 years (l/s)	2.4	l/s
Flow rate 200 years (l/s)	2.9	l/s

Please note runoff estimation is subject to significant uncertainty. Results are therefore normally reported to only 1 decimal place. Where 2 decimal places are provided, this does not indicate accuracy to this level, it has been adopted to prevent 'zero' figures from being reported. Outputs less than 0.01 l/s are reported as 0.01 l/s.

Disclaimer

This report was produced using the Greenfield runoff rate estimation tool (2.1.2) developed by HR Wallingford and available at uksuds.com (https://www.uksuds.com/). The use of this tool is subject to the UK SuDS terms and conditions and licence agreement, which can both be found at uksuds.com/terms-conditions (https://www.uksuds.com/terms-conditions). The outputs from this tool have been used to estimate Greenfield runoff rates. The use of these results is the responsibility of the users of this tool. No liability will be accepted by HR Wallingford, the Environment Agency, Centre for Ecology and Hydrology, Wallingford Hydrosolutions or any other organisation for the use of these data in the design or operational characteristics of any drainage scheme.

Design Settings

Rainfall Methodology	FEH-22	Maximum Time of Concentration (mins)	30.00	Preferred Cover Depth (m)	1.200
Return Period (years)	2	Maximum Rainfall (mm/hr)	50.0	Include Intermediate Ground	✓
Additional Flow (%)	0	Minimum Velocity (m/s)	1.00	Enforce best practice design rules	x
CV	1.000	Connection Type	Level Soffits		
Time of Entry (mins)	5.00	Minimum Backdrop Height (m)	0.200		

Nodes

Name	Area (ha)	T of E (mins)	Cover Level (m)	Diameter (mm)	Easting (m)	Northing (m)	Depth (m)
S32	0.040	5.00	5.497	1350	488636.659	98452.130	1.427
S33	0.035	5.00	5.645	1350	488639.211	98434.695	1.770
S34	0.025	5.00	5.633	1200	488644.558	98420.624	1.863
S35	0.024	5.00	5.500	1350	488669.789	98365.051	1.450
S36	0.019	5.00	5.375	1350	488663.111	98373.619	1.435
S37	0.019	5.00	5.339	1350	488657.748	98398.498	1.629
S12		5.00	5.115	1200	488645.830	98401.476	1.675
S13	0.013	5.00	5.445	1350	488652.410	98407.392	2.120
S14			5.776	1350	488680.660	98427.671	2.641
S15			5.787	1350	488694.620	98437.347	2.697
S16			5.460	1500	488709.861	98456.505	2.510
S17			4.801	1500	488715.397	98460.815	1.866
Headwall 10			4.370		488730.552	98473.410	1.480
S43	0.006	5.00	5.230	1500	488600.705	98501.038	1.760
S44			6.263	1500	488635.842	98498.701	2.873
S51	0.020	5.00	5.837	1350	488637.327	98475.267	1.427
S52	0.023	5.00	6.107	1200	488638.141	98486.380	2.367
S45			6.211	1500	488642.377	98495.869	2.841
S46			6.380	1500	488655.313	98496.000	3.040
S47			5.896	1500	488694.984	98489.479	2.656
S48			5.679	1500	488702.427	98482.443	2.469
S49			4.871	1500	488706.634	98484.018	1.671
Headwall 11			4.370		488729.774	98483.619	1.235
Headwall 12	0.044	5.00	4.370	1	488742.236	98482.533	1.590
S18			4.376	1500	488746.944	98485.350	1.611
Outfall 1			3.530		488753.451	98491.064	0.830

Links

Name	US Node	DS Node	Length (m)	ks (mm) / n	US IL (m)	DS IL (m)	Fall (m)	Slope (1:X)	Dia (mm)	T of C (mins)	Rain (mm/hr)
1.000	S32	S33	17.620	0.600	4.070	3.950	0.120	146.8	225	5.27	50.0
1.001	S33	S34	15.053	0.600	3.875	3.770	0.105	143.4	300	5.46	50.0
1.002	S34	S13	15.386	0.600	3.770	3.400	0.370	41.6	300	5.57	50.0
2.000	S35	S36	10.863	0.600	4.050	3.940	0.110	98.8	225	5.14	50.0
2.001	S36	S37	25.450	0.600	3.940	3.785	0.155	164.2	225	5.55	50.0
2.002	S37	S13	10.373	0.600	3.710	3.400	0.310	33.5	300	5.62	50.0
3.000	S12	S13	8.849	0.600	3.440	3.400	0.040	221.2	300	5.14	50.0
1.003	S13	S14	34.776	0.600	3.325	3.210	0.115	302.4	375	6.18	50.0
1.004	S14	S15	16.985	0.600	3.135	3.090	0.045	377.4	450	6.45	50.0
1.005	S15	S16	24.481	0.600	3.090	3.025	0.065	376.6	450	6.84	50.0
1.006	S16	S17	7.016	0.600	2.950	2.935	0.015	467.7	525	6.95	50.0
1.007	S17	Headwall 10	19.705	0.600	2.935	2.890	0.045	437.9	525	7.26	49.2
1.008	Headwall 10	Headwall 12	14.824	0.600	2.890	2.780	0.110	134.8	525	7.39	48.7
4.000	S43	S44	35.215	0.600	3.470	3.390	0.080	440.2	525	5.55	50.0
4.001	S44	S45	7.123	0.600	3.390	3.370	0.020	356.2	525	5.65	50.0
5.000	S51	S52	11.142	0.600	4.410	3.740	0.670	16.6	225	5.06	50.0
5.001	S52	S45	10.392	0.600	3.740	3.670	0.070	148.5	225	5.22	50.0
4.002	S45	S46	12.936	0.600	3.370	3.340	0.030	431.2	525	5.85	50.0
4.003	S46	S47	40.204	0.600	3.340	3.240	0.100	402.0	525	6.46	50.0

Name	Vel (m/s)	Cap (l/s)	Flow (l/s)	US Depth (m)	DS Depth (m)	Σ Area (ha)	Σ Add Inflow (l/s)	Pro Depth (mm)	Pro Velocity (m/s)
1.000	1.077	42.8	7.2	1.202	1.470	0.040	0.0	62	0.802
1.001	1.311	92.7	13.5	1.470	1.563	0.075	0.0	77	0.943
1.002	2.445	172.8	18.1	1.563	1.745	0.100	0.0	65	1.597
2.000	1.315	52.3	4.4	1.225	1.210	0.024	0.0	44	0.801
2.001	1.017	40.5	7.9	1.210	1.329	0.043	0.0	67	0.793
2.002	2.727	192.7	11.3	1.329	1.745	0.062	0.0	49	1.512
3.000	1.053	74.4	0.0	1.375	1.745	0.000	0.0	0	0.000
1.003	1.036	114.5	31.8	1.745	2.191	0.176	0.0	134	0.890
1.004	1.040	165.4	31.8	2.191	2.247	0.176	0.0	133	0.810
1.005	1.041	165.6	31.8	2.247	1.985	0.176	0.0	133	0.811
1.006	1.029	222.7	31.8	1.985	1.341	0.176	0.0	133	0.738
1.007	1.064	230.3	31.2	1.341	0.955	0.176	0.0	129	0.752
1.008	1.927	417.2	31.0	0.955	1.065	0.176	0.0	96	1.149
4.000	1.061	229.7	1.2	1.235	2.348	0.006	0.0	27	0.283
4.001	1.181	255.6	1.2	2.348	2.316	0.006	0.0	25	0.303
5.000	3.224	128.2	3.6	1.202	2.142	0.020	0.0	26	1.434
5.001	1.071	42.6	7.8	2.142	2.316	0.043	0.0	65	0.816
4.002	1.072	232.1	8.9	2.316	2.515	0.049	0.0	69	0.526
4.003	1.111	240.4	8.9	2.515	2.131	0.049	0.0	68	0.540

Flow+ v11.0 Copyright © 1988-2025 Causeway Technologies Ltd

Links

Name	US Node	DS Node	Length (m)	ks (mm) / n	US IL (m)	DS IL (m)	Fall (m)	Slope (1:X)	Dia (mm)	T of C (mins)	Rain (mm/hr)
4.004	S47	S48	10.242	0.600	3.240	3.210	0.030	341.4	525	6.60	50.0
4.005	S48	S49	4.492	0.600	3.210	3.200	0.010	449.2	525	6.67	50.0
4.006	S49	Headwall 11	23.143	0.600	3.200	3.135	0.065	356.0	525	7.00	50.0
4.007	Headwall 11	Headwall 12	12.510	0.600	3.135	2.780	0.355	35.2	525	7.05	49.8
1.009	Headwall 12	S18	5.486	0.600	2.780	2.765	0.015	365.7	525	7.47	48.5
1.010	S18	Outfall 1	8.659	0.600	2.765	2.700	0.065	133.2	225	7.60	48.1

Name	Vel (m/s)	Cap (l/s)	Flow (l/s)	US Depth (m)	DS Depth (m)	Σ Area (ha)	Σ Add Inflow (l/s)	Pro Depth (mm)	Pro Velocity (m/s)
4.004	1.206	261.1	8.9	2.131	1.944	0.049	0.0	65	0.571
4.005	1.050	227.3	8.9	1.944	1.146	0.049	0.0	70	0.518
4.006	1.181	255.7	8.9	1.146	0.710	0.049	0.0	66	0.564
4.007	3.782	818.6	8.9	0.710	1.065	0.049	0.0	38	1.278
1.009	1.165	252.2	47.2	1.065	1.086	0.269	0.0	153	0.902
1.010	1.131	45.0	46.8	1.386	0.605	0.269	0.0	196	1.277

Simulation Settings

Rainfall Methodology	FEH-22	Analysis Speed	Detailed	Additional Storage (m³/ha)	20.0
Summer CV	1.000	Skip Steady State	x	Check Discharge Rate(s)	x
Winter CV	1.000	Drain Down Time (mins)	4600	Check Discharge Volume	x

Storm Durations

15	30	60	120	180	240	360	480	600	720	960	1440	2160

Return Period (years)	Climate Change (CC %)	Additional Area (A %)	Additional Flow (Q %)
30	0	0	0

Node S18 Online Hydro-Brake® Control

Flap Valve	x	Objective	(HE) Minimise upstream storage
Replaces Downstream Link	x	Sump Available	✓
Invert Level (m)	2.765	Product Number	CTL-SHE-0049-1000-0800-1000
Design Depth (m)	0.800	Min Outlet Diameter (m)	0.075
Design Flow (l/s)	1.0	Min Node Diameter (mm)	1200

Node Headwall 12 Depth/Area Storage Structure

Base Inf Coefficient (m/hr)	0.00000	Safety Factor	2.0	Invert Level (m)	2.780
Side Inf Coefficient (m/hr)	0.00000	Porosity	1.00	Time to half empty (mins)	1410

Depth (m)	Area (m²)	Inf Area (m²)	Depth (m)	Area (m²)	Inf Area (m²)	Depth (m)	Area (m²)	Inf Area (m²)	Depth (m)	Area (m²)	Inf Area (m²)	Depth (m)	Area (m²)	Inf Area (m²)	Depth (m)	Area (m²)	Inf Area (m²)
0.000	153.3	0.0	0.300	196.4	0.0	0.600	244.9	0.0	0.900	298.5	0.0	1.200	357.2	0.0	1.500	421.0	0.0
0.100	166.9	0.0	0.400	212.0	0.0	0.700	262.2	0.0	1.000	317.5	0.0	1.300	377.9	0.0	1.590	441.1	0.0
0.200	181.4	0.0	0.500	228.1	0.0	0.800	280.0	0.0	1.100	337.0	0.0	1.400	399.2	0.0			

Flow+ v11.0 Copyright © 1988-2025 Causeway Technologies Ltd

Results for 30 year Critical Storm Duration. Lowest mass balance: 99.94%

Node Event	US Node	Peak (mins)	Level (m)	Depth (m)	Inflow (l/s)	Node Vol (m³)	Flood (m³)	Status
15 minute summer	S32	10	4.178	0.108	18.5	0.2149	0.0000	OK
15 minute summer	S33	10	4.010	0.135	34.5	0.2456	0.0000	OK
15 minute summer	S34	10	3.879	0.109	46.1	0.1536	0.0000	OK
15 minute summer	S35	10	4.122	0.072	11.3	0.1269	0.0000	OK
15 minute summer	S36	10	4.056	0.116	20.2	0.1965	0.0000	OK
15 minute summer	S37	10	3.789	0.079	28.5	0.1311	0.0000	OK
15 minute summer	S12	11	3.565	0.125	2.3	0.1414	0.0000	OK
15 minute summer	S13	11	3.566	0.241	80.5	0.3750	0.0000	OK
15 minute summer	S14	11	3.377	0.242	80.4	0.3465	0.0000	OK
600 minute winter	S15	600	3.335	0.245	7.1	0.3499	0.0000	OK
600 minute winter	S16	600	3.335	0.385	7.1	0.6795	0.0000	OK
600 minute winter	S17	600	3.335	0.400	7.5	0.7060	0.0000	OK
600 minute winter	Headwall 10	600	3.335	0.445	7.3	0.0000	0.0000	OK
15 minute summer	S43	11	3.511	0.041	3.0	0.0751	0.0000	OK
15 minute summer	S44	11	3.486	0.096	3.1	0.1691	0.0000	OK
15 minute summer	S51	10	4.451	0.041	9.2	0.0694	0.0000	OK
15 minute summer	S52	10	3.856	0.116	20.0	0.1544	0.0000	OK
15 minute summer	S45	11	3.485	0.115	22.2	0.2035	0.0000	OK
15 minute summer	S46	11	3.448	0.108	22.0	0.1906	0.0000	OK
15 minute summer	S47	12	3.352	0.112	22.0	0.1974	0.0000	OK
600 minute winter	S48	600	3.335	0.125	2.0	0.2200	0.0000	OK
600 minute winter	S49	600	3.334	0.134	2.0	0.2376	0.0000	OK
480 minute winter	Headwall 11	480	3.337	0.202	13.6	0.0000	0.0000	OK
600 minute winter	Headwall 12	600	3.335	0.555	17.6	107.7362	0.0000	SURCHARGED
600 minute winter	S18	600	3.335	0.570	1.2	1.0064	0.0000	SURCHARGED
15 minute summer	Outfall 1	197	2.722	0.022	0.9	0.0000	0.0000	OK

Link Event (Upstream Depth)	US Node	Link	DS Node	Outflow (l/s)	Velocity (m/s)	Flow/Cap	Link Vol (m³)	Discharge Vol (m³)
15 minute summer	S32	1.000	S33	18.2	1.007	0.426	0.3192	
15 minute summer	S33	1.001	S34	34.3	1.282	0.370	0.4051	
15 minute summer	S34	1.002	S13	45.9	1.723	0.266	0.4822	
15 minute summer	S35	2.000	S36	11.2	0.719	0.215	0.1707	
15 minute summer	S36	2.001	S37	19.9	0.999	0.492	0.5071	
15 minute summer	S37	2.002	S13	28.4	1.400	0.147	0.2829	
15 minute summer	S12	3.000	S13	-2.3	-0.233	-0.030	0.2994	
15 minute summer	S13	1.003	S14	80.4	1.171	0.703	2.3869	
15 minute summer	S14	1.004	S15	80.0	0.961	0.484	1.4143	
600 minute winter	S15	1.005	S16	7.1	0.548	0.043	2.5001	
600 minute winter	S16	1.006	S17	7.5	0.410	0.034	1.2132	
600 minute winter	S17	1.007	Headwall 10	7.3	0.495	0.032	3.6586	
600 minute winter	Headwall 10	1.008	Headwall 12	14.8	0.648	0.035	3.0465	
15 minute summer	S43	4.000	S44	2.9	0.217	0.013	0.6078	
15 minute summer	S44	4.001	S45	4.4	0.191	0.017	0.2201	
15 minute summer	S51	5.000	S52	9.2	0.745	0.071	0.1425	
15 minute summer	S52	5.001	S45	19.7	1.005	0.463	0.2037	
15 minute summer	S45	4.002	S46	22.0	0.658	0.095	0.4322	
15 minute summer	S46	4.003	S47	22.0	0.684	0.091	1.3102	
15 minute summer	S47	4.004	S48	21.5	0.640	0.082	0.3444	
600 minute winter	S48	4.005	S49	2.0	0.326	0.009	0.1857	
600 minute winter	S49	4.006	Headwall 11	2.4	0.488	0.009	1.3774	
480 minute winter	Headwall 11	4.007	Headwall 12	13.2	0.390	0.016	1.8288	
600 minute winter	Headwall 12	1.009	S18	1.2	0.102	0.005	1.1852	
600 minute winter	S18	1.010	Outfall 1	0.9	0.454	0.021	0.0178	155.1

Flow+ v11.0 Copyright © 1988-2025 Causeway Technologies Ltd

Design Settings

Rainfall Methodology	FEH-22	Maximum Time of Concentration (mins)	30.00	Preferred Cover Depth (m)	1.200
Return Period (years)	2	Maximum Rainfall (mm/hr)	50.0	Include Intermediate Ground	✓
Additional Flow (%)	0	Minimum Velocity (m/s)	1.00	Enforce best practice design rules	x
CV	1.000	Connection Type	Level Soffits		
Time of Entry (mins)	5.00	Minimum Backdrop Height (m)	0.200		

Nodes

Name	Area (ha)	T of E (mins)	Cover Level (m)	Diameter (mm)	Easting (m)	Northing (m)	Depth (m)
S32	0.040	5.00	5.497	1350	488636.659	98452.130	1.427
S33	0.035	5.00	5.645	1350	488639.211	98434.695	1.770
S34	0.025	5.00	5.633	1200	488644.558	98420.624	1.863
S35	0.024	5.00	5.500	1350	488669.789	98365.051	1.450
S36	0.019	5.00	5.375	1350	488663.111	98373.619	1.435
S37	0.019	5.00	5.339	1350	488657.748	98398.498	1.629
S12		5.00	5.115	1200	488645.830	98401.476	1.675
S13	0.013	5.00	5.445	1350	488652.410	98407.392	2.120
S14			5.776	1350	488680.660	98427.671	2.641
S15			5.787	1350	488694.620	98437.347	2.697
S16			5.460	1500	488709.861	98456.505	2.510
S17			4.801	1500	488715.397	98460.815	1.866
Headwall 10			4.370		488730.552	98473.410	1.480
S43	0.006	5.00	5.230	1500	488600.705	98501.038	1.760
S44			6.263	1500	488635.842	98498.701	2.873
S51	0.020	5.00	5.837	1350	488637.327	98475.267	1.427
S52	0.023	5.00	6.107	1200	488638.141	98486.380	2.367
S45			6.211	1500	488642.377	98495.869	2.841
S46			6.380	1500	488655.313	98496.000	3.040
S47			5.896	1500	488694.984	98489.479	2.656
S48			5.679	1500	488702.427	98482.443	2.469
S49			4.871	1500	488706.634	98484.018	1.671
Headwall 11			4.370		488729.774	98483.619	1.235
Headwall 12	0.044	5.00	4.370	1	488742.236	98482.533	1.590
S18			4.376	1500	488746.944	98485.350	1.611
Outfall 1			3.530		488753.451	98491.064	0.830

Links

Name	US Node	DS Node	Length (m)	ks (mm) / n	US IL (m)	DS IL (m)	Fall (m)	Slope (1:X)	Dia (mm)	T of C (mins)	Rain (mm/hr)
1.000	S32	S33	17.620	0.600	4.070	3.950	0.120	146.8	225	5.27	50.0
1.001	S33	S34	15.053	0.600	3.875	3.770	0.105	143.4	300	5.46	50.0
1.002	S34	S13	15.386	0.600	3.770	3.400	0.370	41.6	300	5.57	50.0
2.000	S35	S36	10.863	0.600	4.050	3.940	0.110	98.8	225	5.14	50.0
2.001	S36	S37	25.450	0.600	3.940	3.785	0.155	164.2	225	5.55	50.0
2.002	S37	S13	10.373	0.600	3.710	3.400	0.310	33.5	300	5.62	50.0
3.000	S12	S13	8.849	0.600	3.440	3.400	0.040	221.2	300	5.14	50.0
1.003	S13	S14	34.776	0.600	3.325	3.210	0.115	302.4	375	6.18	50.0
1.004	S14	S15	16.985	0.600	3.135	3.090	0.045	377.4	450	6.45	50.0
1.005	S15	S16	24.481	0.600	3.090	3.025	0.065	376.6	450	6.84	50.0
1.006	S16	S17	7.016	0.600	2.950	2.935	0.015	467.7	525	6.95	50.0
1.007	S17	Headwall 10	19.705	0.600	2.935	2.890	0.045	437.9	525	7.26	49.2
1.008	Headwall 10	Headwall 12	14.824	0.600	2.890	2.780	0.110	134.8	525	7.39	48.7
4.000	S43	S44	35.215	0.600	3.470	3.390	0.080	440.2	525	5.55	50.0
4.001	S44	S45	7.123	0.600	3.390	3.370	0.020	356.2	525	5.65	50.0
5.000	S51	S52	11.142	0.600	4.410	3.740	0.670	16.6	225	5.06	50.0
5.001	S52	S45	10.392	0.600	3.740	3.670	0.070	148.5	225	5.22	50.0
4.002	S45	S46	12.936	0.600	3.370	3.340	0.030	431.2	525	5.85	50.0
4.003	S46	S47	40.204	0.600	3.340	3.240	0.100	402.0	525	6.46	50.0

Name	Vel (m/s)	Cap (l/s)	Flow (l/s)	US Depth (m)	DS Depth (m)	Σ Area (ha)	Σ Add Inflow (l/s)	Pro Depth (mm)	Pro Velocity (m/s)
1.000	1.077	42.8	7.2	1.202	1.470	0.040	0.0	62	0.802
1.001	1.311	92.7	13.5	1.470	1.563	0.075	0.0	77	0.943
1.002	2.445	172.8	18.1	1.563	1.745	0.100	0.0	65	1.597
2.000	1.315	52.3	4.4	1.225	1.210	0.024	0.0	44	0.801
2.001	1.017	40.5	7.9	1.210	1.329	0.043	0.0	67	0.793
2.002	2.727	192.7	11.3	1.329	1.745	0.062	0.0	49	1.512
3.000	1.053	74.4	0.0	1.375	1.745	0.000	0.0	0	0.000
1.003	1.036	114.5	31.8	1.745	2.191	0.176	0.0	134	0.890
1.004	1.040	165.4	31.8	2.191	2.247	0.176	0.0	133	0.810
1.005	1.041	165.6	31.8	2.247	1.985	0.176	0.0	133	0.811
1.006	1.029	222.7	31.8	1.985	1.341	0.176	0.0	133	0.738
1.007	1.064	230.3	31.2	1.341	0.955	0.176	0.0	129	0.752
1.008	1.927	417.2	31.0	0.955	1.065	0.176	0.0	96	1.149
4.000	1.061	229.7	1.2	1.235	2.348	0.006	0.0	27	0.283
4.001	1.181	255.6	1.2	2.348	2.316	0.006	0.0	25	0.303
5.000	3.224	128.2	3.6	1.202	2.142	0.020	0.0	26	1.434
5.001	1.071	42.6	7.8	2.142	2.316	0.043	0.0	65	0.816
4.002	1.072	232.1	8.9	2.316	2.515	0.049	0.0	69	0.526
4.003	1.111	240.4	8.9	2.515	2.131	0.049	0.0	68	0.540

Flow+ v11.0 Copyright © 1988-2025 Causeway Technologies Ltd

Links

Name	US Node	DS Node	Length (m)	ks (mm) / n	US IL (m)	DS IL (m)	Fall (m)	Slope (1:X)	Dia (mm)	T of C (mins)	Rain (mm/hr)
4.004	S47	S48	10.242	0.600	3.240	3.210	0.030	341.4	525	6.60	50.0
4.005	S48	S49	4.492	0.600	3.210	3.200	0.010	449.2	525	6.67	50.0
4.006	S49	Headwall 11	23.143	0.600	3.200	3.135	0.065	356.0	525	7.00	50.0
4.007	Headwall 11	Headwall 12	12.510	0.600	3.135	2.780	0.355	35.2	525	7.05	49.8
1.009	Headwall 12	S18	5.486	0.600	2.780	2.765	0.015	365.7	525	7.47	48.5
1.010	S18	Outfall 1	8.659	0.600	2.765	2.700	0.065	133.2	225	7.60	48.1

Name	Vel (m/s)	Cap (l/s)	Flow (l/s)	US Depth (m)	DS Depth (m)	Σ Area (ha)	Σ Add Inflow (l/s)	Pro Depth (mm)	Pro Velocity (m/s)
4.004	1.206	261.1	8.9	2.131	1.944	0.049	0.0	65	0.571
4.005	1.050	227.3	8.9	1.944	1.146	0.049	0.0	70	0.518
4.006	1.181	255.7	8.9	1.146	0.710	0.049	0.0	66	0.564
4.007	3.782	818.6	8.9	0.710	1.065	0.049	0.0	38	1.278
1.009	1.165	252.2	47.2	1.065	1.086	0.269	0.0	153	0.902
1.010	1.131	45.0	46.8	1.386	0.605	0.269	0.0	196	1.277

Simulation Settings

Rainfall Methodology	FEH-22	Analysis Speed	Detailed	Additional Storage (m³/ha)	20.0
Summer CV	1.000	Skip Steady State	x	Check Discharge Rate(s)	x
Winter CV	1.000	Drain Down Time (mins)	4600	Check Discharge Volume	x

Storm Durations

15	30	60	120	180	240	360	480	600	720	960	1440	2160

Return Period (years)	Climate Change (CC %)	Additional Area (A %)	Additional Flow (Q %)
30	0	0	0

Node Outfall 1 Surcharged Outfall

Overrides Design Area	x	Depression Storage Area (m²)	0	Evapo-transpiration (mm/day)	0
Overrides Design Additional Inflow	x	Depression Storage Depth (mm)	0		

Applies to All storms

Time (mins)	Depth (m)	Time (mins)	Depth (m)
0	0.450	8640	0.450

Node S18 Online Hydro-Brake® Control

Flap Valve	x	Objective	(HE) Minimise upstream storage
Replaces Downstream Link	x	Sump Available	✓
Invert Level (m)	2.765	Product Number	CTL-SHE-0049-1000-0800-1000
Design Depth (m)	0.800	Min Outlet Diameter (m)	0.075
Design Flow (l/s)	1.0	Min Node Diameter (mm)	1200

Node Headwall 12 Depth/Area Storage Structure

Base Inf Coefficient (m/hr)	0.00000	Safety Factor	2.0	Invert Level (m)	2.780
Side Inf Coefficient (m/hr)	0.00000	Porosity	1.00	Time to half empty (mins)	

Depth (m)	Area (m²)	Inf Area (m²)	Depth (m)	Area (m²)	Inf Area (m²)	Depth (m)	Area (m²)	Inf Area (m²)	Depth (m)	Area (m²)	Inf Area (m²)	Depth (m)	Area (m²)	Inf Area (m²)	Depth (m)	Area (m²)	Inf Area (m²)
0.000	153.3	0.0	0.300	196.4	0.0	0.600	244.9	0.0	0.900	298.5	0.0	1.200	357.2	0.0	1.500	421.0	0.0
0.100	166.9	0.0	0.400	212.0	0.0	0.700	262.2	0.0	1.000	317.5	0.0	1.300	377.9	0.0	1.590	441.1	0.0
0.200	181.4	0.0	0.500	228.1	0.0	0.800	280.0	0.0	1.100	337.0	0.0	1.400	399.2	0.0			

Flow+ v11.0 Copyright © 1988-2025 Causeway Technologies Ltd

Results for 30 year Critical Storm Duration. Lowest mass balance: 99.23%

Node Event	US Node	Peak (mins)	Level (m)	Depth (m)	Inflow (l/s)	Node Vol (m³)	Flood (m³)	Status
15 minute summer	S32	10	4.178	0.108	18.5	0.2149	0.0000	OK
15 minute summer	S33	10	4.010	0.135	34.5	0.2456	0.0000	OK
15 minute summer	S34	10	3.879	0.109	46.1	0.1536	0.0000	OK
15 minute summer	S35	10	4.122	0.072	11.3	0.1269	0.0000	OK
15 minute summer	S36	10	4.056	0.116	20.2	0.1965	0.0000	OK
15 minute summer	S37	10	3.789	0.079	28.5	0.1311	0.0000	OK
15 minute summer	S12	11	3.565	0.125	2.3	0.1414	0.0000	OK
15 minute summer	S13	11	3.566	0.241	80.5	0.3750	0.0000	OK
1440 minute summer	S14	1200	3.378	0.243	5.0	0.3476	0.0000	OK
1440 minute summer	S15	1200	3.378	0.288	4.9	0.4121	0.0000	OK
1440 minute summer	S16	1200	3.378	0.428	4.7	0.7561	0.0000	OK
1440 minute summer	S17	1200	3.378	0.443	4.6	0.7826	0.0000	OK
1440 minute summer	Headwall 10	1200	3.378	0.488	4.5	0.0000	0.0000	OK
15 minute summer	S43	11	3.511	0.041	3.0	0.0751	0.0000	OK
15 minute summer	S44	11	3.486	0.096	3.1	0.1691	0.0000	OK
15 minute summer	S51	10	4.451	0.041	9.2	0.0694	0.0000	OK
15 minute summer	S52	10	3.856	0.116	20.0	0.1544	0.0000	OK
15 minute summer	S45	11	3.485	0.115	22.2	0.2035	0.0000	OK
15 minute summer	S46	11	3.448	0.108	22.0	0.1906	0.0000	OK
1440 minute summer	S47	1200	3.378	0.138	1.5	0.2436	0.0000	OK
1440 minute summer	S48	1200	3.378	0.168	1.5	0.2972	0.0000	OK
1440 minute summer	S49	1200	3.378	0.178	2.8	0.3148	0.0000	OK
1440 minute summer	Headwall 11	1140	3.378	0.243	6.0	0.0000	0.0000	OK
1440 minute summer	Headwall 12	1200	3.378	0.598	13.7	118.2234	0.0000	SURCHARGED
1440 minute summer	S18	1200	3.378	0.613	1.0	1.0831	0.0000	SURCHARGED
15 minute summer	Outfall 1	1	3.150	0.450	0.0	0.0000	0.0000	OK

Link Event (Upstream Depth)	US Node	Link	DS Node	Outflow (l/s)	Velocity (m/s)	Flow/Cap	Link Vol (m³)	Discharge Vol (m³)
15 minute summer	S32	1.000	S33	18.2	1.007	0.426	0.3192	
15 minute summer	S33	1.001	S34	34.3	1.282	0.370	0.4051	
15 minute summer	S34	1.002	S13	45.9	1.723	0.266	0.4822	
15 minute summer	S35	2.000	S36	11.2	0.719	0.215	0.1707	
15 minute summer	S36	2.001	S37	19.9	0.999	0.492	0.5071	
15 minute summer	S37	2.002	S13	28.4	1.400	0.147	0.2829	
15 minute summer	S12	3.000	S13	-2.3	-0.233	-0.030	0.2994	
15 minute summer	S13	1.003	S14	80.4	1.171	0.703	2.3869	
1440 minute summer	S14	1.004	S15	4.9	0.447	0.030	1.6508	
1440 minute summer	S15	1.005	S16	4.7	0.432	0.028	2.9437	
1440 minute summer	S16	1.006	S17	4.6	0.287	0.021	1.3432	
1440 minute summer	S17	1.007	Headwall 10	4.5	0.302	0.020	3.9772	
1440 minute summer	Headwall 10	1.008	Headwall 12	3.9	0.554	0.009	3.1524	
15 minute summer	S43	4.000	S44	2.9	0.217	0.013	0.6078	
15 minute summer	S44	4.001	S45	4.4	0.191	0.017	0.2201	
15 minute summer	S51	5.000	S52	9.2	0.745	0.071	0.1425	
15 minute summer	S52	5.001	S45	19.7	1.005	0.463	0.2037	
15 minute summer	S45	4.002	S46	22.0	0.658	0.095	0.4322	
15 minute summer	S46	4.003	S47	22.0	0.684	0.091	1.3102	
1440 minute summer	S47	4.004	S48	1.5	0.309	0.006	0.5362	
1440 minute summer	S48	4.005	S49	2.7	0.306	0.012	0.2787	
1440 minute summer	S49	4.006	Headwall 11	1.5	0.425	0.006	1.8755	
1440 minute summer	Headwall 11	4.007	Headwall 12	8.7	0.478	0.011	1.9640	
1440 minute summer	Headwall 12	1.009	S18	1.0	0.012	0.004	1.1852	
1440 minute summer	S18	1.010	Outfall 1	0.9	0.023	0.021	0.3444	107.9

Flow+ v11.0 Copyright © 1988-2025 Causeway Technologies Ltd

Design Settings

Rainfall Methodology	FEH-22	Maximum Time of Concentration (mins)	30.00	Preferred Cover Depth (m)	1.200
Return Period (years)	2	Maximum Rainfall (mm/hr)	50.0	Include Intermediate Ground	✓
Additional Flow (%)	0	Minimum Velocity (m/s)	1.00	Enforce best practice design rules	x
CV	1.000	Connection Type	Level Soffits		
Time of Entry (mins)	5.00	Minimum Backdrop Height (m)	0.200		

Nodes

Name	Area (ha)	T of E (mins)	Cover Level (m)	Diameter (mm)	Easting (m)	Northing (m)	Depth (m)
S32	0.040	5.00	5.497	1350	488636.659	98452.130	1.427
S33	0.035	5.00	5.645	1350	488639.211	98434.695	1.770
S34	0.025	5.00	5.633	1200	488644.558	98420.624	1.863
S35	0.024	5.00	5.500	1350	488669.789	98365.051	1.450
S36	0.019	5.00	5.375	1350	488663.111	98373.619	1.435
S37	0.019	5.00	5.339	1350	488657.748	98398.498	1.629
S12		5.00	5.115	1200	488645.830	98401.476	1.675
S13	0.013	5.00	5.445	1350	488652.410	98407.392	2.120
S14			5.776	1350	488680.660	98427.671	2.641
S15			5.787	1350	488694.620	98437.347	2.697
S16			5.460	1500	488709.861	98456.505	2.510
S17			4.801	1500	488715.397	98460.815	1.866
Headwall 10			4.370		488730.552	98473.410	1.480
S43	0.006	5.00	5.230	1500	488600.705	98501.038	1.760
S44			6.263	1500	488635.842	98498.701	2.873
S51	0.020	5.00	5.837	1350	488637.327	98475.267	1.427
S52	0.023	5.00	6.107	1200	488638.141	98486.380	2.367
S45			6.211	1500	488642.377	98495.869	2.841
S46			6.380	1500	488655.313	98496.000	3.040
S47			5.896	1500	488694.984	98489.479	2.656
S48			5.679	1500	488702.427	98482.443	2.469
S49			4.871	1500	488706.634	98484.018	1.671
Headwall 11			4.370		488729.774	98483.619	1.235
Headwall 12	0.044	5.00	4.370	1	488742.236	98482.533	1.590
S18			4.376	1500	488746.944	98485.350	1.611
Outfall 1			3.530		488753.451	98491.064	0.830

Links

Name	US Node	DS Node	Length (m)	ks (mm) / n	US IL (m)	DS IL (m)	Fall (m)	Slope (1:X)	Dia (mm)	T of C (mins)	Rain (mm/hr)
1.000	S32	S33	17.620	0.600	4.070	3.950	0.120	146.8	225	5.27	50.0
1.001	S33	S34	15.053	0.600	3.875	3.770	0.105	143.4	300	5.46	50.0
1.002	S34	S13	15.386	0.600	3.770	3.400	0.370	41.6	300	5.57	50.0
2.000	S35	S36	10.863	0.600	4.050	3.940	0.110	98.8	225	5.14	50.0
2.001	S36	S37	25.450	0.600	3.940	3.785	0.155	164.2	225	5.55	50.0
2.002	S37	S13	10.373	0.600	3.710	3.400	0.310	33.5	300	5.62	50.0
3.000	S12	S13	8.849	0.600	3.440	3.400	0.040	221.2	300	5.14	50.0
1.003	S13	S14	34.776	0.600	3.325	3.210	0.115	302.4	375	6.18	50.0
1.004	S14	S15	16.985	0.600	3.135	3.090	0.045	377.4	450	6.45	50.0
1.005	S15	S16	24.481	0.600	3.090	3.025	0.065	376.6	450	6.84	50.0
1.006	S16	S17	7.016	0.600	2.950	2.935	0.015	467.7	525	6.95	50.0
1.007	S17	Headwall 10	19.705	0.600	2.935	2.890	0.045	437.9	525	7.26	49.2
1.008	Headwall 10	Headwall 12	14.824	0.600	2.890	2.780	0.110	134.8	525	7.39	48.7
4.000	S43	S44	35.215	0.600	3.470	3.390	0.080	440.2	525	5.55	50.0
4.001	S44	S45	7.123	0.600	3.390	3.370	0.020	356.2	525	5.65	50.0
5.000	S51	S52	11.142	0.600	4.410	3.740	0.670	16.6	225	5.06	50.0
5.001	S52	S45	10.392	0.600	3.740	3.670	0.070	148.5	225	5.22	50.0
4.002	S45	S46	12.936	0.600	3.370	3.340	0.030	431.2	525	5.85	50.0
4.003	S46	S47	40.204	0.600	3.340	3.240	0.100	402.0	525	6.46	50.0

Name	Vel (m/s)	Cap (l/s)	Flow (l/s)	US Depth (m)	DS Depth (m)	Σ Area (ha)	Σ Add Inflow (l/s)	Pro Depth (mm)	Pro Velocity (m/s)
1.000	1.077	42.8	7.2	1.202	1.470	0.040	0.0	62	0.802
1.001	1.311	92.7	13.5	1.470	1.563	0.075	0.0	77	0.943
1.002	2.445	172.8	18.1	1.563	1.745	0.100	0.0	65	1.597
2.000	1.315	52.3	4.4	1.225	1.210	0.024	0.0	44	0.801
2.001	1.017	40.5	7.9	1.210	1.329	0.043	0.0	67	0.793
2.002	2.727	192.7	11.3	1.329	1.745	0.062	0.0	49	1.512
3.000	1.053	74.4	0.0	1.375	1.745	0.000	0.0	0	0.000
1.003	1.036	114.5	31.8	1.745	2.191	0.176	0.0	134	0.890
1.004	1.040	165.4	31.8	2.191	2.247	0.176	0.0	133	0.810
1.005	1.041	165.6	31.8	2.247	1.985	0.176	0.0	133	0.811
1.006	1.029	222.7	31.8	1.985	1.341	0.176	0.0	133	0.738
1.007	1.064	230.3	31.2	1.341	0.955	0.176	0.0	129	0.752
1.008	1.927	417.2	31.0	0.955	1.065	0.176	0.0	96	1.149
4.000	1.061	229.7	1.2	1.235	2.348	0.006	0.0	27	0.283
4.001	1.181	255.6	1.2	2.348	2.316	0.006	0.0	25	0.303
5.000	3.224	128.2	3.6	1.202	2.142	0.020	0.0	26	1.434
5.001	1.071	42.6	7.8	2.142	2.316	0.043	0.0	65	0.816
4.002	1.072	232.1	8.9	2.316	2.515	0.049	0.0	69	0.526
4.003	1.111	240.4	8.9	2.515	2.131	0.049	0.0	68	0.540

Flow+ v11.0 Copyright © 1988-2025 Causeway Technologies Ltd

Links

Name	US Node	DS Node	Length (m)	ks (mm) / n	US IL (m)	DS IL (m)	Fall (m)	Slope (1:X)	Dia (mm)	T of C (mins)	Rain (mm/hr)
4.004	S47	S48	10.242	0.600	3.240	3.210	0.030	341.4	525	6.60	50.0
4.005	S48	S49	4.492	0.600	3.210	3.200	0.010	449.2	525	6.67	50.0
4.006	S49	Headwall 11	23.143	0.600	3.200	3.135	0.065	356.0	525	7.00	50.0
4.007	Headwall 11	Headwall 12	12.510	0.600	3.135	2.780	0.355	35.2	525	7.05	49.8
1.009	Headwall 12	S18	5.486	0.600	2.780	2.765	0.015	365.7	525	7.47	48.5
1.010	S18	Outfall 1	8.659	0.600	2.765	2.700	0.065	133.2	225	7.60	48.1

Name	Vel (m/s)	Cap (l/s)	Flow (l/s)	US Depth (m)	DS Depth (m)	Σ Area (ha)	Σ Add Inflow (l/s)	Pro Depth (mm)	Pro Velocity (m/s)
4.004	1.206	261.1	8.9	2.131	1.944	0.049	0.0	65	0.571
4.005	1.050	227.3	8.9	1.944	1.146	0.049	0.0	70	0.518
4.006	1.181	255.7	8.9	1.146	0.710	0.049	0.0	66	0.564
4.007	3.782	818.6	8.9	0.710	1.065	0.049	0.0	38	1.278
1.009	1.165	252.2	47.2	1.065	1.086	0.269	0.0	153	0.902
1.010	1.131	45.0	46.8	1.386	0.605	0.269	0.0	196	1.277

Simulation Settings

Rainfall Methodology	FEH-22	Analysis Speed	Detailed	Additional Storage (m³/ha)	20.0
Summer CV	1.000	Skip Steady State	x	Check Discharge Rate(s)	x
Winter CV	1.000	Drain Down Time (mins)	4600	Check Discharge Volume	x

Storm Durations

15	30	60	120	180	240	360	480	600	720	960	1440	2160

Return Period (years)	Climate Change (CC %)	Additional Area (A %)	Additional Flow (Q %)
100	45	0	0

Node S18 Online Hydro-Brake® Control

Flap Valve	x	Objective	(HE) Minimise upstream storage
Replaces Downstream Link	x	Sump Available	✓
Invert Level (m)	2.765	Product Number	CTL-SHE-0049-1000-0800-1000
Design Depth (m)	0.800	Min Outlet Diameter (m)	0.075
Design Flow (l/s)	1.0	Min Node Diameter (mm)	1200

Node Headwall 12 Depth/Area Storage Structure

Base Inf Coefficient (m/hr)	0.00000	Safety Factor	2.0	Invert Level (m)	2.780
Side Inf Coefficient (m/hr)	0.00000	Porosity	1.00	Time to half empty (mins)	2475

Depth (m)	Area (m²)	Inf Area (m²)	Depth (m)	Area (m²)	Inf Area (m²)	Depth (m)	Area (m²)	Inf Area (m²)	Depth (m)	Area (m²)	Inf Area (m²)	Depth (m)	Area (m²)	Inf Area (m²)	Depth (m)	Area (m²)	Inf Area (m²)
0.000	153.3	0.0	0.300	196.4	0.0	0.600	244.9	0.0	0.900	298.5	0.0	1.200	357.2	0.0	1.500	421.0	0.0
0.100	166.9	0.0	0.400	212.0	0.0	0.700	262.2	0.0	1.000	317.5	0.0	1.300	377.9	0.0	1.590	441.1	0.0
0.200	181.4	0.0	0.500	228.1	0.0	0.800	280.0	0.0	1.100	337.0	0.0	1.400	399.2	0.0			

Flow+ v11.0 Copyright © 1988-2025 Causeway Technologies Ltd

Results for 100 year +45% CC Critical Storm Duration. Lowest mass balance: 99.91%

Node Event	US Node	Peak (mins)	Level (m)	Depth (m)	Inflow (l/s)	Node Vol (m³)	Flood (m³)	Status
15 minute summer	S32	10	4.230	0.160	33.7	0.3186	0.0000	OK
15 minute summer	S33	10	4.071	0.196	62.7	0.3570	0.0000	OK
15 minute summer	S34	10	3.934	0.164	83.9	0.2305	0.0000	OK
15 minute summer	S35	10	4.154	0.104	20.5	0.1834	0.0000	OK
15 minute summer	S36	11	4.116	0.176	36.7	0.2988	0.0000	OK
15 minute summer	S37	10	3.815	0.105	51.6	0.1747	0.0000	OK
15 minute summer	S12	11	3.736	0.296	3.3	0.3343	0.0000	OK
15 minute summer	S13	11	3.733	0.408	147.7	0.6355	0.0000	SURCHARGED
960 minute winter	S14	945	3.674	0.539	8.7	0.7708	0.0000	SURCHARGED
960 minute winter	S15	945	3.674	0.584	8.3	0.8353	0.0000	SURCHARGED
960 minute winter	S16	945	3.674	0.724	8.0	1.2788	0.0000	SURCHARGED
960 minute winter	S17	945	3.674	0.739	7.6	1.3053	0.0000	SURCHARGED
960 minute winter	Headwall 10	945	3.674	0.784	7.5	0.0000	0.0000	SURCHARGED
960 minute winter	S43	945	3.674	0.204	0.3	0.3751	0.0000	OK
960 minute winter	S44	945	3.674	0.284	0.3	0.5012	0.0000	OK
15 minute summer	S51	10	4.465	0.055	16.7	0.0933	0.0000	OK
15 minute summer	S52	10	3.917	0.177	36.3	0.2348	0.0000	OK
960 minute winter	S45	945	3.674	0.304	2.4	0.5365	0.0000	OK
960 minute winter	S46	945	3.674	0.334	2.4	0.5894	0.0000	OK
960 minute winter	S47	945	3.674	0.434	2.4	0.7662	0.0000	OK
960 minute winter	S48	945	3.674	0.464	3.0	0.8192	0.0000	OK
960 minute winter	S49	945	3.674	0.474	2.6	0.8369	0.0000	OK
960 minute winter	Headwall 11	945	3.674	0.539	17.5	0.0000	0.0000	SURCHARGED
960 minute winter	Headwall 12	945	3.674	0.894	22.2	198.3960	0.0000	SURCHARGED
960 minute winter	S18	945	3.674	0.909	1.1	1.6057	0.0000	SURCHARGED
960 minute winter	Outfall 1	945	2.724	0.024	1.0	0.0000	0.0000	OK

Link Event (Upstream Depth)	US Node	Link	DS Node	Outflow (l/s)	Velocity (m/s)	Flow/Cap	Link Vol (m³)	Discharge Vol (m³)
15 minute summer	S32	1.000	S33	33.1	1.151	0.774	0.5082	
15 minute summer	S33	1.001	S34	62.4	1.483	0.674	0.6631	
15 minute summer	S34	1.002	S13	84.8	1.711	0.491	0.8454	
15 minute summer	S35	2.000	S36	20.3	0.798	0.389	0.2776	
15 minute summer	S36	2.001	S37	36.1	1.138	0.891	0.8056	
15 minute summer	S37	2.002	S13	51.5	1.367	0.267	0.4791	
15 minute summer	S12	3.000	S13	3.8	-0.172	0.051	0.6222	
15 minute summer	S13	1.003	S14	146.4	1.377	1.279	3.4773	
960 minute winter	S14	1.004	S15	8.3	0.505	0.050	2.6912	
960 minute winter	S15	1.005	S16	8.0	0.513	0.048	3.8789	
960 minute winter	S16	1.006	S17	7.6	0.371	0.034	1.5157	
960 minute winter	S17	1.007	Headwall 10	7.5	0.410	0.032	4.2569	
960 minute winter	Headwall 10	1.008	Headwall 12	10.3	0.632	0.025	3.2025	
960 minute winter	S43	4.000	S44	0.3	0.174	0.001	3.4577	
960 minute winter	S44	4.001	S45	0.3	0.077	0.001	0.8845	
15 minute summer	S51	5.000	S52	16.6	0.827	0.130	0.2280	
15 minute summer	S52	5.001	S45	35.8	1.139	0.841	0.3266	
960 minute winter	S45	4.002	S46	2.4	0.353	0.010	1.7727	
960 minute winter	S46	4.003	S47	2.4	0.365	0.010	6.7435	
960 minute winter	S47	4.004	S48	2.6	0.344	0.010	2.0106	
960 minute winter	S48	4.005	S49	2.6	0.344	0.011	0.9141	
960 minute winter	S49	4.006	Headwall 11	3.5	0.480	0.014	4.8736	
960 minute winter	Headwall 11	4.007	Headwall 12	-14.0	0.437	-0.017	2.7026	
960 minute winter	Headwall 12	1.009	S18	1.1	0.082	0.004	1.1852	
960 minute winter	S18	1.010	Outfall 1	1.0	0.470	0.023	0.0193	296.4

Flow+ v11.0 Copyright © 1988-2025 Causeway Technologies Ltd

Design Settings

Rainfall Methodology	FEH-22	Maximum Time of Concentration (mins)	30.00	Preferred Cover Depth (m)	1.200
Return Period (years)	2	Maximum Rainfall (mm/hr)	50.0	Include Intermediate Ground	✓
Additional Flow (%)	0	Minimum Velocity (m/s)	1.00	Enforce best practice design rules	x
CV	1.000	Connection Type	Level Soffits		
Time of Entry (mins)	5.00	Minimum Backdrop Height (m)	0.200		

Nodes

Name	Area (ha)	T of E (mins)	Cover Level (m)	Diameter (mm)	Easting (m)	Northing (m)	Depth (m)
S32	0.040	5.00	5.497	1350	488636.659	98452.130	1.427
S33	0.035	5.00	5.645	1350	488639.211	98434.695	1.770
S34	0.025	5.00	5.633	1200	488644.558	98420.624	1.863
S35	0.024	5.00	5.500	1350	488669.789	98365.051	1.450
S36	0.019	5.00	5.375	1350	488663.111	98373.619	1.435
S37	0.019	5.00	5.339	1350	488657.748	98398.498	1.629
S12		5.00	5.115	1200	488645.830	98401.476	1.675
S13	0.013	5.00	5.445	1350	488652.410	98407.392	2.120
S14			5.776	1350	488680.660	98427.671	2.641
S15			5.787	1350	488694.620	98437.347	2.697
S16			5.460	1500	488709.861	98456.505	2.510
S17			4.801	1500	488715.397	98460.815	1.866
Headwall 10			4.370		488730.552	98473.410	1.480
S43	0.006	5.00	5.230	1500	488600.705	98501.038	1.760
S44			6.263	1500	488635.842	98498.701	2.873
S51	0.020	5.00	5.837	1350	488637.327	98475.267	1.427
S52	0.023	5.00	6.107	1200	488638.141	98486.380	2.367
S45			6.211	1500	488642.377	98495.869	2.841
S46			6.380	1500	488655.313	98496.000	3.040
S47			5.896	1500	488694.984	98489.479	2.656
S48			5.679	1500	488702.427	98482.443	2.469
S49			4.871	1500	488706.634	98484.018	1.671
Headwall 11			4.370		488729.774	98483.619	1.235
Headwall 12	0.044	5.00	4.370	1	488742.236	98482.533	1.590
S18			4.376	1500	488746.944	98485.350	1.611
Outfall 1			3.530		488753.451	98491.064	0.830

Links

Name	US Node	DS Node	Length (m)	ks (mm) / n	US IL (m)	DS IL (m)	Fall (m)	Slope (1:X)	Dia (mm)	T of C (mins)	Rain (mm/hr)
1.000	S32	S33	17.620	0.600	4.070	3.950	0.120	146.8	225	5.27	50.0
1.001	S33	S34	15.053	0.600	3.875	3.770	0.105	143.4	300	5.46	50.0
1.002	S34	S13	15.386	0.600	3.770	3.400	0.370	41.6	300	5.57	50.0
2.000	S35	S36	10.863	0.600	4.050	3.940	0.110	98.8	225	5.14	50.0
2.001	S36	S37	25.450	0.600	3.940	3.785	0.155	164.2	225	5.55	50.0
2.002	S37	S13	10.373	0.600	3.710	3.400	0.310	33.5	300	5.62	50.0
3.000	S12	S13	8.849	0.600	3.440	3.400	0.040	221.2	300	5.14	50.0
1.003	S13	S14	34.776	0.600	3.325	3.210	0.115	302.4	375	6.18	50.0
1.004	S14	S15	16.985	0.600	3.135	3.090	0.045	377.4	450	6.45	50.0
1.005	S15	S16	24.481	0.600	3.090	3.025	0.065	376.6	450	6.84	50.0
1.006	S16	S17	7.016	0.600	2.950	2.935	0.015	467.7	525	6.95	50.0
1.007	S17	Headwall 10	19.705	0.600	2.935	2.890	0.045	437.9	525	7.26	49.2
1.008	Headwall 10	Headwall 12	14.824	0.600	2.890	2.780	0.110	134.8	525	7.39	48.7
4.000	S43	S44	35.215	0.600	3.470	3.390	0.080	440.2	525	5.55	50.0
4.001	S44	S45	7.123	0.600	3.390	3.370	0.020	356.2	525	5.65	50.0
5.000	S51	S52	11.142	0.600	4.410	3.740	0.670	16.6	225	5.06	50.0
5.001	S52	S45	10.392	0.600	3.740	3.670	0.070	148.5	225	5.22	50.0
4.002	S45	S46	12.936	0.600	3.370	3.340	0.030	431.2	525	5.85	50.0
4.003	S46	S47	40.204	0.600	3.340	3.240	0.100	402.0	525	6.46	50.0

Name	Vel (m/s)	Cap (l/s)	Flow (l/s)	US Depth (m)	DS Depth (m)	Σ Area (ha)	Σ Add Inflow (l/s)	Pro Depth (mm)	Pro Velocity (m/s)
1.000	1.077	42.8	7.2	1.202	1.470	0.040	0.0	62	0.802
1.001	1.311	92.7	13.5	1.470	1.563	0.075	0.0	77	0.943
1.002	2.445	172.8	18.1	1.563	1.745	0.100	0.0	65	1.597
2.000	1.315	52.3	4.4	1.225	1.210	0.024	0.0	44	0.801
2.001	1.017	40.5	7.9	1.210	1.329	0.043	0.0	67	0.793
2.002	2.727	192.7	11.3	1.329	1.745	0.062	0.0	49	1.512
3.000	1.053	74.4	0.0	1.375	1.745	0.000	0.0	0	0.000
1.003	1.036	114.5	31.8	1.745	2.191	0.176	0.0	134	0.890
1.004	1.040	165.4	31.8	2.191	2.247	0.176	0.0	133	0.810
1.005	1.041	165.6	31.8	2.247	1.985	0.176	0.0	133	0.811
1.006	1.029	222.7	31.8	1.985	1.341	0.176	0.0	133	0.738
1.007	1.064	230.3	31.2	1.341	0.955	0.176	0.0	129	0.752
1.008	1.927	417.2	31.0	0.955	1.065	0.176	0.0	96	1.149
4.000	1.061	229.7	1.2	1.235	2.348	0.006	0.0	27	0.283
4.001	1.181	255.6	1.2	2.348	2.316	0.006	0.0	25	0.303
5.000	3.224	128.2	3.6	1.202	2.142	0.020	0.0	26	1.434
5.001	1.071	42.6	7.8	2.142	2.316	0.043	0.0	65	0.816
4.002	1.072	232.1	8.9	2.316	2.515	0.049	0.0	69	0.526
4.003	1.111	240.4	8.9	2.515	2.131	0.049	0.0	68	0.540

Flow+ v11.0 Copyright © 1988-2025 Causeway Technologies Ltd

Links

Name	US Node	DS Node	Length (m)	ks (mm) / n	US IL (m)	DS IL (m)	Fall (m)	Slope (1:X)	Dia (mm)	T of C (mins)	Rain (mm/hr)
4.004	S47	S48	10.242	0.600	3.240	3.210	0.030	341.4	525	6.60	50.0
4.005	S48	S49	4.492	0.600	3.210	3.200	0.010	449.2	525	6.67	50.0
4.006	S49	Headwall 11	23.143	0.600	3.200	3.135	0.065	356.0	525	7.00	50.0
4.007	Headwall 11	Headwall 12	12.510	0.600	3.135	2.780	0.355	35.2	525	7.05	49.8
1.009	Headwall 12	S18	5.486	0.600	2.780	2.765	0.015	365.7	525	7.47	48.5
1.010	S18	Outfall 1	8.659	0.600	2.765	2.700	0.065	133.2	225	7.60	48.1

Name	Vel (m/s)	Cap (l/s)	Flow (l/s)	US Depth (m)	DS Depth (m)	Σ Area (ha)	Σ Add Inflow (l/s)	Pro Depth (mm)	Pro Velocity (m/s)
4.004	1.206	261.1	8.9	2.131	1.944	0.049	0.0	65	0.571
4.005	1.050	227.3	8.9	1.944	1.146	0.049	0.0	70	0.518
4.006	1.181	255.7	8.9	1.146	0.710	0.049	0.0	66	0.564
4.007	3.782	818.6	8.9	0.710	1.065	0.049	0.0	38	1.278
1.009	1.165	252.2	47.2	1.065	1.086	0.269	0.0	153	0.902
1.010	1.131	45.0	46.8	1.386	0.605	0.269	0.0	196	1.277

Simulation Settings

Rainfall Methodology	FEH-22	Analysis Speed	Detailed	Additional Storage (m³/ha)	20.0
Summer CV	1.000	Skip Steady State	x	Check Discharge Rate(s)	x
Winter CV	1.000	Drain Down Time (mins)	4600	Check Discharge Volume	x

Storm Durations

15	30	60	120	180	240	360	480	600	720	960	1440	2160

Return Period (years)	Climate Change (CC %)	Additional Area (A %)	Additional Flow (Q %)
100	45	0	0

Node Outfall 1 Surcharged Outfall

Overrides Design Area	x	Depression Storage Area (m²)	0	Evapo-transpiration (mm/day)	0
Overrides Design Additional Inflow	x	Depression Storage Depth (mm)	0		

Applies to All storms

Time (mins)	Depth (m)	Time (mins)	Depth (m)
0	0.450	8640	0.450

Node S18 Online Hydro-Brake® Control

Flap Valve	x	Objective	(HE) Minimise upstream storage
Replaces Downstream Link	x	Sump Available	✓
Invert Level (m)	2.765	Product Number	CTL-SHE-0049-1000-0800-1000
Design Depth (m)	0.800	Min Outlet Diameter (m)	0.075
Design Flow (l/s)	1.0	Min Node Diameter (mm)	1200

Node Headwall 12 Depth/Area Storage Structure

Base Inf Coefficient (m/hr)	0.00000	Safety Factor	2.0	Invert Level (m)	2.780
Side Inf Coefficient (m/hr)	0.00000	Porosity	1.00	Time to half empty (mins)	3000

Depth (m)	Area (m²)	Inf Area (m²)	Depth (m)	Area (m²)	Inf Area (m²)	Depth (m)	Area (m²)	Inf Area (m²)	Depth (m)	Area (m²)	Inf Area (m²)	Depth (m)	Area (m²)	Inf Area (m²)	Depth (m)	Area (m²)	Inf Area (m²)
0.000	153.3	0.0	0.300	196.4	0.0	0.600	244.9	0.0	0.900	298.5	0.0	1.200	357.2	0.0	1.500	421.0	0.0
0.100	166.9	0.0	0.400	212.0	0.0	0.700	262.2	0.0	1.000	317.5	0.0	1.300	377.9	0.0	1.590	441.1	0.0
0.200	181.4	0.0	0.500	228.1	0.0	0.800	280.0	0.0	1.100	337.0	0.0	1.400	399.2	0.0			

Flow+ v11.0 Copyright © 1988-2025 Causeway Technologies Ltd

Results for 100 year +45% CC Critical Storm Duration. Lowest mass balance: 99.38%

Node Event	US Node	Peak (mins)	Level (m)	Depth (m)	Inflow (l/s)	Node Vol (m³)	Flood (m³)	Status
15 minute summer	S32	10	4.230	0.160	33.7	0.3186	0.0000	OK
15 minute summer	S33	10	4.071	0.196	62.7	0.3570	0.0000	OK
15 minute summer	S34	10	3.934	0.164	83.9	0.2305	0.0000	OK
15 minute summer	S35	10	4.154	0.104	20.5	0.1834	0.0000	OK
15 minute summer	S36	11	4.116	0.176	36.7	0.2988	0.0000	OK
15 minute summer	S37	10	3.815	0.105	51.6	0.1747	0.0000	OK
2160 minute winter	S12	2100	3.743	0.303	0.0	0.3431	0.0000	SURCHARGED
2160 minute winter	S13	2100	3.743	0.418	4.4	0.6519	0.0000	SURCHARGED
2160 minute winter	S14	2100	3.743	0.608	4.3	0.8706	0.0000	SURCHARGED
2160 minute winter	S15	2100	3.743	0.653	4.1	0.9350	0.0000	SURCHARGED
2160 minute winter	S16	2100	3.743	0.793	4.0	1.4020	0.0000	SURCHARGED
2160 minute winter	S17	2100	3.743	0.808	3.8	1.4285	0.0000	SURCHARGED
2160 minute winter	Headwall 10	2100	3.743	0.853	3.7	0.0000	0.0000	SURCHARGED
2160 minute winter	S43	2100	3.743	0.273	0.2	0.5033	0.0000	OK
2160 minute winter	S44	2100	3.743	0.353	0.2	0.6246	0.0000	OK
15 minute summer	S51	10	4.465	0.055	16.7	0.0933	0.0000	OK
15 minute summer	S52	10	3.917	0.177	36.3	0.2348	0.0000	OK
2160 minute winter	S45	2100	3.743	0.373	1.3	0.6599	0.0000	OK
2160 minute winter	S46	2100	3.743	0.403	1.3	0.7129	0.0000	OK
2160 minute winter	S47	2100	3.743	0.503	1.2	0.8895	0.0000	OK
2160 minute winter	S48	2100	3.743	0.533	1.2	0.9425	0.0000	SURCHARGED
2160 minute winter	S49	2100	3.743	0.543	1.1	0.9602	0.0000	SURCHARGED
2160 minute winter	Headwall 11	2100	3.743	0.608	5.1	0.0000	0.0000	SURCHARGED
2160 minute winter	Headwall 12	2100	3.743	0.963	7.6	219.6135	0.0000	SURCHARGED
2160 minute winter	S18	2100	3.743	0.978	1.0	1.7288	0.0000	SURCHARGED
15 minute summer	Outfall 1	1	3.150	0.450	0.9	0.0000	0.0000	OK

Link Event (Upstream Depth)	US Node	Link	DS Node	Outflow (l/s)	Velocity (m/s)	Flow/Cap	Link Vol (m³)	Discharge Vol (m³)
15 minute summer	S32	1.000	S33	33.1	1.151	0.774	0.5082	
15 minute summer	S33	1.001	S34	62.4	1.483	0.674	0.6631	
15 minute summer	S34	1.002	S13	84.8	1.711	0.491	0.8454	
15 minute summer	S35	2.000	S36	20.3	0.798	0.389	0.2776	
15 minute summer	S36	2.001	S37	36.1	1.138	0.891	0.8056	
15 minute summer	S37	2.002	S13	51.5	1.367	0.267	0.4791	
2160 minute winter	S12	3.000	S13	0.1	-0.007	0.001	0.6231	
2160 minute winter	S13	1.003	S14	4.3	0.485	0.037	3.8357	
2160 minute winter	S14	1.004	S15	4.1	0.372	0.025	2.6912	
2160 minute winter	S15	1.005	S16	4.0	0.364	0.024	3.8789	
2160 minute winter	S16	1.006	S17	3.8	0.255	0.017	1.5157	
2160 minute winter	S17	1.007	Headwall 10	3.7	0.304	0.016	4.2569	
2160 minute winter	Headwall 10	1.008	Headwall 12	3.7	0.488	0.009	3.2025	
2160 minute winter	S43	4.000	S44	0.2	0.169	0.001	4.7231	
2160 minute winter	S44	4.001	S45	0.2	0.078	0.001	1.1359	
15 minute summer	S51	5.000	S52	16.6	0.827	0.130	0.2280	
15 minute summer	S52	5.001	S45	35.8	1.139	0.841	0.3266	
2160 minute winter	S45	4.002	S46	1.3	0.287	0.006	2.2147	
2160 minute winter	S46	4.003	S47	1.2	0.276	0.005	7.8613	
2160 minute winter	S47	4.004	S48	1.2	0.267	0.005	2.1969	
2160 minute winter	S48	4.005	S49	0.9	0.256	0.004	0.9704	
2160 minute winter	S49	4.006	Headwall 11	1.1	0.349	0.004	4.9996	
2160 minute winter	Headwall 11	4.007	Headwall 12	-4.0	0.342	-0.005	2.7026	
2160 minute winter	Headwall 12	1.009	S18	1.0	0.089	0.004	1.1852	
2160 minute winter	S18	1.010	Outfall 1	0.9	0.023	0.021	0.3444	270.6

Flow+ v11.0 Copyright © 1988-2025 Causeway Technologies Ltd

APPENDIX D – SITE LEVELS & CONTOURS