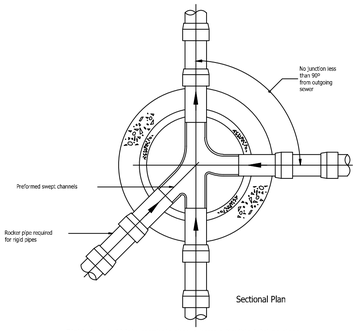

Rigid pipes built into manhole should have a flexible joint as close as feasible to the external face of the structure and the length of the next rocker pipe should be as shown.

Nominal diameter (mm)	Maximum effective length (m)
150 - 600	0.6
601 - 750	1.00
over 750	1.25

All pipes entering the bottom of the manhole to have soffits level.

TYPICAL ARRANGEMENT OF PIPE JUNCTIONS WITHIN MANHOLES (NTS)

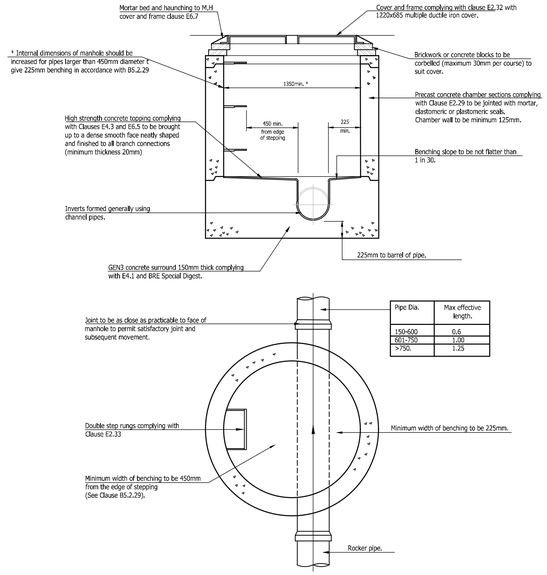

Pipe Dia.	Max effective length.
150-600	0.6
601-750	1.00
>750.	1.25

TYPICAL MANHOLE DETAIL - TYPE C
Depth from cover level to soffit less than 1.5m

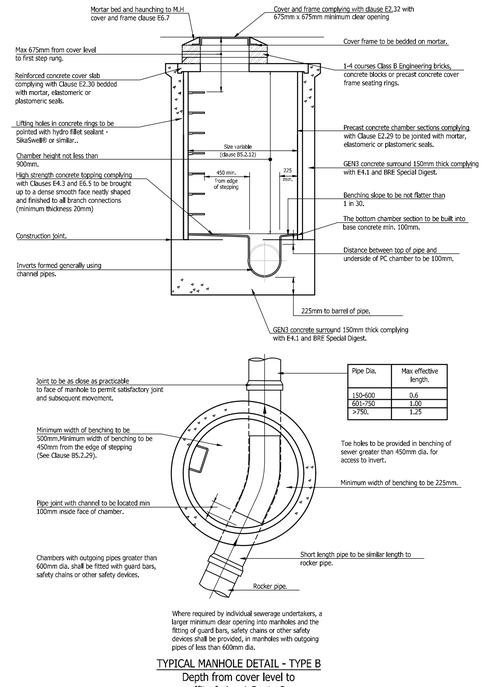

Pipe Dia.	Max effective length.
150-600	0.6
601-750	1.00
>750.	1.25

TYPICAL MANHOLE DETAIL - TYPE B
Depth from cover level to soffit of pipe 1.5m to 3m

GENERAL NOTES

1. The location, size, depth and identification of existing services that may be shown or referred to on this drawing have been assessed from non intrusive observations , record drawings or the like. The contractor shall safely carry out intrusive investigations, trial holes or soundings prior to commencing work to satisfy himself that it is safe to proceed and that the assessments are accurate. any discrepancies shall be notified to gta prior to works commencing.

2. Tender or billing drawings shall not be used for construction or the ordering of materials.

3. Do not scale. All dimensions and levels to be site confirmed.

4. This drawing shall be read in conjunction with all relevant architects, consultants drawings and specifications, together with H&S plan requirements.

5. Copyright : This drawing must not be copied, amended nor reproduced without the prior written agreement of gta.

6. All drawings specifications and recommendations made by gta are subject to Local Authority and other relevant Statutory Authorities approval. Any works or services made abortive due to the client proceeding prior to these approvals is considered wholly at the Clients risk. gta hold no responsibility for resulting abortive works or costs.

7. If viewing this drawing as an Autocad file (.dwg) in digital format then it is done so with this Disclaimer due to the fact that it can be altered and manipulated following its issue by GTA Civils & Transport and therefore, any alteration or modification of DWG data files provided by GTA Civils & Transport, by you or a third party, without GTA Civils and Transport's express written approval, is done so entirely at your own risk. Modification includes (but is not limited to) turning layers on and off, unfreezing layers and reloading, turning on and off print functions and unloading x-refs.

8. Your attention is also drawn to the fact that the information contained within this file may be subject to alteration at any time, pending technical approval from an approving authority or at the client's instruction. It is therefore strongly recommended that multiple and regular cross checks are made against the current contract drawings.
It is your responsibility to ensure that the correct issue or revision of the DWG data file is being used and requests for updated information made accordingly.

9. Should any apparent discrepancies between the data contained within the DWG file and the current contract drawings become evident, it must be reported back to GTA Civils & Transport as soon as reasonably practicable. Precedence should be given to the current contract drawings (PDF) unless advised otherwise.

Pipe Bedding & Sidefill Materials.

Type A bedding material shall be aggregates comforming to B.S 882, or BS EN 12620, nominal single-size or graded complying with the recommendations of WIs No. 4-08-01 as follows :-

TABLE 1 :

Pipe dia. (minimum)	Single-size.	Graded.
Over 100 to 150	10mm nominal single-size.	
Over 150 to 500	10 or 14mm nominal single-sized.	14mm to 5mm graded
Over 500	10,14 or 20mm nominal single-sized.	14 or 5mm graded or 20mm to 5mm graded.

Type B material shall be selected excavated or imported material consisting of uniform, readily compactible material, free from vegetable matter, building rubbish and frozen material, or materials susceptible to spontaneous combustion, and excluding clay of liquid limit greater than 80 and/or plastic limit greater than 55 and materials of excessive high moisture content. Clay lumps and stones retained on 75mm and 37.5mm sieves respectively shall be excluded from the fill material.

Pipes Laid with a Concrete Bedding

Class A concrete surround to be minimum cube strength at 28 days of 20N/mm² for non-aggressive soils. For aggressive soil conditions the concrete mix shall be in accordance with the requirements of BRE Digest 250, or BRE paper CP23/77 as appropriate.
The backfill, other than the first 150mm of cover, should not be placed before the compressive strength of the site concrete has reached 14N/mm². The concrete mix should be so designed that this is reached without unnecessary delay.

Compressible Filler and Packing for Pipelines.

Compressible filler for interrupting concrete protection to pipelines shall consist of bitumen impregnated insulating board to B.S 1142, or other equally compressible material. The thickness of compressible filler shall be as follows :-

Nominal diameter of pipe (mm)	Thickness of Compressible filler (mm)
Less than 450	18
450 - 1200	36
Exceeding 1200	54

Compressible packing for use between pipes and precast concrete setting blocks shall consist of bitumen damp-proof sheeting complying with B.S 743.

NO WORKS TO COMMENCE UNTIL SECTION 104 AGREEMENT IS SIGNED BY ALL PARTIES.

ALL ADOPTABLE ELEMENTS OF THE WORKS TO BE CONSTRUCTED AS DETAILED IN THE SECTOR GUIDANCE IN RELATION TO THE ADOPTION OF SEWERAGE ASSETS BY SEWERAGE COMPANIES IN ENGLAND AS ENABLED BY WATER UK'S CODE FOR ADOPTIONS.

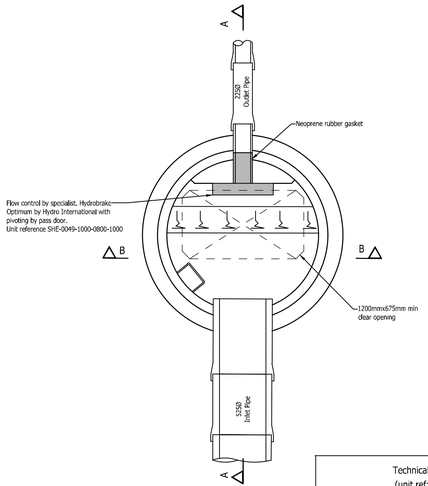

Plan

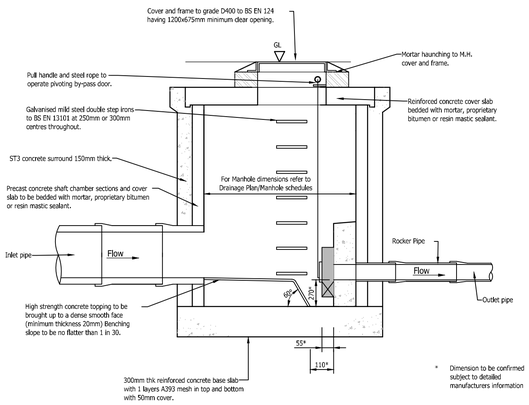

Section A-A

Flow Control Chamber
Typical Detail

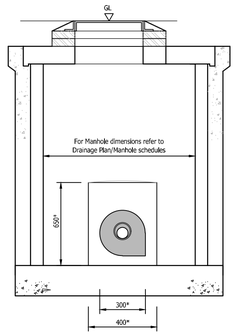

Section B-B

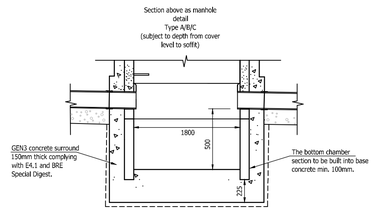

CATCHPIT DETAIL

Technical Specification of Flow Control
(unit ref: SHE-0049-1000-0800-1000)

Control Point	Head (m)	Flow (l/s)
Primary Design	0.800	1.000
Flush-Flo	0.216	0.931
Kick-Flo	0.438	0.768
Mean Flow		0.843

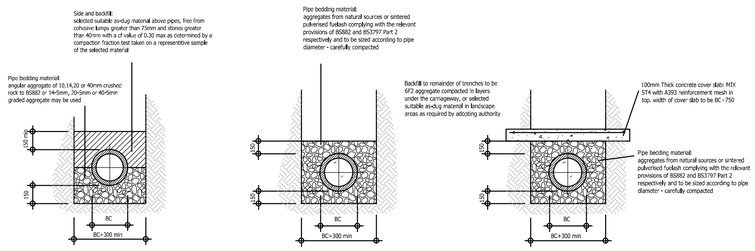

CLASS B BEDDING
For use where cover to crown of pipe is greater than 900mm under verges, footways & cycleways

CLASS S BEDDING
For use where cover to crown of pipe is greater than 1200mm under carriageways

CLASS Z BEDDING
For use where cover to crown of pipe is less than 1200mm under carriageways, or less than 900mm under other areas

PIPE BEDDING DETAILS

Rev	Amendments	Date	Dsn	Chk
C1	CONSTRUCTION ISSUE	19.01.26	DT	MR
P1	INITIAL ISSUE	03.10.25	DT	MR

Status
CONSTRUCTION

Client
NORTHGATE PROPERTIES LTD

Architect

Project
SUMMER LANE, PAGHAM
WEST SUSSEX

Title
ESTATE ROAD
MAIN DRAINAGE DETAILS
SHEET 1

Date	Scale @ A1
OCTOBER 2025	NTS
Clients Ref.	Project Ref. 13226

gta Civils & Transport
Maple House, 192-198 London Road,
Burgess Hill, West Sussex, RH15 9RD
Tel.01444 871444 Web: www.gtacivils.co.uk

Drawing Number 13226/1551
Rev. C1