TECHNICAL NOTE

Discharge of Condition 3 – Surface Water Drainage Scheme

Project	AEG11457
Site	16 Sea Way, Middleton-on-Sea, West Sussex, PO22 7SA
Client	Brad Hanson, Bald Builders
Subject	Discharge of Condition 3 of planning permission M/48/26/HH (proposed garage)
Document Reference	AEG11457-TN01
Revision / Date	A – 09/11/2026
Prepared by	Oliver Harvey
Review/Auth	JA/JM

1. Introduction

Arun District Council granted planning permission M/48/26/HH on 6 October 2026 for a proposed garage at 16 Sea Way, Middleton-on-Sea. Condition 3 of the permission requires full details of the surface water drainage scheme to be submitted to and approved by the local planning authority before development starts.

This Technical Note provides those details. It sets out the proposed drainage of the garage roof, the design criteria and hydraulic calculations, the specification of each component and a maintenance plan. It has been prepared with reference to the Arun District Council SuDS Design Checklist (October 2025) and the National Standards for Sustainable Drainage Systems.

This note should be read in conjunction with the following documents:

- Aegaea drawing AEG11457-DR01 Rev A03, Surface Water Drainage Strategy (drainage layout and impermeable area plan).
- Aegaea drawing AEG11457-DR02 Rev A02, Surface Water Drainage Long Section.
- Aegaea drawing AEG11457-DR03 Rev A02, Surface Water Drainage Construction Details.
- Aegaea Flood Risk Assessment AEG11457_PO22_MiddletonOnSea_07, dated 29/07/2026 (approved under Condition 2).
- Aegaea drawing AEG9092-CIV-001 Rev A01, Proposed Surface Water Connection (approved connection from S1 to the privately owned surface water sewer).
- InfoDrainage calculations: base model (free outfall), surcharged outfall model and 50 mm orifice sensitivity test (Appendix D).
- Sky Garden Wildflower Blanket System specification: System Summary SGWBSS01 v1.2, Data Sheet SGWB01 v1.0 and System Diagram WBSD01 v1.1 (Appendix E).
- FEH22 rainfall point descriptors for the site (submitted separately, Appendix F).

2. Condition 3

Condition 3 states:

> *"Prior to the commencement of development, full details of the proposed surface water drainage scheme must be submitted and approved in writing by the local planning authority. The full details submitted for approval shall include: 1. Detailed drainage plans and details conforming to Local Planning Authority guidance, 2. Specifications for all surface water drainage components and associated infrastructure or flow control mechanisms, 3. Impermeable area plan, 4. Calculations modelling the surface water drainage network for the following storm events: a.) 100% Annual Exceedance Probability, b.) 10% AEP + climate change allowance, c.) 3.3% AEP + climate change allowance, and d.) 1% AEP + climate change allowance. All storm events must include an allowance for urban creep and surcharged outfalls where appropriate, 5. A Maintenance Plan for the drainage system."*

Table 1 shows where each part of the condition is addressed.

Table 1: Condition 3 requirements and where they are addressed

Item	Requirement	Where addressed
1	Detailed drainage plans and details	Drawings AEG11457-DR01, DR02 and DR03; Sections 5 and 12
2	Specifications for all components and flow control	Section 5; drawing AEG11457-DR03; Sky Garden specification (Appendix E)
3	Impermeable area plan	Drawing AEG11457-DR01; Section 6
4	Calculations for the required storm events, urban creep and surcharged outfalls	Sections 6 to 10; InfoDrainage calculations (Appendix D)
5	Maintenance plan	Section 13

3. Site and Proposed Development

The site is a residential plot fronting Sea Way. EA LiDAR data shows ground levels across the garage location of approximately 5.23 to 5.25 metres Above Ordnance Datum (m AOD). The proposed garage lies near the southern boundary, between the replacement dwelling and Sea Way.

The garage has a roof area of 36 m². This comprises 30 m² of Sky Garden Wildflower Blanket green roof and a 6 m² riverstone border. The garage finished floor level (FFL) is 5.240 m AOD, flush with external ground levels.

The garage is built on existing permeable surfacing that is not currently positively drained. The proposed roof drainage is therefore a new discharge to the drainage network.

The replacement dwelling on the site has its own approved surface water drainage, which discharges to manhole S1. From S1, an approved 150 mm pipe connects to the public surface water sewer in Sea Way at S2 (drawing AEG9092-CIV-001). The dwelling drainage does not form part of this application.

The approved Flood Risk Assessment shows the site lies outside the modelled 1 in 200 year plus climate change (2115) tidal flood extent. There are no watercourses in the vicinity of the site.

4. Surface Water Discharge Hierarchy

The discharge destination has been selected in accordance with the drainage hierarchy.

- **Rainwater reuse:** The roof area is small, and the green roof retains rainfall and returns it to the atmosphere by evapotranspiration. A separate rainwater harvesting system is not proposed.
- **Infiltration:** Infiltration testing and groundwater monitoring carried out for the replacement dwelling on the same plot found slow infiltration in clay soils and shallow groundwater, and infiltration was ruled out for that scheme. A soakaway would also need to be at least 5 m from buildings, which cannot be achieved on this plot. Infiltration is therefore not viable.
- **Watercourse:** There are no watercourses near the site.
- **Surface water sewer:** The garage connects into the approved surface water drain of the dwelling, which discharges to manhole S1 on the approved surface water system, which connects to the privately owned surface water sewer. No surface water is discharged to the foul or combined sewer.

5. Proposed Drainage Scheme

The proposed drainage is shown on drawing AEG11457-DR01, in long section on drawing AEG11457-DR02 and in construction details on drawing AEG11457-DR03 (green roof build-up, downpipe connection with access pipe and rest bend, and pipe bedding). It comprises:

- **Green roof:** A Sky Garden Wildflower Blanket System on 30 m² of the roof, with a 6 m² riverstone border (500 mm, 20–40 mm stone). The build-up comprises a 3.5 mm protection fleece, a 20 mm drainage and reservoir board, a 2 mm filter fleece, 80 mm of bio-diverse substrate and a 30 mm pre-

grown wildflower blanket (38 native species), approximately 103.5 mm in total. The manufacturer quotes a water reservoir capacity of 8–10 L/m² and a 70% reduction in runoff. The riverstone border sits on the same drainage and reservoir board as the green roof.

- **Rainwater downpipe:** A single rainwater downpipe (RWP1) at the south-west corner of the garage, with the roof laid to fall to an outlet at this corner. An access pipe with a sealed, screwed access door is fitted in the downpipe just above ground level. The downpipe connects to the below-ground drain through a sealed rest bend, with no open gully.
- **Access:** No inspection chamber is required. The garage connects to the approved drain through a single short branch from the base of RWP1. Approved Document H requires access at a junction only where each run cannot be cleared from an access point. The branch can be rodded from the access pipe at the base of RWP1, through the junction and on to S1, and the approved drain can be rodded from manhole S1. Both runs are well within the maximum spacing of access points in Approved Document H.
- **Connection to the approved drain:** A 100 mm diameter uPVC pipe, 2.6 m long, at a gradient of 1 in 100 from the base of RWP1 (IL 4.867 m AOD) to a new 45° junction on the approved 100 mm surface water drain of the dwelling, south of the garage (IL 4.841 m AOD). The junction enters in the direction of flow. From the junction, the approved drain runs 2.7 m to S1 (incoming IL 4.808 m AOD, soffit level with the 150 mm outgoing pipe). The approved drain is assumed to be laid at 1 in 80; its invert at the junction is to be confirmed on site before the connection is made.
- **Downstream (approved):** S1 (CL 5.250 m AOD, IL 4.758 m AOD) and the 150 mm pipe at 1 in 150 to S2 (CL 5.012 m AOD, IL 4.474 m AOD) on the privately owned surface water sewer, as approved under AEG9092-CIV-001.

Pipe cover is shallow because the invert of the approved manhole S1 is only 0.49 m below ground. Pipes with less than 0.6 m cover in landscaped areas, or 0.9 m beneath the driveway, will be protected with a concrete slab or surround in accordance with Approved Document H and the Class Z bedding detail on drawing AEG11457-DR03.

No flow control is proposed. The reasons are set out in Section 9.

6. Design Criteria

The drainage has been modelled in InfoDrainage 2026.4. The design criteria are summarised in Table 2.

Table 2: Design criteria

Parameter	Value
Rainfall	FEH22, point descriptors at GB 497120 99876 (Appendix F)
Storm durations	15 to 1440 minutes, summer and winter profiles
Events modelled	1:2 year; 1:2 year + 40%; 1:10 year + 40%; 1:30 year; 1:30 year + 40%; 1:100 year; 1:100 year + 45%
Climate change	Upper end peak rainfall allowances, 2070s epoch (100-year development lifetime): 40% for the 1:30 year event and 45% for the 1:100 year event. The 40% allowance is also applied to the 1:2 year and 1:10 year events
Contributing area	36 m² roof + 10% urban creep = 39.6 m², modelled as 40 m² (0.004 ha)
Urban creep	Included in the modelled area; global urban creep factor set to 0% to avoid double counting
Runoff coefficient (Cv)	1.0 summer and winter
Green roof	Depression storage 8 mm (lower bound of the 8–10 L/m² reservoir capacity); evapotranspiration 3.0 mm/day; decay coefficient 0.05
Pipe roughness	Colebrook-White ks = 0.6 mm
Outfall	S2 on the privately owned surface water sewer: free outfall (base model) and fixed surcharged level of 5.00 m AOD (surcharged model)

The riverstone border sits on the same drainage and reservoir board as the green roof and drains through it to the roof outlet. The full roof is therefore modelled as a green roof catchment. The 10% urban creep

allowance has been applied to the full 36 m² roof, as required by the SuDS Design Checklist, and is included in the modelled area. The modelled area is shown on drawing AEG11457-DR01, which forms the impermeable area plan.

Condition 3 requests the 1:1 year event. FEH22 rainfall is derived from annual maximum series, which does not define a 1:1 year event; the lowest return period available is the 1:2 year event. The 1:2 year event has therefore been modelled both without and with a 40% climate change allowance, in line with the SuDS Design Checklist. The 1:2 year + 40% event exceeds any 1:1 year event, so it represents the lowest event in the condition conservatively.

The model also includes the privately owned surface water sewer downstream of S2 (manholes CP, CP1, SW1 to SW3 and CP2), based on the CCTV survey and levels on drawing AEG9092-CIV-001, to show that flows from the garage are conveyed onwards without flooding.

7. Interception

The SuDS Design Checklist requires that the first 5 mm of rainfall in most events produces no runoff. The green roof reservoir holds 8–10 L/m², equivalent to 8–10 mm of rainfall, which is retained and lost by evapotranspiration. This exceeds the 5 mm interception standard. The manufacturer also quotes an annual runoff reduction of approximately 70%.

In the hydraulic model, the green roof is represented as 8 mm of depression storage, the lower end of the manufacturer's 8–10 L/m² range. The first 8 mm of rainfall in each storm is held on the roof and the remainder runs off. The manufacturer's 70% figure is an average reduction in runoff over a year, most of which comes from small storms that the roof absorbs entirely. In the larger design storms the roof fills early and passes most of the rainfall, so the 70% reduction has not been applied in the model. The modelled flows are therefore conservative.

8. Hydraulic Performance

Table 3 summarises the results of the base model with a free outfall. Full results are in Appendix D.

Table 3: Results of the base model, free outfall (InfoDrainage)

Event	Peak flow from RWP1 (L/s)	Max. level RWP1 base (m AOD)	Max. level S1 (m AOD)	Flooding
1:2 year	0.2	4.880	4.771	None
1:2 year + 40%	0.3	4.883	4.774	None
1:10 year + 40%	0.5	4.888	4.778	None
1:30 year + 40%	0.7	4.891	4.781	None
1:100 year + 45%	0.9	4.895	4.784	None

In the critical 1:100 year + 45% event, the maximum water level at the base of RWP1 is 4.895 m AOD, 0.345 m below ground level. There is no flooding at any chamber in any event, including the downstream privately owned sewer.

The peak flow of 0.9 L/s uses 15% of the capacity of the 100 mm pipe from RWP1 to the junction, 13% of the capacity of the approved 100 mm drain from the junction to S1 and 6% of the capacity of the approved 150 mm pipe from S1 to S2. The approved connection therefore has ample capacity for the garage.

Peak velocities are 0.5–0.6 m/s, below the usual 1 m/s self-cleansing velocity. This is unavoidable at flows this small from a 40 m² roof. The pipes carry only clean roof water from a green roof, which has a filter fleece above the drainage layer, and the access pipe at the base of RWP1 and manhole S1 give rodding access to the full length of the connection.

9. Discharge Rate

The SuDS Design Checklist limits discharge to QBAR or 3 L/s/ha, whichever is greater. For the 0.004 ha catchment, 3 L/s/ha is 0.012 L/s, which no flow control can achieve. The garage roof therefore discharges unrestricted, with a peak of 0.9 L/s in the critical 1:100 year + 45% event.

To test whether a flow control would make any difference, the model was rerun with a 50 mm orifice plate at the outlet of the roof drainage (Appendix D). The peak outflow in the 1:100 year + 45% event is 0.9 L/s, the same as with no orifice. The maximum water depth at the orifice is only 56 mm, so it provides no attenuation. The sensitivity test used an earlier layout, with two downpipes draining to an inspection chamber connected directly to S1. The roof catchment and peak inflow are unchanged, so the conclusion is not affected.

A flow control that reduced the peak would need an orifice of around 15 mm, together with attenuation storage on the roof or below ground. The SuDS Design Checklist requires orifices smaller than 50 mm to be robustly protected from blockage. Green roofs shed fine substrate and organic debris, particularly while the vegetation establishes. A restriction of this size on a householder system would rely on the homeowner maintaining a catchpit for the lifetime of the development. If it blocked, water would back up the downpipe to the roof outlet. A flow control would therefore increase flood risk rather than reduce it.

Runoff is instead managed at source by the green roof, which provides interception (Section 7) and an annual reduction in runoff volume of approximately 70%.

10. Surcharged Outfall

The surface water sewer in Sea Way outfalls onto the beach. The outfall sits high on the beach, above the level of Mean High Water Springs, so it is not submerged on normal high tides and the risk of the sewer becoming tide-locked or surcharged is low. As a precaution, a surcharged outfall model has nevertheless been run with a fixed water level of 5.00 m AOD at S2, equal to the cover level of the receiving sewer, for all events. This represents the receiving sewer being fully surcharged. Any higher level would mean the sewer itself was flooding Sea Way, which is a sewer flooding scenario rather than a design case for this connection.

In the critical 1:100 year + 45% event, the maximum water level is 5.004 m AOD at the base of RWP1 (0.236 m below ground level) and 5.002 m AOD at S1 (0.248 m below its cover level). There is no flooding in any event. S2 is reported as “Flood Risk” in the results because the imposed boundary level of 5.00 m AOD is 12 mm below its cover; this is the boundary condition, not a modelled result.

There is no chamber on the garage drainage. The downpipe connects through a sealed rest bend and the access pipe has a sealed, screwed access door. Even if the downstream network surcharged beyond the modelled level, water could not escape at ground level from the garage drainage; it would rise harmlessly within the downpipe, with the roof outlet well above ground level.

11. Exceedance, Water Quality, Amenity and Biodiversity

- **Exceedance:** If the roof outlet were blocked, water would overtop the roof edge onto the surrounding permeable surfacing, as happens on the site at present. The garage is a non-habitable outbuilding.
- **Water quality:** Roof runoff carries a very low pollution hazard. The green roof filters and treats rainfall at source before it reaches the drain.
- **Amenity and biodiversity:** The wildflower blanket contains 38 native species (33 wildflowers and 5 grasses) chosen for a long flowering season and value to pollinators. It provides amenity and biodiversity benefits that a conventional roof would not.

12. Construction Method Statement

- Install the below-ground drainage first: expose the approved dwelling drain at the connection point, confirm its invert (assumed IL 4.841 m AOD) and form a 100 mm 45° junction in the direction of flow, then lay the 2.6 m branch to the base of RWP1. Protect shallow pipes as described in Section 5.
- Cap the open end of the branch at the base of RWP1 until the downpipe is connected, so that no silt or debris enters the approved system.

- Install the green roof build-up in accordance with the manufacturer's instructions once the roof deck and waterproofing are complete. Irrigate during establishment as the manufacturer recommends.
- Before the garage is brought into use, rod the branch from the RWP1 access pipe, inspect S1, remove any construction debris and confirm free flow from the downpipe.

13. Maintenance Plan

The drainage will be owned and maintained by the property owner for the lifetime of the development. In accordance with Condition 3, the local planning authority will be given access to inspect the drainage. The maintenance schedule is set out in Table 4.

Table 4: Maintenance schedule

Component	Activity	Frequency
Green roof	Inspect vegetation cover (target >90%); remove weeds, invasive species and old growth; spring remedial work and autumn strimming	Twice a year (spring and autumn)
	Irrigate during establishment and in prolonged dry periods	First six months; then as needed
Roof outlet, riverstone border and gutters	Inspect; remove leaves, debris and vegetation from the outlet	Twice a year and after severe storms
Rainwater downpipe and rest bend	Inspect for damage and blockage; rod from the access pipe if slow to drain	Annually; as needed
Access pipe at the base of RWP1	Open the access door, check flow and remove any silt or debris; check the door seals correctly	Annually
Pipework (RWP1 to the approved drain)	Rod from the RWP1 access pipe or jet if a blockage is found; CCTV survey if problems recur	As needed
S1 and onward connection	Maintained as part of the approved dwelling drainage	As approved

14. Conclusion

- The garage roof drains through a 30 m² wildflower green roof and a single downpipe at the south-west corner, then through a short branch to the approved dwelling drain, manhole S1 and the privately owned surface water sewer. Infiltration is not viable and there is no nearby watercourse.
- The green roof retains 8–10 mm of rainfall, which meets the 5 mm interception standard, and reduces annual runoff by approximately 70%.
- The calculations cover the 1:2 year (with and without climate change), 1:10 year + 40%, 1:30 year + 40% and 1:100 year + 45% events, with 10% urban creep. There is no flooding in any event, with either a free or a surcharged outfall.
- The unrestricted peak of 0.9 L/s uses 6% of the capacity of the approved connection. A flow control would provide no benefit and would introduce a blockage risk.
- A maintenance plan is provided, and the drainage will be maintained by the property owner.

On this basis, we consider that the information required by Condition 3 has been provided, and we respectfully request that Condition 3 is discharged.

Appendices

- Appendix A: Drawing AEG11457-DR01 Rev A03, Surface Water Drainage Strategy (including impermeable area plan).
- Appendix B: Drawing AEG11457-DR02 Rev A02, Surface Water Drainage Long Section.
- Appendix C: Drawing AEG11457-DR03 Rev A02, Surface Water Drainage Construction Details.
- Appendix D: InfoDrainage calculations (base model, surcharged outfall model, 50 mm orifice sensitivity test).

- Appendix E: Sky Garden Wildflower Blanket System specification.
- Appendix F: FEH22 rainfall point descriptors (submitted separately).

Appendix A - Surface Water Drainage Strategy



DO NOT SCALE THIS DRAWING. USE FIGURED DIMENSIONS ONLY.
THE CONTRACTOR MUST CHECK & VERIFY ALL DIMENSIONS ON SITE.
ANY DISCREPANCIES MUST BE REPORTED IMMEDIATELY TO THE ENGINEER FOR CLARIFICATION BEFORE PROCEEDING.
THIS DRAWING IS COPYRIGHT AND OWNED BY AEGAEA.

SAFETY, HEALTH AND ENVIRONMENTAL INFORMATION
REFER TO THE RELEVANT CONSTRUCTION (DESIGN AND MANAGEMENT) DOCUMENTATION WHERE APPLICABLE.
IT IS ASSUMED THAT ALL WORKS ON THIS DRAWING WILL BE CARRIED OUT BY A COMPETENT CONTRACTOR, WORKING WHERE APPROPRIATE TO AN APPROVED METHOD STATEMENT.

Planning

Key

Catchment Areas

Existing

Surface Water Pipe

Surface Water Manhole/Inspection Chamber

Proposed (Approved as part of separate application for dwelling)

Surface Water Pipe

Surface Water Manhole/Inspection Chamber

Proposed

Surface Water Pipe

Rainwater Downpipe

Green Roof

Rev	Date	Description	By
A03	09/11/26	Single downpipe RWP1; IC1 and RWP2 removed	OH
A01	27/07/26	First Issue	AS

Client
Brad Hanson, Bald Builders

Project
16 Sea Way, Middleton on Sea, PO22 7SA

Title
Surface Water Drainage Strategy

Project No.	Drawing No.	Revision
AEG11457	DR01	A03

Drawn	Checked	Approved	Date	Scale @ A1
AS	ML	NB	July 2026	1:100

Drawing Status
Discharge of Condition

aegaea
water, civils and environment

© Aegaea - File Name: G:\Shared drives\AEG11000-11999\AEG11457_PO22_MiddletonOnSea_05\WIP\Drawings\11457-DR01-A03.dwg

Appendix B - Surface Water Drainage Long Section

LONG SECTION: RWP1 - JUNCTION - S1 - S2

HORIZONTAL SCALE 1:100, VERTICAL SCALE 1:5

RESULTS: 1 IN 100 YEAR + 45% CC, 60 MIN SUMMER CRITICAL STORM (FREE OUTFALL)

- ENERGY GRADE LINE (EGL)
- HYDRAULIC GRADE LINE (HGL)
- GROUND LEVEL
- FLOW DEPTH IN PIPE

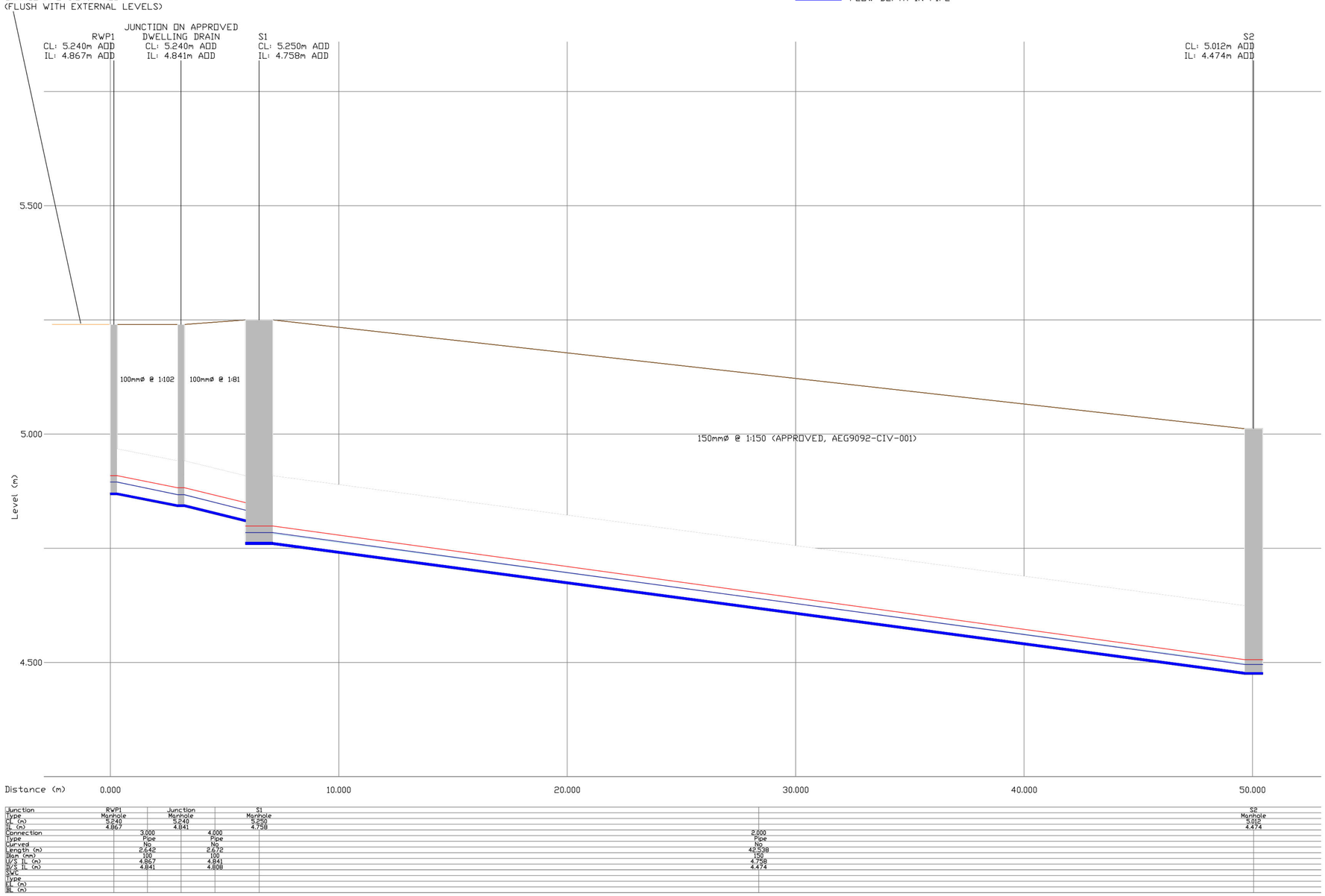

Junction	RWP1		Junction		S1						S2
Type	Manhole		Manhole		Manhole						Manhole
CL (m)	5.240		5.240		5.250						5.012
IL (m)	4.867		4.841		4.758						4.474
Connection		3.000		4.000		2.000					
Type		Pipe		Pipe		Pipe					
Curved		No		No		No					
Length (m)		2.642		2.672		42.538					
Diam (mm)		100		100		150					
U/S IL (m)		4.867		4.841		4.758					
D/S IL (m)		4.841		4.808		4.474					
SWC											
Type											
FL (m)											
BL (m)											

DO NOT SCALE THIS DRAWING. USE FIGURED DIMENSIONS ONLY.
THE CONTRACTOR MUST CHECK & VERIFY ALL DIMENSIONS ON SITE.
ANY DISCREPANCIES MUST BE REPORTED IMMEDIATELY TO THE ENGINEER FOR CLARIFICATION BEFORE PROCEEDING.
THIS DRAWING IS COPYRIGHT AND OWNED BY AEGAEA.

SAFETY, HEALTH AND ENVIRONMENTAL INFORMATION
REFER TO THE RELEVANT CONSTRUCTION (DESIGN AND MANAGEMENT) DOCUMENTATION WHERE APPLICABLE.
IT IS ASSUMED THAT ALL WORKS ON THIS DRAWING WILL BE CARRIED OUT BY A COMPETENT CONTRACTOR, WORKING WHERE APPROPRIATE TO AN APPROVED METHOD STATEMENT.

Planning

NOTES
1. ALL LEVELS ARE IN METRES ABOVE ORDNANCE DATUM (m AOD).
2. HORIZONTAL SCALE 1:100, VERTICAL SCALE 1:5 (VERTICAL EXAGGERATION x20).
3. LONG SECTION EXPORTED FROM THE INFODRAINAGE MODEL. RESULTS SHOWN FOR THE CRITICAL 1 IN 100 YEAR + 45% CLIMATE CHANGE 60 MINUTE SUMMER STORM EVENT (FREE OUTFALL). RED LINE: ENERGY GRADE LINE (EGL). BLUE LINE: HYDRAULIC GRADE LINE (HGL).
4. GARAGE FINISHED FLOOR LEVEL 5.240m AOD, FLUSH WITH EXTERNAL GROUND LEVELS.
5. S1, THE DWELLING DRAIN (JUNCTION - S1) AND THE S1 - S2 CONNECTION AS APPROVED UNDER AEG9092-CIV-001. DWELLING DRAIN ASSUMED LAID AT 1 IN 80; ITS INVERT AT THE JUNCTION AND S2 LEVELS TO BE CONFIRMED ON SITE.
6. TO BE READ IN CONJUNCTION WITH DRAWING AEG11457-DR01.

Rev	Date	Description	By
A02	09/11/26	Single downpipe RWP1, IC1 removed	DH
A01	05/11/26	First Issue	DH

Client
Brad Hanson, Bald Builders

Project
16 Sea Way, Middleton on Sea, Arun, West Sussex, PO22 7SA

Title
Surface Water Drainage Long Section

Project No.	Drawing No.	Revision
AEG11457	DR02	A02

Drawn	Checked	Approved	Date	Scale @ A1
OH	-	-	November 2026	As Shown

Drawing Status
Discharge of Condition

aegaea
water, civils and environment

© Aegaea - File Name: G:\Shared drives\AEG11000-11999\AEG11457_PO22_MiddletonOnSea_05\WIP\Drawings\11457-DR02-A02.dwg

Appendix C - Surface Water Drainage Construction Details

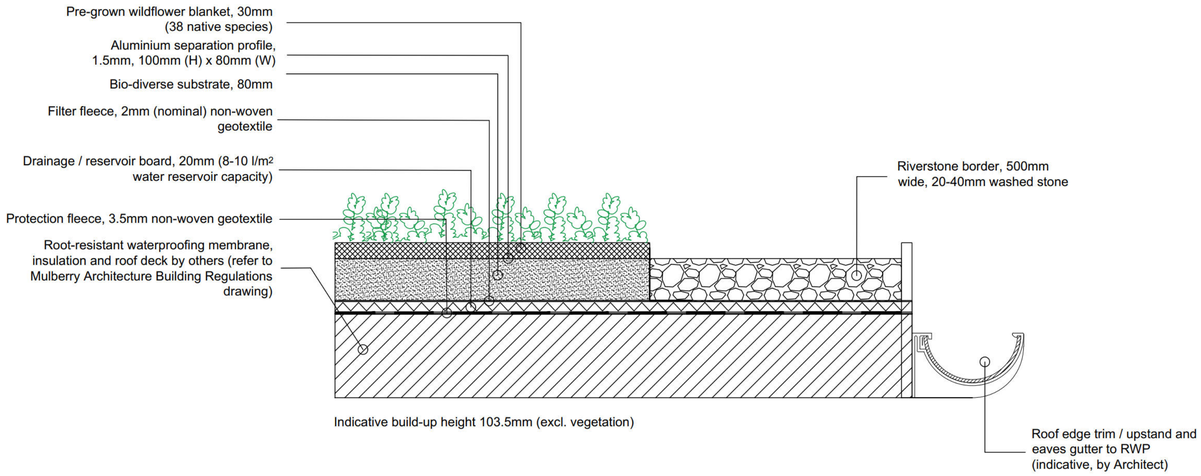

GREEN ROOF BUILD-UP: SKY GARDEN WILDFLOWER BLANKET SYSTEM

NOT TO SCALE. Based on Sky Garden system diagram WBSD01 v1.1. Install to manufacturer's specification.

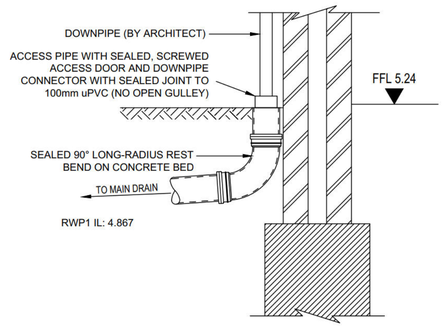

RWP CONNECTION.

(1:20)

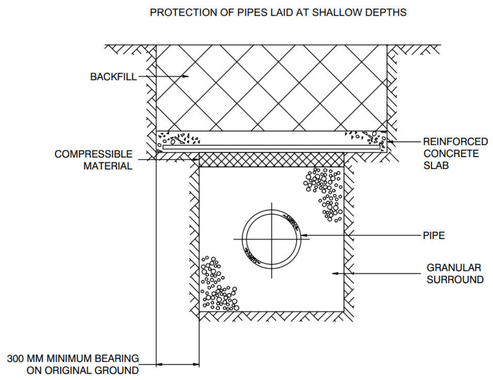

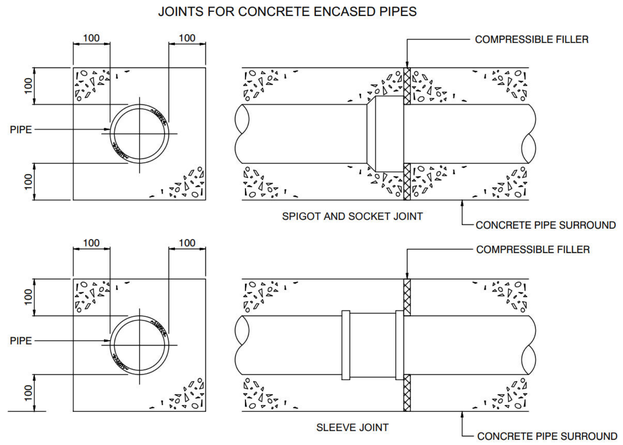

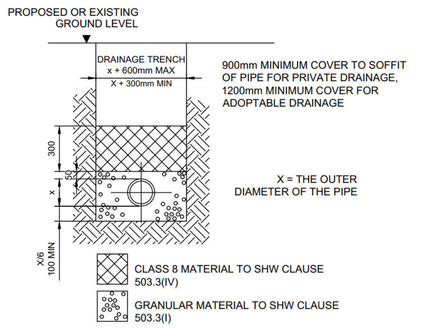

NOTE: CLASS `S` BEDDING FOR USE WITH ALL ADOPTABLE DRAINAGE WITH COVER TO SOFFIT OF PIPE GREATER THAN 1200mm. PRIVATE DRAINAGE WITHIN LANDSCAPED AND OTHER NON-TRAFFICKED AREAS WITH COVER GREATER THAN 1000mm TO THE PIPE SOFFIT MAY USE PIPE BEDDING CLASS `T` REFER TO DRAWING F1 (SHW) HIGHWAY CONSTRUCTION DETAILS.

CLASS 'S' PIPE BEDDING

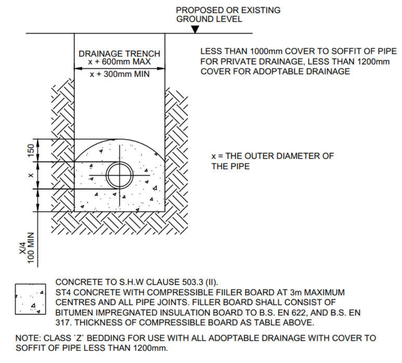

CONCRETE TO S.H.W CLAUSE 503.3 (II).
ST4 CONCRETE WITH COMPRESSIBLE FILLER BOARD AT 3m MAXIMUM CENTRES AND ALL PIPE JOINTS. FILLER BOARD SHALL CONSIST OF BITUMEN IMPREGNATED INSULATION BOARD TO B.S. EN 622, AND B.S. EN 317. THICKNESS OF COMPRESSIBLE BOARD AS TABLE ABOVE.

NOTE: CLASS `Z` BEDDING FOR USE WITH ALL ADOPTABLE DRAINAGE WITH COVER TO SOFFIT OF PIPE LESS THAN 1200mm.

CLASS 'Z' PIPE BEDDING

DO NOT SCALE THIS DRAWING. USE FIGURED DIMENSIONS ONLY.
THE CONTRACTOR MUST CHECK & VERIFY ALL DIMENSIONS ON SITE.
ANY DISCREPANCIES MUST BE REPORTED IMMEDIATELY TO THE ENGINEER FOR CLARIFICATION BEFORE PROCEEDING.
THIS DRAWING IS COPYRIGHT AND OWNED BY AEGAEA.

SAFETY, HEALTH AND ENVIRONMENTAL INFORMATION

REFER TO THE RELEVANT CONSTRUCTION (DESIGN AND MANAGEMENT) DOCUMENTATION WHERE APPLICABLE.
IT IS ASSUMED THAT ALL WORKS ON THIS DRAWING WILL BE CARRIED OUT BY A COMPETENT CONTRACTOR, WORKING WHERE APPROPRIATE TO AN APPROVED METHOD STATEMENT.

GENERAL NOTES

1. THIS DRAWING IS INDICATIVE ONLY AND SUBJECT TO CHANGE DURING DETAILED DESIGN AND APPROVALS FROM RELEVANT STATUTORY BODIES.
2. POSITIONS OF EXISTING SERVICES/STATUTORY UNDERTAKERS APPARATUS ADJACENT TO OR CROSSING PROPOSED EXCAVATIONS ARE TO BE CONFIRMED PRIOR TO START ON SITE.
3. THIS DRAWING IS TO BE READ IN CONJUNCTION WITH AND CHECKED AGAINST ALL ENGINEERING DETAILS, SPECIFICATIONS, GEOTECHNICAL AND OTHER RELEVANT DOCUMENTATION PROVIDED.
4. THIS DRAWING IS SCHEMATIC FOR CLARITY ONLY, POSITIONS OF PIPE RUNS AND MANHOLES MAY VARY ON SITE DUE TO SITE CONDITIONS.
5. WHERE EXISTING OR PROPOSED TREES ARE ADJACENT TO ACCESS ROADS OR DRAINAGE, ROOT BARRIERS (TYPE TO BE APPROVED) ARE REQUIRED TO PREVENT STRUCTURAL DAMAGE.
6. ANY ANOMALY OR CONTRADICTIONS BETWEEN ANY OF THE ABOVE IS TO BE REPORTED IMMEDIATELY.
7. THE DESIGN IS TO COMPLY IN ALL ASPECTS WITH THE CURRENT BRITISH STANDARDS, BUILDING REGULATIONS AND BUILDING LEGISLATION ETC.
8. ALL PIPE SIZES, CHAMBER DEPTHS, SIZE & QUANTITY SUBJECT TO REVIEW AND DETAILED DESIGN. ALL ADOPTED PIPE WORK ROUTING AND ANY EASEMENTS SUBJECT TO FULL DESIGN REVIEW AND APPROVAL BY THE RELEVANT BODIES.
9. DRAINAGE DESIGN SUBJECT TO DETAILED LEVELS AND EXTERNAL WORKS DESIGN.
10. ARCHITECT TO CONFIRM ANY THRESHOLD DRAINAGE REQUIREMENTS.
11. GREEN ROOF: SKY GARDEN WILDFLOWER BLANKET SYSTEM, INSTALLED AND MAINTAINED TO THE MANUFACTURER'S SPECIFICATION (SGWBSS01 v1.2, SGWB01 v1.0, WBSD01 v1.1). ROOF STRUCTURE, WATERPROOFING AND EDGE / GUTTER DETAILS BY ARCHITECT.
12. BELOW-GROUND PIPES 100mm uPVC. PIPES WITH LESS THAN 0.6m COVER (0.9m BENEATH DRIVEWAY) TO BE PROTECTED WITH CONCRETE (CLASS Z). OTHERWISE CLASS S BEDDING.
13. CLASS S AND CLASS Z BEDDING DETAILS AS AEG9092-CIV-001-A01.
14. EXISTING DWELLING DRAIN BENEATH THE GARAGE TO BE PROTECTED AS THE MULBERRY ARCHITECTURE BUILDING REGULATIONS DRAWING ("DRAINS UNDER FLOOR SLAB").
15. NEW 100mm CONNECTION FROM THE BASE OF RWP1 (IL 4.867) INTO THE APPROVED SURFACE WATER DRAIN OF THE DWELLING VIA A 45° JUNCTION (IL 4.841), ENTERING IN THE DIRECTION OF FLOW. JUNCTION TO MATCH THE DRAIN MATERIAL, WITH PROPRIETARY FLEXIBLE COUPLINGS. APPROVED DRAIN ASSUMED LAID AT 1 IN 80 TO S1 (INCOMING IL 4.808). EXPOSE THE DRAIN AND CONFIRM ITS INVERT AT THE JUNCTION BEFORE LAYING THE NEW PIPE BACK TO RWP1.
16. TO BE READ IN CONJUNCTION WITH DRAWINGS AEG11457-DR01 (LAYOUT) AND AEG11457-DR02 (LONG SECTION).

THIS DRAWING IS FOR DISCHARGE OF CONDITION SUBJECT TO RELEVANT APPROVALS.

Rev	Date	Description	By
A02	09.11.26	SINGLE DOWNPIPE RWP1; IC1 REMOVED	OH
A01	06.11.26	FIRST ISSUE	OH

Client

BRAD HANSON, BALD BUILDERS

Project

16 SEA WAY, MIDDLETON ON SEA, WEST SUSSEX, PO22 7SA

Title

PROPOSED SURFACE WATER DRAINAGE DETAILS

Project No.	Drawing No.	Revision
AEG11457	DR03	A02

Drawn	Checked	Approved	Date	Scale @ A1
OH	CM	NDD	NOV 2026	AS SHOWN

Drawing Status

DISCHARGE OF CONDITION

aegaea
water, civils and environment

© Aegaea - File Name: G:\Shared drives\AEG11000-11999\AEG11457_PO22_MiddletonOnSea_05\WIP\Drawings\11457-DR03-A02.dwg

Appendix D - InfoDrainage calculations (base model, surcharged outfall model, 50 mm orifice sensitivity test).



Green Roof Area

Type : Catchment Area

Area (ha)	0.004

Dynamic Sizing

Runoff Method	Green Roof
Summer Volumetric Runoff Coefficient	1.000
Winter Volumetric Runoff Coefficient	1.000
Depression Storage (mm)	8
Evapotranspiration (mm/day)	3.0
Decay Coefficiency	0.050
Time Delay (mins)	120

Project:	Date:		
AEG11457 16 Sea Way, Middleton on Sea, West Sussex Proposed Network - Base Model	09/11/2026 Designed by: OH	Checked by: JA	Approved By: NB
Report Details: Type: Junctions Storm Phase: Phase	Company Address: Aegaea Limited		

Name	Junction Type	Easting (m)	Northing (m)	Cover Level (m)	Depth (m)	Invert Level (m)	Chamber Shape	Diameter (m)
RWP1	Manhole	652.343	-340.955	5.240	0.373	4.867	Circular	0.300
S1	Manhole	654.661	-345.523	5.250	0.492	4.758	Circular	1.200
CP	Manhole	612.346	-350.752	5.000	0.500	4.500	Circular	1.200
CP1	Manhole	615.263	-365.395	5.090	0.789	4.301	Circular	1.200
SW3	Manhole	618.355	-373.799	5.095	0.820	4.275	Circular	1.200
SW2	Manhole	623.597	-388.931	5.004	0.887	4.117	Circular	1.200
SW1	Manhole	632.278	-413.691	5.017	1.174	3.843	Circular	1.200
CP2	Manhole	637.029	-426.366	5.005	1.443	3.562	Circular	1.200
S2	Manhole	612.728	-352.670	5.012	0.538	4.474	Circular	0.800
Junction	Manhole	654.125	-342.905	5.240	0.399	4.841	Circular	0.300

Name	Lock
RWP1	None
S1	None
CP	None
CP1	None
SW3	None
SW2	None
SW1	None
CP2	None
S2	None
Junction	None

Inlets

Junction	Inlet Name	Incoming Item(s)	Bypass Destination	Capacity Type
RWP1	Inlet	Green Roof Area	(None)	No Restriction
S1	Inlet	4.000	(None)	No Restriction
CP1	Inlet	1.001	(None)	No Restriction
SW3	Inlet	1.002	(None)	No Restriction
SW2	Inlet	1.003	(None)	No Restriction
SW1	Inlet	1.004	(None)	No Restriction
CP2	Inlet	1.005	(None)	No Restriction
S2	Inlet	1.000	(None)	No Restriction
	Inlet (1)	2.000	(None)	No Restriction
Junction	Inlet	3.000	(None)	No Restriction

Outlets

Junction	Outlet Name	Outgoing Connection	Outlet Type
RWP1	Outlet (1)	3.000	Free Discharge
S1	Outlet	2.000	Free Discharge
CP	Outlet	1.000	Free Discharge
CP1	Outlet	1.002	Free Discharge
SW3	Outlet	1.003	Free Discharge
SW2	Outlet	1.004	Free Discharge
SW1	Outlet	1.005	Free Discharge
S2	Outlet	1.001	Free Discharge
Junction	Outlet	4.000	Free Discharge

Project:	Date:		
AEG11457 16 Sea Way, Middleton on Sea, West Sussex Proposed Network - Base Model	09/11/2026 Designed by: OH	Checked by: JA	Approved By: NB
Report Details: Type: Connections Storm Phase: Phase	Company Address: Aegaea Limited		

Name	Length (m)	Connection Type	Slope (1:X)	Manning's n	Colebrook-White Roughness (mm)	Diameter / Base Width (mm)	Upstream Cover Level (m)	Upstream Invert Level (m)
1.000	1.956	Pipe	75.026		0.6	150	5.000	4.500
1.002	8.955	Pipe	344.407		0.6	150	5.090	4.301
1.003	16.015	Pipe	101.359		0.6	150	5.095	4.275
1.004	26.237	Pipe	95.756		0.6	150	5.004	4.117
1.005	13.537	Pipe	48.173		0.6	150	5.017	3.843
1.001	12.975	Pipe	75.026		0.6	150	5.012	4.474
2.000	42.538	Pipe	149.748		0.6	150	5.250	4.758
4.000	2.672	Pipe	80.973		0.6	100	5.240	4.841
3.000	2.642	Pipe	101.617		0.6	100	5.240	4.867

Name	Downstream Cover Level (m)	Downstream Invert Level (m)	Part Family	Lock	Culvert Type	Culvert Entrance	Wall Thickness (mm)	Material
1.000	5.012	4.474		None	(None)	(None)	0	
1.002	5.095	4.275		None	(None)	(None)	0	
1.003	5.004	4.117		None	(None)	(None)	0	
1.004	5.017	3.843		None	(None)	(None)	0	
1.005	5.005	3.562		None	(None)	(None)	0	
1.001	5.090	4.301		None	(None)	(None)	0	
2.000	5.012	4.474		None	(None)	(None)	0	
4.000	5.250	4.808		None	(None)	(None)	0	
3.000	5.240	4.841		None	(None)	(None)	0	

Name	Trench Width (mm)	Bedding Material	Surrounding Material
1.000	0		
1.002	0		
1.003	0		
1.004	0		
1.005	0		
1.001	0		
2.000	0		
4.000	0		
3.000	0		

Project:	Date:		
AEG11457 16 Sea Way, Middleton on Sea, West Sussex Proposed Network - Base Model		Designed by:	Checked by:	Approved By:
		OH	JA	NB
Report Details: Type: Inflow Summary Storm Phase: Phase	Company Address: Aegaea Limited			

Inflow Label	Connected To	Flow (L/s)	Runoff Method	Area (ha)	Percentage Impervious (%)	Urban Creep (%)	Adjusted Percentage Impervious (%)	Area Analysed (ha)
Green Roof Area	RWP1		Green Roof	0.004		0		0.004
TOTAL		**0.0**		**0.004**				**0.004**

Project:	Date:		
AEG11457 16 Sea Way, Middleton on Sea, West Sussex Proposed Network - Base Model		Designed by: OH	Checked by: JA	Approved By: NB
Report Details: Type: Outfall Details Storm Phase: Phase	Company Address: Aegaea Limited		

aegaea
water, civils and environment

Outfalls

Outfall	Outfall Type	Gated	Fixed Surcharged Level (m)	Level Curve
CP2	Free Discharge			

Runoff Type	Dynamic
Output Interval (mins)	5
Time Step	Default
Urban Creep	Apply Global Value
Urban Creep Global Value (%)	0
Junction Flood Risk Margin (mm)	300
Perform No Discharge Analysis	☐

Rainfall

FEH

Type: FEH

Site Location	GB 497120 99876 SZ 97120 99876
Rainfall Version	2022
Summer	☑
Winter	☑

Return Period

Return Period (years)	Increase Rainfall (%)
2.0	0.000
2.0	40.000
10.0	40.000
30.0	0.000
30.0	40.000
100.0	0.000
100.0	45.000

Storm Durations

Duration (mins)	Run Time (mins)
15	30
30	60
60	120
120	240
240	480
360	720
480	960
960	1920
1440	2880

Project:	Date:		
AEG11457 16 Sea Way, Middleton on Sea, West Sussex Proposed Network - Base Model	09/11/2026		
	Designed by: OH	Checked by: JA	Approved By: NB
Report Details: Type: Junctions Summary Storm Phase: Phase	Company Address: Aegaea Limited		

FEH: 2 years: Increase Rainfall (%): +0: Critical Storm Per Item: Rank By: Max. Depth

Junction	Storm Event	Cover Level (m)	Invert Level (m)	Max. Level (m)	Max. Depth (m)	Max. Inflow (L/s)	Max. Resident Volume (m³)	Max. Flooded Volume (m³)	Max. Outflow (L/s)	Total Discharge Volume (m³)	Status
RWP1	FEH: 2 years: +0 %: 120 mins: Summer	5.240	4.867	4.880	0.013	0.2	0.001	0.000	0.2	0.488	OK
S1	FEH: 2 years: +0 %: 120 mins: Summer	5.250	4.758	4.771	0.013	0.2	0.015	0.000	0.2	0.486	OK
CP	FEH: 2 years: +0 %: 15 mins: Summer	5.000	4.500	4.500	0.000	0.0	0.000	0.000	0.0	0.000	OK
CP1	FEH: 2 years: +0 %: 120 mins: Summer	5.090	4.301	4.317	0.016	0.2	0.019	0.000	0.2	0.482	OK
SW3	FEH: 2 years: +0 %: 120 mins: Summer	5.095	4.275	4.287	0.012	0.2	0.013	0.000	0.2	0.481	OK
SW2	FEH: 2 years: +0 %: 120 mins: Summer	5.004	4.117	4.128	0.011	0.2	0.013	0.000	0.2	0.479	OK
SW1	FEH: 2 years: +0 %: 120 mins: Summer	5.017	3.843	3.852	0.009	0.2	0.011	0.000	0.2	0.477	OK
CP2	FEH: 2 years: +0 %: 120 mins: Summer	5.005	3.562	3.571	0.009	0.2	0.000	0.000	0.2	0.477	OK
S2	FEH: 2 years: +0 %: 120 mins: Summer	5.012	4.474	4.485	0.011	0.2	0.005	0.000	0.2	0.485	OK
Junction	FEH: 2 years: +0 %: 120 mins: Summer	5.240	4.841	4.854	0.013	0.2	0.001	0.000	0.2	0.486	OK

Project:	Date:			
AEG11457 16 Sea Way, Middleton on Sea, West Sussex Proposed Network - Base Model	09/11/2026			aegaea water, civils and environment
	Designed by: OH	Checked by: JA	Approved By: NB	
Report Details: Type: Junctions Summary Storm Phase: Phase	Company Address: Aegaea Limited			

FEH: 2 years: Increase Rainfall (%): +40: Critical Storm Per Item: Rank By: Max. Depth

Junction	Storm Event	Cover Level (m)	Invert Level (m)	Max. Level (m)	Max. Depth (m)	Max. Inflow (L/s)	Max. Resident Volume (m³)	Max. Flooded Volume (m³)	Max. Outflow (L/s)	Total Discharge Volume (m³)	Status
RWP1	FEH: 2 years: +40 %: 120 mins: Summer	5.240	4.867	4.883	0.016	0.3	0.001	0.000	0.3	0.766	OK
S1	FEH: 2 years: +40 %: 120 mins: Summer	5.250	4.758	4.774	0.016	0.3	0.018	0.000	0.3	0.765	OK
CP	FEH: 2 years: +40 %: 15 mins: Summer	5.000	4.500	4.500	0.000	0.0	0.000	0.000	0.0	0.000	OK
CP1	FEH: 2 years: +40 %: 120 mins: Summer	5.090	4.301	4.321	0.020	0.3	0.022	0.000	0.3	0.760	OK
SW3	FEH: 2 years: +40 %: 120 mins: Summer	5.095	4.275	4.289	0.014	0.3	0.016	0.000	0.3	0.759	OK
SW2	FEH: 2 years: +40 %: 120 mins: Summer	5.004	4.117	4.131	0.014	0.3	0.016	0.000	0.3	0.757	OK
SW1	FEH: 2 years: +40 %: 120 mins: Summer	5.017	3.843	3.855	0.012	0.3	0.013	0.000	0.3	0.754	OK
CP2	FEH: 2 years: +40 %: 120 mins: Summer	5.005	3.562	3.573	0.011	0.3	0.000	0.000	0.3	0.754	OK
S2	FEH: 2 years: +40 %: 120 mins: Summer	5.012	4.474	4.487	0.013	0.3	0.006	0.000	0.3	0.763	OK
Junction	FEH: 2 years: +40 %: 120 mins: Summer	5.240	4.841	4.856	0.015	0.3	0.001	0.000	0.3	0.765	OK

Project:	Date:		
AEG11457 16 Sea Way, Middleton on Sea, West Sussex Proposed Network - Base Model	09/11/2026		
	Designed by: OH	Checked by: JA	Approved By: NB
Report Details: Type: Junctions Summary Storm Phase: Phase	Company Address: Aegaea Limited		

aegaea
water, civils and environment

FEH: 10 years: Increase Rainfall (%): +40: Critical Storm Per Item: Rank By: Max. Depth

Junction	Storm Event	Cover Level (m)	Invert Level (m)	Max. Level (m)	Max. Depth (m)	Max. Inflow (L/s)	Max. Resident Volume (m³)	Max. Flooded Volume (m³)	Max. Outflow (L/s)	Total Discharge Volume (m³)	Status
RWP1	FEH: 10 years: +40 %: 60 mins: Summer	5.240	4.867	4.888	0.021	0.5	0.001	0.000	0.5	1.029	OK
S1	FEH: 10 years: +40 %: 60 mins: Summer	5.250	4.758	4.778	0.020	0.5	0.023	0.000	0.5	1.021	OK
CP	FEH: 10 years: +40 %: 15 mins: Summer	5.000	4.500	4.500	0.000	0.0	0.000	0.000	0.0	0.000	OK
CP1	FEH: 10 years: +40 %: 60 mins: Summer	5.090	4.301	4.325	0.024	0.5	0.028	0.000	0.5	1.006	OK
SW3	FEH: 10 years: +40 %: 60 mins: Summer	5.095	4.275	4.293	0.018	0.5	0.020	0.000	0.5	1.000	OK
SW2	FEH: 10 years: +40 %: 60 mins: Summer	5.004	4.117	4.135	0.018	0.5	0.020	0.000	0.5	0.991	OK
SW1	FEH: 10 years: +40 %: 60 mins: Summer	5.017	3.843	3.858	0.015	0.5	0.017	0.000	0.5	0.982	OK
CP2	FEH: 10 years: +40 %: 60 mins: Summer	5.005	3.562	3.576	0.014	0.5	0.000	0.000	0.5	0.982	OK
S2	FEH: 10 years: +40 %: 60 mins: Summer	5.012	4.474	4.490	0.017	0.5	0.008	0.000	0.5	1.015	OK
Junction	FEH: 10 years: +40 %: 60 mins: Summer	5.240	4.841	4.861	0.020	0.5	0.001	0.000	0.5	1.025	OK

Project:	Date:		
AEG11457 16 Sea Way, Middleton on Sea, West Sussex Proposed Network - Base Model	09/11/2026		
	Designed by: OH	Checked by: JA	Approved By: NB
Report Details: Type: Junctions Summary Storm Phase: Phase	Company Address: Aegaea Limited		

FEH: 30 years: Increase Rainfall (%): +0: Critical Storm Per Item: Rank By: Max. Depth

Junction	Storm Event	Cover Level (m)	Invert Level (m)	Max. Level (m)	Max. Depth (m)	Max. Inflow (L/s)	Max. Resident Volume (m³)	Max. Flooded Volume (m³)	Max. Outflow (L/s)	Total Discharge Volume (m³)	Status
RWP1	FEH: 30 years: +0 %: 60 mins: Summer	5.240	4.867	4.887	0.020	0.5	0.001	0.000	0.5	0.978	OK
S1	FEH: 30 years: +0 %: 60 mins: Summer	5.250	4.758	4.778	0.020	0.5	0.022	0.000	0.5	0.970	OK
CP	FEH: 30 years: +0 %: 15 mins: Summer	5.000	4.500	4.500	0.000	0.0	0.000	0.000	0.0	0.000	OK
CP1	FEH: 30 years: +0 %: 60 mins: Summer	5.090	4.301	4.325	0.024	0.5	0.027	0.000	0.5	0.955	OK
SW3	FEH: 30 years: +0 %: 60 mins: Summer	5.095	4.275	4.292	0.017	0.5	0.019	0.000	0.5	0.949	OK
SW2	FEH: 30 years: +0 %: 60 mins: Summer	5.004	4.117	4.134	0.017	0.5	0.020	0.000	0.5	0.940	OK
SW1	FEH: 30 years: +0 %: 60 mins: Summer	5.017	3.843	3.857	0.014	0.5	0.016	0.000	0.5	0.931	OK
CP2	FEH: 30 years: +0 %: 60 mins: Summer	5.005	3.562	3.576	0.014	0.5	0.000	0.000	0.5	0.931	OK
S2	FEH: 30 years: +0 %: 60 mins: Summer	5.012	4.474	4.490	0.016	0.5	0.008	0.000	0.5	0.964	OK
Junction	FEH: 30 years: +0 %: 60 mins: Summer	5.240	4.841	4.860	0.019	0.5	0.001	0.000	0.5	0.974	OK

Project:	Date:			
AEG11457 16 Sea Way, Middleton on Sea, West Sussex Proposed Network - Base Model	09/11/2026			aegaea water, civils and environment
	Designed by: OH	Checked by: JA	Approved By: NB	
Report Details: Type: Junctions Summary Storm Phase: Phase	Company Address: Aegaea Limited			



FEH: 30 years: Increase Rainfall (%): +40: Critical Storm Per Item: Rank By: Max. Depth

Junction	Storm Event	Cover Level (m)	Invert Level (m)	Max. Level (m)	Max. Depth (m)	Max. Inflow (L/s)	Max. Resident Volume (m³)	Max. Flooded Volume (m³)	Max. Outflow (L/s)	Total Discharge Volume (m³)	Status
RWP1	FEH: 30 years: +40 %: 60 mins: Summer	5.240	4.867	4.891	0.024	0.7	0.002	0.000	0.7	1.515	OK
S1	FEH: 30 years: +40 %: 60 mins: Summer	5.250	4.758	4.781	0.023	0.7	0.026	0.000	0.7	1.506	OK
CP	FEH: 30 years: +40 %: 15 mins: Summer	5.000	4.500	4.500	0.000	0.0	0.000	0.000	0.0	0.000	OK
CP1	FEH: 30 years: +40 %: 60 mins: Summer	5.090	4.301	4.329	0.028	0.7	0.032	0.000	0.7	1.488	OK
SW3	FEH: 30 years: +40 %: 60 mins: Summer	5.095	4.275	4.295	0.020	0.7	0.023	0.000	0.7	1.481	OK
SW2	FEH: 30 years: +40 %: 60 mins: Summer	5.004	4.117	4.138	0.021	0.7	0.023	0.000	0.7	1.471	OK
SW1	FEH: 30 years: +40 %: 60 mins: Summer	5.017	3.843	3.860	0.017	0.7	0.019	0.000	0.7	1.460	OK
CP2	FEH: 30 years: +40 %: 60 mins: Summer	5.005	3.562	3.579	0.017	0.7	0.000	0.000	0.7	1.460	OK
S2	FEH: 30 years: +40 %: 60 mins: Summer	5.012	4.474	4.493	0.019	0.7	0.010	0.000	0.7	1.499	OK
Junction	FEH: 30 years: +40 %: 60 mins: Summer	5.240	4.841	4.864	0.023	0.7	0.002	0.000	0.7	1.511	OK

Project:	Date:		
AEG11457 16 Sea Way, Middleton on Sea, West Sussex Proposed Network - Base Model	09/11/2026		
	Designed by:	Checked by:	Approved By:
	OH	JA	NB
Report Details: Type: Junctions Summary Storm Phase: Phase	Company Address: Aegaea Limited		

aegaea
water, civils and environment

FEH: 100 years: Increase Rainfall (%): +0: Critical Storm Per Item: Rank By: Max. Depth

Junction	Storm Event	Cover Level (m)	Invert Level (m)	Max. Level (m)	Max. Depth (m)	Max. Inflow (L/s)	Max. Resident Volume (m³)	Max. Flooded Volume (m³)	Max. Outflow (L/s)	Total Discharge Volume (m³)	Status
RWP1	FEH: 100 years: +0 %: 60 mins: Summer	5.240	4.867	4.890	0.023	0.6	0.002	0.000	0.6	1.383	OK
S1	FEH: 100 years: +0 %: 60 mins: Summer	5.250	4.758	4.780	0.022	0.6	0.025	0.000	0.6	1.373	OK
CP	FEH: 100 years: +0 %: 15 mins: Summer	5.000	4.500	4.500	0.000	0.0	0.000	0.000	0.0	0.000	OK
CP1	FEH: 100 years: +0 %: 60 mins: Summer	5.090	4.301	4.328	0.027	0.6	0.031	0.000	0.6	1.356	OK
SW3	FEH: 100 years: +0 %: 60 mins: Summer	5.095	4.275	4.294	0.019	0.6	0.022	0.000	0.6	1.349	OK
SW2	FEH: 100 years: +0 %: 60 mins: Summer	5.004	4.117	4.137	0.020	0.6	0.022	0.000	0.6	1.339	OK
SW1	FEH: 100 years: +0 %: 60 mins: Summer	5.017	3.843	3.859	0.016	0.6	0.018	0.000	0.6	1.328	OK
CP2	FEH: 100 years: +0 %: 60 mins: Summer	5.005	3.562	3.578	0.016	0.6	0.000	0.000	0.6	1.328	OK
S2	FEH: 100 years: +0 %: 60 mins: Summer	5.012	4.474	4.492	0.018	0.6	0.009	0.000	0.6	1.367	OK
Junction	FEH: 100 years: +0 %: 60 mins: Summer	5.240	4.841	4.863	0.022	0.6	0.002	0.000	0.6	1.379	OK

Project:	Date:			
AEG11457 16 Sea Way, Middleton on Sea, West Sussex Proposed Network - Base Model	09/11/2026			aegaea water, civils and environment
	Designed by: OH	Checked by: JA	Approved By: NB	
Report Details: Type: Junctions Summary Storm Phase: Phase	Company Address: Aegaea Limited			



FEH: 100 years: Increase Rainfall (%): +45: Critical Storm Per Item: Rank By: Max. Depth

Junction	Storm Event	Cover Level (m)	Invert Level (m)	Max. Level (m)	Max. Depth (m)	Max. Inflow (L/s)	Max. Resident Volume (m³)	Max. Flooded Volume (m³)	Max. Outflow (L/s)	Total Discharge Volume (m³)	Status
RWP1	FEH: 100 years: +45 %: 60 mins: Summer	5.240	4.867	4.895	0.028	0.9	0.002	0.000	0.9	1.995	OK
S1	FEH: 100 years: +45 %: 60 mins: Summer	5.250	4.758	4.784	0.026	0.9	0.030	0.000	0.9	1.982	OK
CP	FEH: 100 years: +45 %: 15 mins: Summer	5.000	4.500	4.500	0.000	0.0	0.000	0.000	0.0	0.000	OK
CP1	FEH: 100 years: +45 %: 60 mins: Summer	5.090	4.301	4.333	0.032	0.9	0.036	0.000	0.9	1.961	OK
SW3	FEH: 100 years: +45 %: 60 mins: Summer	5.095	4.275	4.298	0.023	0.9	0.026	0.000	0.9	1.953	OK
SW2	FEH: 100 years: +45 %: 60 mins: Summer	5.004	4.117	4.141	0.024	0.9	0.027	0.000	0.9	1.941	OK
SW1	FEH: 100 years: +45 %: 60 mins: Summer	5.017	3.843	3.862	0.019	0.9	0.022	0.000	0.9	1.929	OK
CP2	FEH: 100 years: +45 %: 60 mins: Summer	5.005	3.562	3.581	0.019	0.9	0.000	0.000	0.9	1.929	OK
S2	FEH: 100 years: +45 %: 60 mins: Summer	5.012	4.474	4.496	0.022	0.9	0.011	0.000	0.9	1.974	OK
Junction	FEH: 100 years: +45 %: 60 mins: Summer	5.240	4.841	4.867	0.026	0.9	0.002	0.000	0.9	1.989	OK

Project:	Date:		
AEG11457 16 Sea Way, Middleton on Sea, West Sussex Proposed Network - Base Model	09/11/2026 Designed by: OH	Checked by: JA	Approved By: NB
Report Details: Type: Connections Summary Storm Phase: Phase	Company Address: Aegaea Limited		

FEH: 2 years: Increase Rainfall (%): +0: Critical Storm Per Item: Rank By: Max. Flow

Connection	Storm Event	Connection Type	From	To	Upstream Cover Level (m)	Max. US Water Level (m)	Max. Flow Depth (m)	Discharge Volume (m³)	Max. Velocity (m/s)	Flow / Capacity	Max. Flow (L/s)	Status
1.000	FEH: 2 years: +0 %: 15 mins: Summer	Pipe	CP	S2	5.000	4.500	0.000	0.000	0.0	0	0.0	OK
1.002	FEH: 2 years: +0 %: 120 mins: Summer	Pipe	CP1	SW3	5.090	4.317	0.014	0.482	0.2	0.02	0.2	OK
1.003	FEH: 2 years: +0 %: 120 mins: Summer	Pipe	SW3	SW2	5.095	4.287	0.011	0.481	0.4	0.01	0.2	OK
1.004	FEH: 2 years: +0 %: 120 mins: Summer	Pipe	SW2	SW1	5.004	4.128	0.010	0.479	0.4	0.01	0.2	OK
1.005	FEH: 2 years: +0 %: 120 mins: Summer	Pipe	SW1	CP2	5.017	3.852	0.009	0.477	0.4	0.01	0.2	OK
1.001	FEH: 2 years: +0 %: 120 mins: Summer	Pipe	S2	CP1	5.012	4.485	0.014	0.485	0.4	0.01	0.2	OK
2.000	FEH: 2 years: +0 %: 120 mins: Summer	Pipe	S1	S2	5.250	4.771	0.012	0.486	0.3	0.01	0.2	OK
3.000	FEH: 2 years: +0 %: 120 mins: Summer	Pipe	RWP1	Junction	5.240	4.880	0.013	0.488	0.4	0.04	0.2	OK
4.000	FEH: 2 years: +0 %: 120 mins: Summer	Pipe	Junction	S1	5.240	4.854	0.012	0.486	0.4	0.03	0.2	OK

Project:	Date:		
AEG11457 16 Sea Way, Middleton on Sea, West Sussex Proposed Network - Base Model	09/11/2026 Designed by: OH	Checked by: JA	Approved By: NB
Report Details: Type: Connections Summary Storm Phase: Phase	Company Address: Aegaea Limited		

FEH: 2 years: Increase Rainfall (%): +40: Critical Storm Per Item: Rank By: Max. Flow

Connection	Storm Event	Connection Type	From	To	Upstream Cover Level (m)	Max. US Water Level (m)	Max. Flow Depth (m)	Discharge Volume (m³)	Max. Velocity (m/s)	Flow / Capacity	Max. Flow (L/s)	Status
1.000	FEH: 2 years: +40 %: 15 mins: Summer	Pipe	CP	S2	5.000	4.500	0.004	0.000	0.0	0	0.0	OK
1.002	FEH: 2 years: +40 %: 120 mins: Summer	Pipe	CP1	SW3	5.090	4.321	0.017	0.760	0.3	0.03	0.3	OK
1.003	FEH: 2 years: +40 %: 120 mins: Summer	Pipe	SW3	SW2	5.095	4.289	0.014	0.759	0.4	0.02	0.3	OK
1.004	FEH: 2 years: +40 %: 120 mins: Summer	Pipe	SW2	SW1	5.004	4.131	0.013	0.757	0.4	0.02	0.3	OK
1.005	FEH: 2 years: +40 %: 120 mins: Summer	Pipe	SW1	CP2	5.017	3.855	0.011	0.754	0.5	0.01	0.3	OK
1.001	FEH: 2 years: +40 %: 120 mins: Summer	Pipe	S2	CP1	5.012	4.487	0.016	0.763	0.4	0.01	0.3	OK
2.000	FEH: 2 years: +40 %: 120 mins: Summer	Pipe	S1	S2	5.250	4.774	0.014	0.765	0.4	0.02	0.3	OK
3.000	FEH: 2 years: +40 %: 120 mins: Summer	Pipe	RWP1	Junction	5.240	4.883	0.015	0.766	0.4	0.05	0.3	OK
4.000	FEH: 2 years: +40 %: 120 mins: Summer	Pipe	Junction	S1	5.240	4.856	0.015	0.765	0.4	0.04	0.3	OK

Project:	Date:		
AEG11457 16 Sea Way, Middleton on Sea, West Sussex Proposed Network - Base Model	09/11/2026		
	Designed by: OH	Checked by: JA	Approved By: NB
Report Details: Type: Connections Summary Storm Phase: Phase	Company Address: Aegaea Limited		

aegaea
water, civils and environment

FEH: 10 years: Increase Rainfall (%): +40: Critical Storm Per Item: Rank By: Max. Flow

Connection	Storm Event	Connection Type	From	To	Upstream Cover Level (m)	Max. US Water Level (m)	Max. Flow Depth (m)	Discharge Volume (m³)	Max. Velocity (m/s)	Flow / Capacity	Max. Flow (L/s)	Status
1.000	FEH: 10 years: +40 %: 15 mins: Summer	Pipe	CP	S2	5.000	4.500	0.007	0.000	0.0	0	0.0	OK
1.002	FEH: 10 years: +40 %: 60 mins: Summer	Pipe	CP1	SW3	5.090	4.325	0.021	1.006	0.3	0.05	0.5	OK
1.003	FEH: 10 years: +40 %: 60 mins: Summer	Pipe	SW3	SW2	5.095	4.293	0.018	1.000	0.5	0.03	0.5	OK
1.004	FEH: 10 years: +40 %: 60 mins: Summer	Pipe	SW2	SW1	5.004	4.135	0.016	0.991	0.5	0.03	0.5	OK
1.005	FEH: 10 years: +40 %: 60 mins: Summer	Pipe	SW1	CP2	5.017	3.858	0.015	0.982	0.6	0.02	0.5	OK
1.001	FEH: 10 years: +40 %: 60 mins: Summer	Pipe	S2	CP1	5.012	4.490	0.020	1.015	0.4	0.03	0.5	OK
2.000	FEH: 10 years: +40 %: 60 mins: Summer	Pipe	S1	S2	5.250	4.778	0.018	1.021	0.4	0.04	0.5	OK
3.000	FEH: 10 years: +40 %: 60 mins: Summer	Pipe	RWP1	Junction	5.240	4.888	0.020	1.029	0.5	0.09	0.5	OK
4.000	FEH: 10 years: +40 %: 60 mins: Summer	Pipe	Junction	S1	5.240	4.861	0.019	1.025	0.5	0.08	0.5	OK

Project:	Date:		
AEG11457 16 Sea Way, Middleton on Sea, West Sussex Proposed Network - Base Model	09/11/2026 Designed by: OH	Checked by: JA	Approved By: NB
Report Details: Type: Connections Summary Storm Phase: Phase	Company Address: Aegaea Limited		

FEH: 30 years: Increase Rainfall (%): +0: Critical Storm Per Item: Rank By: Max. Flow

Connection	Storm Event	Connection Type	From	To	Upstream Cover Level (m)	Max. US Water Level (m)	Max. Flow Depth (m)	Discharge Volume (m³)	Max. Velocity (m/s)	Flow / Capacity	Max. Flow (L/s)	Status
1.000	FEH: 30 years: +0 %: 15 mins: Summer	Pipe	CP	S2	5.000	4.500	0.006	0.000	0.0	0	0.0	OK
1.002	FEH: 30 years: +0 %: 60 mins: Summer	Pipe	CP1	SW3	5.090	4.325	0.020	0.955	0.3	0.05	0.5	OK
1.003	FEH: 30 years: +0 %: 60 mins: Summer	Pipe	SW3	SW2	5.095	4.292	0.017	0.949	0.5	0.03	0.5	OK
1.004	FEH: 30 years: +0 %: 60 mins: Summer	Pipe	SW2	SW1	5.004	4.134	0.016	0.940	0.5	0.03	0.5	OK
1.005	FEH: 30 years: +0 %: 60 mins: Summer	Pipe	SW1	CP2	5.017	3.857	0.014	0.931	0.6	0.02	0.5	OK
1.001	FEH: 30 years: +0 %: 60 mins: Summer	Pipe	S2	CP1	5.012	4.490	0.020	0.964	0.4	0.02	0.5	OK
2.000	FEH: 30 years: +0 %: 60 mins: Summer	Pipe	S1	S2	5.250	4.778	0.018	0.970	0.4	0.03	0.5	OK
3.000	FEH: 30 years: +0 %: 60 mins: Summer	Pipe	RWP1	Junction	5.240	4.887	0.020	0.978	0.4	0.08	0.5	OK
4.000	FEH: 30 years: +0 %: 60 mins: Summer	Pipe	Junction	S1	5.240	4.860	0.019	0.974	0.5	0.07	0.5	OK

Project:	Date:		
AEG11457 16 Sea Way, Middleton on Sea, West Sussex Proposed Network - Base Model	09/11/2026		
	Designed by:	Checked by:	Approved By:
	OH	JA	NB
Report Details: Type: Connections Summary Storm Phase: Phase	Company Address: Aegaea Limited		

aegaea
water, civils and environment

FEH: 30 years: Increase Rainfall (%): +40: Critical Storm Per Item: Rank By: Max. Flow

Connection	Storm Event	Connection Type	From	To	Upstream Cover Level (m)	Max. US Water Level (m)	Max. Flow Depth (m)	Discharge Volume (m³)	Max. Velocity (m/s)	Flow / Capacity	Max. Flow (L/s)	Status
1.000	FEH: 30 years: +40 %: 15 mins: Summer	Pipe	CP	S2	5.000	4.500	0.008	0.000	0.0	0	0.0	OK
1.002	FEH: 30 years: +40 %: 60 mins: Summer	Pipe	CP1	SW3	5.090	4.329	0.024	1.488	0.4	0.07	0.7	OK
1.003	FEH: 30 years: +40 %: 60 mins: Summer	Pipe	SW3	SW2	5.095	4.295	0.021	1.481	0.5	0.04	0.7	OK
1.004	FEH: 30 years: +40 %: 60 mins: Summer	Pipe	SW2	SW1	5.004	4.138	0.019	1.471	0.5	0.04	0.7	OK
1.005	FEH: 30 years: +40 %: 60 mins: Summer	Pipe	SW1	CP2	5.017	3.860	0.017	1.460	0.6	0.03	0.7	OK
1.001	FEH: 30 years: +40 %: 60 mins: Summer	Pipe	S2	CP1	5.012	4.493	0.024	1.499	0.4	0.03	0.7	OK
2.000	FEH: 30 years: +40 %: 60 mins: Summer	Pipe	S1	S2	5.250	4.781	0.021	1.506	0.5	0.05	0.7	OK
3.000	FEH: 30 years: +40 %: 60 mins: Summer	Pipe	RWP1	Junction	5.240	4.891	0.024	1.515	0.5	0.11	0.7	OK
4.000	FEH: 30 years: +40 %: 60 mins: Summer	Pipe	Junction	S1	5.240	4.864	0.022	1.511	0.5	0.1	0.7	OK

Project:	Date:		
AEG11457 16 Sea Way, Middleton on Sea, West Sussex Proposed Network - Base Model	09/11/2026 Designed by: OH	Checked by: JA	Approved By: NB
Report Details: Type: Connections Summary Storm Phase: Phase	Company Address: Aegaea Limited		

FEH: 100 years: Increase Rainfall (%): +0: Critical Storm Per Item: Rank By: Max. Flow

Connection	Storm Event	Connection Type	From	To	Upstream Cover Level (m)	Max. US Water Level (m)	Max. Flow Depth (m)	Discharge Volume (m³)	Max. Velocity (m/s)	Flow / Capacity	Max. Flow (L/s)	Status
1.000	FEH: 100 years: +0 %: 15 mins: Summer	Pipe	CP	S2	5.000	4.500	0.008	0.000	0.0	0	0.0	OK
1.002	FEH: 100 years: +0 %: 60 mins: Summer	Pipe	CP1	SW3	5.090	4.328	0.023	1.356	0.4	0.07	0.6	OK
1.003	FEH: 100 years: +0 %: 60 mins: Summer	Pipe	SW3	SW2	5.095	4.294	0.020	1.349	0.5	0.04	0.6	OK
1.004	FEH: 100 years: +0 %: 60 mins: Summer	Pipe	SW2	SW1	5.004	4.137	0.018	1.339	0.5	0.03	0.6	OK
1.005	FEH: 100 years: +0 %: 60 mins: Summer	Pipe	SW1	CP2	5.017	3.859	0.016	1.328	0.6	0.02	0.6	OK
1.001	FEH: 100 years: +0 %: 60 mins: Summer	Pipe	S2	CP1	5.012	4.492	0.023	1.367	0.4	0.03	0.6	OK
2.000	FEH: 100 years: +0 %: 60 mins: Summer	Pipe	S1	S2	5.250	4.780	0.020	1.373	0.4	0.04	0.6	OK
3.000	FEH: 100 years: +0 %: 60 mins: Summer	Pipe	RWP1	Junction	5.240	4.890	0.022	1.383	0.5	0.1	0.6	OK
4.000	FEH: 100 years: +0 %: 60 mins: Summer	Pipe	Junction	S1	5.240	4.863	0.021	1.379	0.5	0.09	0.6	OK

Project:	Date:		
AEG11457 16 Sea Way, Middleton on Sea, West Sussex Proposed Network - Base Model	09/11/2026 Designed by: OH	Checked by: JA	Approved By: NB
Report Details: Type: Connections Summary Storm Phase: Phase	Company Address: Aegaea Limited		

FEH: 100 years: Increase Rainfall (%): +45: Critical Storm Per Item: Rank By: Max. Flow

Connection	Storm Event	Connection Type	From	To	Upstream Cover Level (m)	Max. US Water Level (m)	Max. Flow Depth (m)	Discharge Volume (m³)	Max. Velocity (m/s)	Flow / Capacity	Max. Flow (L/s)	Status
1.000	FEH: 100 years: +45 %: 15 mins: Summer	Pipe	CP	S2	5.000	4.500	0.009	0.000	0.0	0	0.0	OK
1.002	FEH: 100 years: +45 %: 60 mins: Summer	Pipe	CP1	SW3	5.090	4.333	0.028	1.961	0.4	0.1	0.9	OK
1.003	FEH: 100 years: +45 %: 60 mins: Summer	Pipe	SW3	SW2	5.095	4.298	0.024	1.953	0.5	0.05	0.9	OK
1.004	FEH: 100 years: +45 %: 60 mins: Summer	Pipe	SW2	SW1	5.004	4.141	0.022	1.941	0.6	0.05	0.9	OK
1.005	FEH: 100 years: +45 %: 60 mins: Summer	Pipe	SW1	CP2	5.017	3.862	0.019	1.929	0.7	0.03	0.9	OK
1.001	FEH: 100 years: +45 %: 60 mins: Summer	Pipe	S2	CP1	5.012	4.496	0.027	1.974	0.4	0.04	0.9	OK
2.000	FEH: 100 years: +45 %: 60 mins: Summer	Pipe	S1	S2	5.250	4.784	0.024	1.982	0.5	0.06	0.9	OK
3.000	FEH: 100 years: +45 %: 60 mins: Summer	Pipe	RWP1	Junction	5.240	4.895	0.027	1.995	0.5	0.15	0.9	OK
4.000	FEH: 100 years: +45 %: 60 mins: Summer	Pipe	Junction	S1	5.240	4.867	0.025	1.989	0.6	0.13	0.9	OK

Project:	Date:		
AEG11457 16 Sea Way, Middleton on Sea, West Sussex Proposed Network - 50mm Orifice Sensitivtiy Test		Designed by: OH	Checked by: JA	Approved By: NDD
Report Details: Type: Inflows Storm Phase: Phase	Company Address: Aegaea Limited		



Green Roof Area

Type : Catchment Area

Area (ha)	0.004

Dynamic Sizing

Runoff Method	Green Roof
Summer Volumetric Runoff Coefficient	1.000
Winter Volumetric Runoff Coefficient	1.000
Depression Storage (mm)	8
Evapotranspiration (mm/day)	3.0
Decay Coefficiency	0.050
Time Delay (mins)	120

Project:	Date:		
AEG11457 16 Sea Way, Middleton on Sea, West Sussex Proposed Network - 50mm Orifice Sensitivtiy Test	05/11/2026 Designed by: OH	Checked by: JA	Approved By: NDD
Report Details: Type: Junctions Storm Phase: Phase	Company Address: Aegaea Limited		

aegaea
water, civils and environment

Name	Junction Type	Easting (m)	Northing (m)	Cover Level (m)	Depth (m)	Invert Level (m)	Chamber Shape	Diameter (m)
IC1	Manhole	655.804	-342.223	5.240	0.440	4.800	Circular	0.300
S1	Manhole	654.661	-345.523	5.250	0.492	4.758	Circular	1.200
CP	Manhole	612.346	-350.752	5.000	0.500	4.500	Circular	1.200
CP1	Manhole	615.263	-365.395	5.090	0.789	4.301	Circular	1.200
SW3	Manhole	618.355	-373.799	5.095	0.820	4.275	Circular	1.200
SW2	Manhole	623.597	-388.931	5.004	0.887	4.117	Circular	1.200
SW1	Manhole	632.278	-413.691	5.017	1.174	3.843	Circular	1.200
CP2	Manhole	637.029	-426.366	5.005	1.443	3.562	Circular	1.200
S2	Manhole	612.728	-352.670	5.012	0.538	4.474	Circular	0.800

Name	Lock
IC1	None
S1	None
CP	None
CP1	None
SW3	None
SW2	None
SW1	None
CP2	None
S2	None

Inlets

Junction	Inlet Name	Incoming Item(s)	Bypass Destination	Capacity Type
IC1	Inlet	Green Roof Area	(None)	No Restriction
S1	Inlet	3.000	(None)	No Restriction
CP1	Inlet	1.001	(None)	No Restriction
SW3	Inlet	1.002	(None)	No Restriction
SW2	Inlet	1.003	(None)	No Restriction
SW1	Inlet	1.004	(None)	No Restriction
CP2	Inlet	1.005	(None)	No Restriction
S2	Inlet	1.000	(None)	No Restriction
	Inlet (1)	2.000	(None)	No Restriction

Outlets

Junction	Outlet Name	Outgoing Connection	Outlet Type
IC1	Outlet	3.000	Orifice
	Diameter (m)	0.050	
	Coefficient of Discharge	0.600	
	Invert Level (m)	4.800	
S1	Outlet	2.000	Free Discharge
CP	Outlet	1.000	Free Discharge
CP1	Outlet	1.002	Free Discharge
SW3	Outlet	1.003	Free Discharge
SW2	Outlet	1.004	Free Discharge
SW1	Outlet	1.005	Free Discharge
S2	Outlet	1.001	Free Discharge

Project:	Date:		
AEG11457 16 Sea Way, Middleton on Sea, West Sussex Proposed Network - 50mm Orifice Sensitivtiy Test	05/11/2026 Designed by: OH	Checked by: JA	Approved By: NDD
Report Details: Type: Connections Storm Phase: Phase	Company Address: Aegaea Limited		

Name	Length (m)	Connection Type	Slope (1:X)	Manning's n	Colebrook-White Roughness (mm)	Diameter / Base Width (mm)	Upstream Cover Level (m)	Upstream Invert Level (m)
1.002	8.955	Pipe	344.407		0.6	150	5.090	4.301
1.003	16.015	Pipe	101.359		0.6	150	5.095	4.275
1.004	26.237	Pipe	95.756		0.6	150	5.004	4.117
1.005	13.537	Pipe	48.173		0.6	150	5.017	3.843
1.000	1.956	Pipe	75.026		0.6	150	5.000	4.500
1.001	12.975	Pipe	75.026		0.6	150	5.012	4.474
2.000	42.538	Pipe	149.748		0.6	150	5.250	4.758
3.000	3.492	Pipe	83.137		0.6	100	5.240	4.800

Name	Downstream Cover Level (m)	Downstream Invert Level (m)	Part Family	Lock	Flow Restriction (L/s)	Culvert Type	Culvert Entrance	Wall Thickness (mm)
1.002	5.095	4.275		None		(None)	(None)	0
1.003	5.004	4.117		None		(None)	(None)	0
1.004	5.017	3.843		None		(None)	(None)	0
1.005	5.005	3.562		None		(None)	(None)	0
1.000	5.012	4.474		None		(None)	(None)	0
1.001	5.090	4.301		None		(None)	(None)	0
2.000	5.012	4.474		None		(None)	(None)	0
3.000	5.250	4.758		None	3.4	(None)	(None)	0

Name	Material	Trench Width (mm)	Bedding Material	Surrounding Material
1.002		0		
1.003		0		
1.004		0		
1.005		0		
1.000		0		
1.001		0		
2.000		0		
3.000		0		

Project:	Date:		
AEG11457 16 Sea Way, Middleton on Sea, West Sussex Proposed Network - 50mm Orifice Sensitivtiy Test	05/11/2026		
	Designed by:	Checked by:	Approved By:
	OH	JA	NDD
Report Details: Type: Inflow Summary Storm Phase: Phase	Company Address: Aegaea Limited		

aegaea
water, civils and environment

Inflow Label	Connected To	Flow (L/s)	Runoff Method	Area (ha)	Percentage Impervious (%)	Urban Creep (%)	Adjusted Percentage Impervious (%)	Area Analysed (ha)
Green Roof Area	IC1		Green Roof	0.004		0		0.004
TOTAL		**0.0**		**0.004**				**0.004**

Flow Options

Peak Flow Calculation	(UK) Modified Rational Method
Min. Time of Entry (mins)	5
Max. Travel Time (mins)	30

Pipe Options

Lock Slope Options	None
Design Options	Minimise Excavation
Design Level	Level Soffits
Min. Cover Depth (m)	1.200
Min. Slope (1:X)	500.00
Max. Slope (1:X)	40.00
Min. Velocity (m/s)	1.0
Max. Velocity (m/s)	3.0
Use Flow Restriction	☐
Reduce Channel Depths	☐

Pipe Size Library

Default

Add. Increment (mm)	75
Max. Diameter (mm)	0

Diameter (mm)	Min. Slope (1:X)	Max. Slope (1:X)
100	0.00	0.00
150	0.00	0.00

Manhole Options

Apply Offset	☐

Manhole Size Library

Default

Diameter / Width

Connection (mm)	Diameter / Length (m)	Width (m)
0	1.200	0.000
375	1.350	0.000
500	1.500	0.000
750	1.800	0.000

Additional Sizing

Connection (mm)	900
Diameter / Length (m)	0.900
Width (m)	0.000

Depth

Depth (m)	Diameter / Length (m)	Width (m)
0.000	1.050	0.000
1.500	1.200	0.000

Access

Depth (m)	Ladder Protrusion (mm)
0.000	130
3.000	230

Benching Requirements

Landing Width (mm)	500
Benching Width (mm)	225

Runoff Type	Dynamic
Output Interval (mins)	5
Time Step	Default
Urban Creep	Apply Global Value
Urban Creep Global Value (%)	0
Junction Flood Risk Margin (mm)	300
Perform No Discharge Analysis	☐

Rainfall

FEH

Type: FEH

Site Location	GB 497120 99876 SZ 97120 99876
Rainfall Version	2022
Summer	☑
Winter	☑

Return Period

Return Period (years)	Increase Rainfall (%)
2.0	0.000
30.0	0.000
30.0	40.000
100.0	0.000
100.0	45.000

Storm Durations

Duration (mins)	Run Time (mins)
15	30
30	60
60	120
120	240
240	480
360	720
480	960
960	1920
1440	2880

Project:	Date:		
AEG11457 16 Sea Way, Middleton on Sea, West Sussex Proposed Network - 50mm Orifice Sensitivtiy Test	05/11/2026		
	Designed by: OH	Checked by: JA	Approved By: NDD
Report Details: Type: Junctions Summary Storm Phase: Phase	Company Address: Aegaea Limited		

FEH: 2 years: Increase Rainfall (%): +0: Critical Storm Per Item: Rank By: Max. Depth

Junction	Storm Event	Cover Level (m)	Invert Level (m)	Max. Level (m)	Max. Depth (m)	Max. Inflow (L/s)	Max. Resident Volume (m³)	Max. Flooded Volume (m³)	Max. Outflow (L/s)	Total Discharge Volume (m³)	Status
IC1	FEH: 2 years: +0 %: 120 mins: Summer	5.240	4.800	4.823	0.023	0.2	0.002	0.000	0.2	0.487	OK
S1	FEH: 2 years: +0 %: 120 mins: Summer	5.250	4.758	4.771	0.013	0.2	0.015	0.000	0.2	0.484	OK
CP	FEH: 2 years: +0 %: 15 mins: Summer	5.000	4.500	4.500	0.000	0.0	0.000	0.000	0.0	0.000	OK
CP1	FEH: 2 years: +0 %: 120 mins: Summer	5.090	4.301	4.317	0.016	0.2	0.018	0.000	0.2	0.479	OK
SW3	FEH: 2 years: +0 %: 120 mins: Summer	5.095	4.275	4.286	0.011	0.2	0.013	0.000	0.2	0.478	OK
SW2	FEH: 2 years: +0 %: 120 mins: Summer	5.004	4.117	4.129	0.012	0.2	0.013	0.000	0.2	0.476	OK
SW1	FEH: 2 years: +0 %: 120 mins: Summer	5.017	3.843	3.852	0.009	0.2	0.010	0.000	0.2	0.474	OK
CP2	FEH: 2 years: +0 %: 120 mins: Summer	5.005	3.562	3.571	0.009	0.2	0.000	0.000	0.2	0.474	OK
S2	FEH: 2 years: +0 %: 120 mins: Summer	5.012	4.474	4.485	0.011	0.2	0.005	0.000	0.2	0.483	OK

Project:	Date:		
AEG11457 16 Sea Way, Middleton on Sea, West Sussex Proposed Network - 50mm Orifice Sensitivtiy Test	05/11/2026		
	Designed by: OH	Checked by: JA	Approved By: NDD
Report Details: Type: Junctions Summary Storm Phase: Phase	Company Address: Aegaea Limited		

FEH: 30 years: Increase Rainfall (%): +0: Critical Storm Per Item: Rank By: Max. Depth

Junction	Storm Event	Cover Level (m)	Invert Level (m)	Max. Level (m)	Max. Depth (m)	Max. Inflow (L/s)	Max. Resident Volume (m³)	Max. Flooded Volume (m³)	Max. Outflow (L/s)	Total Discharge Volume (m³)	Status
IC1	FEH: 30 years: +0 %: 60 mins: Summer	5.240	4.800	4.839	0.039	0.5	0.003	0.000	0.5	0.975	OK
S1	FEH: 30 years: +0 %: 60 mins: Summer	5.250	4.758	4.778	0.020	0.5	0.022	0.000	0.5	0.964	OK
CP	FEH: 30 years: +0 %: 15 mins: Summer	5.000	4.500	4.500	0.000	0.0	0.000	0.000	0.0	0.000	OK
CP1	FEH: 30 years: +0 %: 60 mins: Summer	5.090	4.301	4.325	0.024	0.5	0.027	0.000	0.5	0.949	OK
SW3	FEH: 30 years: +0 %: 60 mins: Summer	5.095	4.275	4.292	0.017	0.5	0.019	0.000	0.5	0.943	OK
SW2	FEH: 30 years: +0 %: 60 mins: Summer	5.004	4.117	4.135	0.018	0.5	0.020	0.000	0.5	0.934	OK
SW1	FEH: 30 years: +0 %: 60 mins: Summer	5.017	3.843	3.857	0.014	0.5	0.016	0.000	0.4	0.924	OK
CP2	FEH: 30 years: +0 %: 60 mins: Summer	5.005	3.562	3.576	0.014	0.4	0.000	0.000	0.4	0.924	OK
S2	FEH: 30 years: +0 %: 60 mins: Summer	5.012	4.474	4.490	0.016	0.5	0.008	0.000	0.5	0.958	OK

Project:	Date:		
AEG11457 16 Sea Way, Middleton on Sea, West Sussex Proposed Network - 50mm Orifice Sensitivtiy Test	05/11/2026		
	Designed by: OH	Checked by: JA	Approved By: NDD
Report Details: Type: Junctions Summary Storm Phase: Phase	Company Address: Aegaea Limited		

FEH: 30 years: Increase Rainfall (%): +40: Critical Storm Per Item: Rank By: Max. Depth

Junction	Storm Event	Cover Level (m)	Invert Level (m)	Max. Level (m)	Max. Depth (m)	Max. Inflow (L/s)	Max. Resident Volume (m³)	Max. Flooded Volume (m³)	Max. Outflow (L/s)	Total Discharge Volume (m³)	Status
IC1	FEH: 30 years: +40 %: 60 mins: Summer	5.240	4.800	4.849	0.049	0.7	0.003	0.000	0.7	1.512	OK
S1	FEH: 30 years: +40 %: 60 mins: Summer	5.250	4.758	4.781	0.023	0.7	0.026	0.000	0.7	1.499	OK
CP	FEH: 30 years: +40 %: 15 mins: Summer	5.000	4.500	4.500	0.000	0.0	0.000	0.000	0.0	0.000	OK
CP1	FEH: 30 years: +40 %: 60 mins: Summer	5.090	4.301	4.329	0.028	0.7	0.032	0.000	0.7	1.482	OK
SW3	FEH: 30 years: +40 %: 60 mins: Summer	5.095	4.275	4.295	0.020	0.7	0.023	0.000	0.7	1.474	OK
SW2	FEH: 30 years: +40 %: 60 mins: Summer	5.004	4.117	4.138	0.021	0.7	0.023	0.000	0.7	1.463	OK
SW1	FEH: 30 years: +40 %: 60 mins: Summer	5.017	3.843	3.860	0.017	0.7	0.019	0.000	0.7	1.452	OK
CP2	FEH: 30 years: +40 %: 60 mins: Summer	5.005	3.562	3.579	0.017	0.7	0.000	0.000	0.7	1.452	OK
S2	FEH: 30 years: +40 %: 60 mins: Summer	5.012	4.474	4.493	0.019	0.7	0.010	0.000	0.7	1.493	OK

Project:	Date:		
AEG11457 16 Sea Way, Middleton on Sea, West Sussex Proposed Network - 50mm Orifice Sensitivtiy Test	05/11/2026		
	Designed by: OH	Checked by: JA	Approved By: NDD
Report Details: Type: Junctions Summary Storm Phase: Phase	Company Address: Aegaea Limited		

FEH: 100 years: Increase Rainfall (%): +0: Critical Storm Per Item: Rank By: Max. Depth

Junction	Storm Event	Cover Level (m)	Invert Level (m)	Max. Level (m)	Max. Depth (m)	Max. Inflow (L/s)	Max. Resident Volume (m³)	Max. Flooded Volume (m³)	Max. Outflow (L/s)	Total Discharge Volume (m³)	Status
IC1	FEH: 100 years: +0 %: 60 mins: Summer	5.240	4.800	4.846	0.046	0.6	0.003	0.000	0.6	1.381	OK
S1	FEH: 100 years: +0 %: 60 mins: Summer	5.250	4.758	4.780	0.022	0.6	0.025	0.000	0.6	1.367	OK
CP	FEH: 100 years: +0 %: 15 mins: Summer	5.000	4.500	4.500	0.000	0.0	0.000	0.000	0.0	0.000	OK
CP1	FEH: 100 years: +0 %: 60 mins: Summer	5.090	4.301	4.328	0.027	0.6	0.031	0.000	0.6	1.350	OK
SW3	FEH: 100 years: +0 %: 60 mins: Summer	5.095	4.275	4.294	0.019	0.6	0.022	0.000	0.6	1.342	OK
SW2	FEH: 100 years: +0 %: 60 mins: Summer	5.004	4.117	4.137	0.020	0.6	0.022	0.000	0.6	1.332	OK
SW1	FEH: 100 years: +0 %: 60 mins: Summer	5.017	3.843	3.859	0.016	0.6	0.018	0.000	0.6	1.321	OK
CP2	FEH: 100 years: +0 %: 60 mins: Summer	5.005	3.562	3.578	0.016	0.6	0.000	0.000	0.6	1.321	OK
S2	FEH: 100 years: +0 %: 60 mins: Summer	5.012	4.474	4.492	0.018	0.6	0.009	0.000	0.6	1.361	OK

Project:	Date:		
AEG11457 16 Sea Way, Middleton on Sea, West Sussex Proposed Network - 50mm Orifice Sensitivtiy Test	05/11/2026 Designed by: OH	Checked by: JA	Approved By: NDD
Report Details: Type: Junctions Summary Storm Phase: Phase	Company Address: Aegaea Limited		

FEH: 100 years: Increase Rainfall (%): +45: Critical Storm Per Item: Rank By: Max. Depth

Junction	Storm Event	Cover Level (m)	Invert Level (m)	Max. Level (m)	Max. Depth (m)	Max. Inflow (L/s)	Max. Resident Volume (m³)	Max. Flooded Volume (m³)	Max. Outflow (L/s)	Total Discharge Volume (m³)	Status
IC1	FEH: 100 years: +45 %: 60 mins: Summer	5.240	4.800	4.856	0.056	0.9	0.004	0.000	0.9	1.991	OK
S1	FEH: 100 years: +45 %: 60 mins: Summer	5.250	4.758	4.784	0.026	0.9	0.030	0.000	0.9	1.975	OK
CP	FEH: 100 years: +45 %: 15 mins: Summer	5.000	4.500	4.500	0.000	0.0	0.000	0.000	0.0	0.000	OK
CP1	FEH: 100 years: +45 %: 60 mins: Summer	5.090	4.301	4.333	0.032	0.9	0.036	0.000	0.9	1.954	OK
SW3	FEH: 100 years: +45 %: 60 mins: Summer	5.095	4.275	4.298	0.023	0.9	0.026	0.000	0.9	1.945	OK
SW2	FEH: 100 years: +45 %: 60 mins: Summer	5.004	4.117	4.140	0.023	0.9	0.026	0.000	0.9	1.933	OK
SW1	FEH: 100 years: +45 %: 60 mins: Summer	5.017	3.843	3.862	0.019	0.9	0.022	0.000	0.9	1.921	OK
CP2	FEH: 100 years: +45 %: 60 mins: Summer	5.005	3.562	3.581	0.019	0.9	0.000	0.000	0.9	1.921	OK
S2	FEH: 100 years: +45 %: 60 mins: Summer	5.012	4.474	4.495	0.022	0.9	0.011	0.000	0.9	1.967	OK

Project:	Date:		
AEG11457 16 Sea Way, Middleton on Sea, West Sussex Proposed Network - 50mm Orifice Sensitivtiy Test	05/11/2026		
	Designed by:	Checked by:	Approved By:
	OH	JA	NDD
Report Details: Type: Connections Summary Storm Phase: Phase	Company Address: Aegaea Limited		

FEH: 2 years: Increase Rainfall (%): +0: Critical Storm Per Item: Rank By: Max. Flow

Connection	Storm Event	Connection Type	From	To	Upstream Cover Level (m)	Max. US Water Level (m)	Max. Flow Depth (m)	Discharge Volume (m³)	Max. Velocity (m/s)	Flow / Capacity	Max. Flow (L/s)	Status
1.000	FEH: 2 years: +0 %: 15 mins: Summer	Pipe	CP	S2	5.000	4.500	0.000	0.000	0.0	0	0.0	OK
1.002	FEH: 2 years: +0 %: 120 mins: Summer	Pipe	CP1	SW3	5.090	4.317	0.014	0.479	0.2	0.02	0.2	OK
1.003	FEH: 2 years: +0 %: 120 mins: Summer	Pipe	SW3	SW2	5.095	4.286	0.011	0.478	0.4	0.01	0.2	OK
1.004	FEH: 2 years: +0 %: 120 mins: Summer	Pipe	SW2	SW1	5.004	4.129	0.010	0.476	0.4	0.01	0.2	OK
1.005	FEH: 2 years: +0 %: 120 mins: Summer	Pipe	SW1	CP2	5.017	3.852	0.009	0.474	0.4	0.01	0.2	OK
1.001	FEH: 2 years: +0 %: 120 mins: Summer	Pipe	S2	CP1	5.012	4.485	0.013	0.483	0.4	0.01	0.2	OK
2.000	FEH: 2 years: +0 %: 120 mins: Summer	Pipe	S1	S2	5.250	4.771	0.012	0.484	0.3	0.01	0.2	OK
3.000	FEH: 2 years: +0 %: 120 mins: Summer	Pipe	IC1	S1	5.240	4.823	0.013	0.484	0.4	0.03	0.2	OK

Project:	Date:		
AEG11457 16 Sea Way, Middleton on Sea, West Sussex Proposed Network - 50mm Orifice Sensitivtiy Test	05/11/2026		
	Designed by:	Checked by:	Approved By:
	OH	JA	NDD
Report Details: Type: Connections Summary Storm Phase: Phase	Company Address: Aegaea Limited		

FEH: 30 years: Increase Rainfall (%): +0: Critical Storm Per Item: Rank By: Max. Flow

Connection	Storm Event	Connection Type	From	To	Upstream Cover Level (m)	Max. US Water Level (m)	Max. Flow Depth (m)	Discharge Volume (m³)	Max. Velocity (m/s)	Flow / Capacity	Max. Flow (L/s)	Status
1.000	FEH: 30 years: +0 %: 15 mins: Summer	Pipe	CP	S2	5.000	4.500	0.006	0.000	0.0	0	0.0	OK
1.002	FEH: 30 years: +0 %: 60 mins: Summer	Pipe	CP1	SW3	5.090	4.325	0.021	0.949	0.4	0.05	0.5	OK
1.003	FEH: 30 years: +0 %: 60 mins: Summer	Pipe	SW3	SW2	5.095	4.292	0.017	0.943	0.4	0.03	0.5	OK
1.004	FEH: 30 years: +0 %: 60 mins: Summer	Pipe	SW2	SW1	5.004	4.135	0.016	0.934	0.5	0.03	0.5	OK
1.005	FEH: 30 years: +0 %: 60 mins: Summer	Pipe	SW1	CP2	5.017	3.857	0.014	0.924	0.5	0.02	0.4	OK
1.001	FEH: 30 years: +0 %: 60 mins: Summer	Pipe	S2	CP1	5.012	4.490	0.020	0.958	0.4	0.02	0.5	OK
2.000	FEH: 30 years: +0 %: 60 mins: Summer	Pipe	S1	S2	5.250	4.778	0.018	0.964	0.4	0.03	0.5	OK
3.000	FEH: 30 years: +0 %: 60 mins: Summer	Pipe	IC1	S1	5.240	4.839	0.019	0.969	0.6	0.07	0.5	OK

Project:	Date:		
AEG11457 16 Sea Way, Middleton on Sea, West Sussex Proposed Network - 50mm Orifice Sensitivtiy Test	05/11/2026		
	Designed by:	Checked by:	Approved By:
	OH	JA	NDD
Report Details: Type: Connections Summary Storm Phase: Phase	Company Address: Aegaea Limited		

FEH: 30 years: Increase Rainfall (%): +40: Critical Storm Per Item: Rank By: Max. Flow

Connection	Storm Event	Connection Type	From	To	Upstream Cover Level (m)	Max. US Water Level (m)	Max. Flow Depth (m)	Discharge Volume (m³)	Max. Velocity (m/s)	Flow / Capacity	Max. Flow (L/s)	Status
1.000	FEH: 30 years: +40 %: 15 mins: Summer	Pipe	CP	S2	5.000	4.500	0.008	0.000	0.0	0	0.0	OK
1.002	FEH: 30 years: +40 %: 60 mins: Summer	Pipe	CP1	SW3	5.090	4.329	0.024	1.482	0.4	0.07	0.7	OK
1.003	FEH: 30 years: +40 %: 60 mins: Summer	Pipe	SW3	SW2	5.095	4.295	0.020	1.474	0.5	0.04	0.7	OK
1.004	FEH: 30 years: +40 %: 60 mins: Summer	Pipe	SW2	SW1	5.004	4.138	0.019	1.463	0.5	0.04	0.7	OK
1.005	FEH: 30 years: +40 %: 60 mins: Summer	Pipe	SW1	CP2	5.017	3.860	0.017	1.452	0.6	0.03	0.7	OK
1.001	FEH: 30 years: +40 %: 60 mins: Summer	Pipe	S2	CP1	5.012	4.493	0.024	1.493	0.4	0.03	0.7	OK
2.000	FEH: 30 years: +40 %: 60 mins: Summer	Pipe	S1	S2	5.250	4.781	0.021	1.499	0.5	0.05	0.7	OK
3.000	FEH: 30 years: +40 %: 60 mins: Summer	Pipe	IC1	S1	5.240	4.849	0.023	1.506	0.6	0.1	0.7	OK

Project:	Date:		
AEG11457 16 Sea Way, Middleton on Sea, West Sussex Proposed Network - 50mm Orifice Sensitivtiy Test	05/11/2026		
	Designed by:	Checked by:	Approved By:
	OH	JA	NDD
Report Details: Type: Connections Summary Storm Phase: Phase	Company Address: Aegaea Limited		

aegaea
water, civils and environment

FEH: 100 years: Increase Rainfall (%): +0: Critical Storm Per Item: Rank By: Max. Flow

Connection	Storm Event	Connection Type	From	To	Upstream Cover Level (m)	Max. US Water Level (m)	Max. Flow Depth (m)	Discharge Volume (m³)	Max. Velocity (m/s)	Flow / Capacity	Max. Flow (L/s)	Status
1.000	FEH: 100 years: +0 %: 15 mins: Summer	Pipe	CP	S2	5.000	4.500	0.008	0.000	0.0	0	0.0	OK
1.002	FEH: 100 years: +0 %: 60 mins: Summer	Pipe	CP1	SW3	5.090	4.328	0.023	1.350	0.4	0.07	0.6	OK
1.003	FEH: 100 years: +0 %: 60 mins: Summer	Pipe	SW3	SW2	5.095	4.294	0.019	1.342	0.5	0.03	0.6	OK
1.004	FEH: 100 years: +0 %: 60 mins: Summer	Pipe	SW2	SW1	5.004	4.137	0.018	1.332	0.5	0.03	0.6	OK
1.005	FEH: 100 years: +0 %: 60 mins: Summer	Pipe	SW1	CP2	5.017	3.859	0.016	1.321	0.6	0.02	0.6	OK
1.001	FEH: 100 years: +0 %: 60 mins: Summer	Pipe	S2	CP1	5.012	4.492	0.023	1.361	0.4	0.03	0.6	OK
2.000	FEH: 100 years: +0 %: 60 mins: Summer	Pipe	S1	S2	5.250	4.780	0.020	1.367	0.4	0.04	0.6	OK
3.000	FEH: 100 years: +0 %: 60 mins: Summer	Pipe	IC1	S1	5.240	4.846	0.022	1.374	0.5	0.09	0.6	OK

Project:	Date:		
AEG11457 16 Sea Way, Middleton on Sea, West Sussex Proposed Network - 50mm Orifice Sensitivtiy Test	05/11/2026		
	Designed by: OH	Checked by: JA	Approved By: NDD
Report Details: Type: Connections Summary Storm Phase: Phase	Company Address: Aegaea Limited		

FEH: 100 years: Increase Rainfall (%): +45: Critical Storm Per Item: Rank By: Max. Flow

Connection	Storm Event	Connection Type	From	To	Upstream Cover Level (m)	Max. US Water Level (m)	Max. Flow Depth (m)	Discharge Volume (m³)	Max. Velocity (m/s)	Flow / Capacity	Max. Flow (L/s)	Status
1.000	FEH: 100 years: +45 %: 15 mins: Summer	Pipe	CP	S2	5.000	4.500	0.009	0.000	0.0	0	0.0	OK
1.002	FEH: 100 years: +45 %: 60 mins: Summer	Pipe	CP1	SW3	5.090	4.333	0.028	1.954	0.4	0.09	0.9	OK
1.003	FEH: 100 years: +45 %: 60 mins: Summer	Pipe	SW3	SW2	5.095	4.298	0.023	1.945	0.6	0.05	0.9	OK
1.004	FEH: 100 years: +45 %: 60 mins: Summer	Pipe	SW2	SW1	5.004	4.140	0.021	1.933	0.6	0.05	0.9	OK
1.005	FEH: 100 years: +45 %: 60 mins: Summer	Pipe	SW1	CP2	5.017	3.862	0.019	1.921	0.7	0.03	0.9	OK
1.001	FEH: 100 years: +45 %: 60 mins: Summer	Pipe	S2	CP1	5.012	4.495	0.027	1.967	0.4	0.04	0.9	OK
2.000	FEH: 100 years: +45 %: 60 mins: Summer	Pipe	S1	S2	5.250	4.784	0.024	1.975	0.5	0.06	0.9	OK
3.000	FEH: 100 years: +45 %: 60 mins: Summer	Pipe	IC1	S1	5.240	4.856	0.026	1.984	0.6	0.14	0.9	OK

Project:	Date:		
AEG11457 16 Sea Way, Middleton on Sea, West Sussex Proposed Network - Surcharged Outfall	05/11/2026 Designed by: OH	Checked by: JA	Approved By: NB
Report Details: Type: Inflows Storm Phase: Phase	Company Address: Aegaea Limited		

aegaea
water, civils and environment



Green Roof Area

Type : Catchment Area

Area (ha)	0.004

Dynamic Sizing

Runoff Method	Green Roof
Summer Volumetric Runoff Coefficient	1.000
Winter Volumetric Runoff Coefficient	1.000
Depression Storage (mm)	8
Evapotranspiration (mm/day)	3.0
Decay Coefficiency	0.050
Time Delay (mins)	120

Project:	Date:		
AEG11457 16 Sea Way, Middleton on Sea, West Sussex Proposed Network - Surcharged Outfall	05/11/2026 Designed by: OH	Checked by: JA	Approved By: NB
Report Details: Type: Junctions Storm Phase: Phase	Company Address: Aegaea Limited		

aegaea
water, civils and environment

Name	Junction Type	Easting (m)	Northing (m)	Cover Level (m)	Depth (m)	Invert Level (m)	Chamber Shape	Diameter (m)
RWP1	Manhole	652.273	-341.042	5.240	0.373	4.867	Circular	0.300
S1	Manhole	654.661	-345.523	5.250	0.492	4.758	Circular	1.200
S2	Manhole	612.643	-352.643	5.012	0.538	4.474	Circular	1.200
Junction	Manhole	654.093	-342.911	5.240	0.432	4.808	Circular	0.300

Name	Lock
RWP1	None
S1	None
S2	None
Junction	None

Inlets

Junction	Inlet Name	Incoming Item(s)	Bypass Destination	Capacity Type
RWP1	Inlet	Green Roof Area	(None)	No Restriction
S1	Inlet (1)	4.000	(None)	No Restriction
S2	Inlet	2.000	(None)	No Restriction
Junction	Inlet	3.000	(None)	No Restriction

Outlets

Junction	Outlet Name	Outgoing Connection	Outlet Type
RWP1	Outlet	3.000	Free Discharge
S1	Outlet	2.000	Free Discharge
Junction	Outlet	4.000	Free Discharge

Project:	Date:		
AEG11457 16 Sea Way, Middleton on Sea, West Sussex Proposed Network - Surcharged Outfall	05/11/2026 Designed by: OH	Checked by: JA	Approved By: NB
Report Details: Type: Connections Storm Phase: Phase	Company Address: Aegaea Limited		

aegaea
water, civils and environment

Name	Length (m)	Connection Type	Slope (1:X)	Manning's n	Colebrook-White Roughness (mm)	Diameter / Base Width (mm)	Upstream Cover Level (m)	Upstream Invert Level (m)
2.000	42.618	Pipe	150.063		0.6	150	5.250	4.758
3.000	2.609	Pipe	44.214		0.6	100	5.240	4.867
4.000	2.673	Pipe	53.451		0.6	100	5.240	4.808

Name	Downstream Cover Level (m)	Downstream Invert Level (m)	Part Family	Lock	Culvert Type	Culvert Entrance	Wall Thickness (mm)	Material
2.000	5.012	4.474		None	(None)	(None)	0	
3.000	5.240	4.808		None	(None)	(None)	0	
4.000	5.250	4.758		None	(None)	(None)	0	

Name	Trench Width (mm)	Bedding Material	Surrounding Material
2.000	0		
3.000	0		
4.000	0		

Project:	Date:		
AEG11457 16 Sea Way, Middleton on Sea, West Sussex Proposed Network - Surcharged Outfall		Designed by:	Checked by:	Approved By:
		OH	JA	NB
Report Details: Type: Inflow Summary Storm Phase: Phase	Company Address: Aegaea Limited			

aegaea
water, civils and environment

Inflow Label	Connected To	Flow (L/s)	Runoff Method	Area (ha)	Percentage Impervious (%)	Urban Creep (%)	Adjusted Percentage Impervious (%)	Area Analysed (ha)
Green Roof Area	RWP1		Green Roof	0.004		0		0.004
TOTAL		**0.0**		**0.004**				**0.004**

Project:	Date:			
AEG11457 16 Sea Way, Middleton on Sea, West Sussex Proposed Network - Surcharged Outfall	05/11/2026 Designed by: OH	Checked by: JA	Approved By: NB	aegaea water, civils and environment
Report Details: Type: Outfall Details Storm Phase: Phase	Company Address: Aegaea Limited			

Outfalls

Outfall	Outfall Type	Gated	Fixed Surcharged Level (m)	Level Curve
S2	Fixed Surcharged Level	☐	5.000	
FEH : 2 years: +0 %: 15 mins: Summer			5.000	
FEH : 2 years: +0 %: 15 mins: Winter			5.000	
FEH : 2 years: +40 %: 15 mins: Summer			5.000	
FEH : 2 years: +40 %: 15 mins: Winter			5.000	
FEH : 10 years: +40 %: 15 mins: Summer			5.000	
FEH : 10 years: +40 %: 15 mins: Winter			5.000	
FEH : 30 years: +0 %: 15 mins: Summer			5.000	
FEH : 30 years: +0 %: 15 mins: Winter			5.000	
FEH : 30 years: +40 %: 15 mins: Summer			5.000	
FEH : 30 years: +40 %: 15 mins: Winter			5.000	
FEH : 100 years: +0 %: 15 mins: Summer			5.000	
FEH : 100 years: +0 %: 15 mins: Winter			5.000	
FEH : 100 years: +45 %: 15 mins: Summer			5.000	
FEH : 100 years: +45 %: 15 mins: Winter			5.000	
FEH : 2 years: +0 %: 30 mins: Summer			5.000	
FEH : 2 years: +0 %: 30 mins: Winter			5.000	
FEH : 2 years: +40 %: 30 mins: Summer			5.000	
FEH : 2 years: +40 %: 30 mins: Winter			5.000	
FEH : 10 years: +40 %: 30 mins: Summer			5.000	
FEH : 10 years: +40 %: 30 mins: Winter			5.000	
FEH : 30 years: +0 %: 30 mins: Summer			5.000	
FEH : 30 years: +0 %: 30 mins: Winter			5.000	
FEH : 30 years: +40 %: 30 mins: Summer			5.000	
FEH : 30 years: +40 %: 30 mins: Winter			5.000	
FEH : 100 years: +0 %: 30 mins: Summer			5.000	
FEH : 100 years: +0 %: 30 mins: Winter			5.000	
FEH : 100 years: +45 %: 30 mins: Summer			5.000	
FEH : 100 years: +45 %: 30 mins: Winter			5.000	
FEH : 2 years: +0 %: 60 mins: Summer			5.000	
FEH : 2 years: +0 %: 60 mins: Winter			5.000	
FEH : 2 years: +40 %: 60 mins: Summer			5.000	

FEH : 2 years: +40 %: 60 mins: Winter			5.000	
FEH : 10 years: +40 %: 60 mins: Summer			5.000	
FEH : 10 years: +40 %: 60 mins: Winter			5.000	
FEH : 30 years: +0 %: 60 mins: Summer			5.000	
FEH : 30 years: +0 %: 60 mins: Winter			5.000	
FEH : 30 years: +40 %: 60 mins: Summer			5.000	
FEH : 30 years: +40 %: 60 mins: Winter			5.000	
FEH : 100 years: +0 %: 60 mins: Summer			5.000	
FEH : 100 years: +0 %: 60 mins: Winter			5.000	
FEH : 100 years: +45 %: 60 mins: Summer			5.000	
FEH : 100 years: +45 %: 60 mins: Winter			5.000	
FEH : 2 years: +0 %: 120 mins: Summer			5.000	
FEH : 2 years: +0 %: 120 mins: Winter			5.000	
FEH : 2 years: +40 %: 120 mins: Summer			5.000	
FEH : 2 years: +40 %: 120 mins: Winter			5.000	
FEH : 10 years: +40 %: 120 mins: Summer			5.000	
FEH : 10 years: +40 %: 120 mins: Winter			5.000	
FEH : 30 years: +0 %: 120 mins: Summer			5.000	
FEH : 30 years: +0 %: 120 mins: Winter			5.000	
FEH : 30 years: +40 %: 120 mins: Summer			5.000	
FEH : 30 years: +40 %: 120 mins: Winter			5.000	
FEH : 100 years: +0 %: 120 mins: Summer			5.000	
FEH : 100 years: +0 %: 120 mins: Winter			5.000	
FEH : 100 years: +45 %: 120 mins: Summer			5.000	
FEH : 100 years: +45 %: 120 mins: Winter			5.000	
FEH : 2 years: +0 %: 240 mins: Summer			5.000	
FEH : 2 years: +0 %: 240 mins: Winter			5.000	
FEH : 2 years: +40 %: 240 mins: Summer			5.000	
FEH : 2 years: +40 %: 240 mins: Winter			5.000	
FEH : 10 years: +40 %: 240 mins: Summer			5.000	
FEH : 10 years: +40 %: 240 mins: Winter			5.000	
FEH : 30 years: +0 %: 240 mins: Summer			5.000	
FEH : 30 years: +0 %: 240 mins: Winter			5.000	
FEH : 30 years: +40 %: 240 mins: Summer			5.000	

FEH : 30 years: +40 %: 240 mins: Winter			5.000	
FEH : 100 years: +0 %: 240 mins: Summer			5.000	
FEH : 100 years: +0 %: 240 mins: Winter			5.000	
FEH : 100 years: +45 %: 240 mins: Summer			5.000	
FEH : 100 years: +45 %: 240 mins: Winter			5.000	
FEH : 2 years: +0 %: 360 mins: Summer			5.000	
FEH : 2 years: +0 %: 360 mins: Winter			5.000	
FEH : 2 years: +40 %: 360 mins: Summer			5.000	
FEH : 2 years: +40 %: 360 mins: Winter			5.000	
FEH : 10 years: +40 %: 360 mins: Summer			5.000	
FEH : 10 years: +40 %: 360 mins: Winter			5.000	
FEH : 30 years: +0 %: 360 mins: Summer			5.000	
FEH : 30 years: +0 %: 360 mins: Winter			5.000	
FEH : 30 years: +40 %: 360 mins: Summer			5.000	
FEH : 30 years: +40 %: 360 mins: Winter			5.000	
FEH : 100 years: +0 %: 360 mins: Summer			5.000	
FEH : 100 years: +0 %: 360 mins: Winter			5.000	
FEH : 100 years: +45 %: 360 mins: Summer			5.000	
FEH : 100 years: +45 %: 360 mins: Winter			5.000	
FEH : 2 years: +0 %: 480 mins: Summer			5.000	
FEH : 2 years: +0 %: 480 mins: Winter			5.000	
FEH : 2 years: +40 %: 480 mins: Summer			5.000	
FEH : 2 years: +40 %: 480 mins: Winter			5.000	
FEH : 10 years: +40 %: 480 mins: Summer			5.000	
FEH : 10 years: +40 %: 480 mins: Winter			5.000	
FEH : 30 years: +0 %: 480 mins: Summer			5.000	
FEH : 30 years: +0 %: 480 mins: Winter			5.000	
FEH : 30 years: +40 %: 480 mins: Summer			5.000	
FEH : 30 years: +40 %: 480 mins: Winter			5.000	
FEH : 100 years: +0 %: 480 mins: Summer			5.000	
FEH : 100 years: +0 %: 480 mins: Winter			5.000	
FEH : 100 years: +45 %: 480 mins: Summer			5.000	
FEH : 100 years: +45 %: 480 mins: Winter			5.000	
FEH : 2 years: +0 %: 960 mins: Summer			5.000	

FEH : 2 years: +0 %: 960 mins: Winter			5.000	
FEH : 2 years: +40 %: 960 mins: Summer			5.000	
FEH : 2 years: +40 %: 960 mins: Winter			5.000	
FEH : 10 years: +40 %: 960 mins: Summer			5.000	
FEH : 10 years: +40 %: 960 mins: Winter			5.000	
FEH : 30 years: +0 %: 960 mins: Summer			5.000	
FEH : 30 years: +0 %: 960 mins: Winter			5.000	
FEH : 30 years: +40 %: 960 mins: Summer			5.000	
FEH : 30 years: +40 %: 960 mins: Winter			5.000	
FEH : 100 years: +0 %: 960 mins: Summer			5.000	
FEH : 100 years: +0 %: 960 mins: Winter			5.000	
FEH : 100 years: +45 %: 960 mins: Summer			5.000	
FEH : 100 years: +45 %: 960 mins: Winter			5.000	
FEH : 2 years: +0 %: 1440 mins: Summer			5.000	
FEH : 2 years: +0 %: 1440 mins: Winter			5.000	
FEH : 2 years: +40 %: 1440 mins: Summer			5.000	
FEH : 2 years: +40 %: 1440 mins: Winter			5.000	
FEH : 10 years: +40 %: 1440 mins: Summer			5.000	
FEH : 10 years: +40 %: 1440 mins: Winter			5.000	
FEH : 30 years: +0 %: 1440 mins: Summer			5.000	
FEH : 30 years: +0 %: 1440 mins: Winter			5.000	
FEH : 30 years: +40 %: 1440 mins: Summer			5.000	
FEH : 30 years: +40 %: 1440 mins: Winter			5.000	
FEH : 100 years: +0 %: 1440 mins: Summer			5.000	
FEH : 100 years: +0 %: 1440 mins: Winter			5.000	
FEH : 100 years: +45 %: 1440 mins: Summer			5.000	
FEH : 100 years: +45 %: 1440 mins: Winter			5.000	

Runoff Type	Dynamic
Output Interval (mins)	5
Time Step	Shortest
Urban Creep	Apply Global Value
Urban Creep Global Value (%)	0
Junction Flood Risk Margin (mm)	150
Perform No Discharge Analysis	☐

Rainfall

FEH

Type: FEH

Site Location	GB 497120 99876 SZ 97120 99876
Rainfall Version	2022
Summer	☑
Winter	☑

Return Period

Return Period (years)	Increase Rainfall (%)
2.0	0.000
2.0	40.000
10.0	40.000
30.0	0.000
30.0	40.000
100.0	0.000
100.0	45.000

Storm Durations

Duration (mins)	Run Time (mins)
15	30
30	60
60	120
120	240
240	480
360	720
480	960
960	1920
1440	2880

Project:	Date:		
AEG11457 16 Sea Way, Middleton on Sea, West Sussex Proposed Network - Surcharged Outfall	05/11/2026 Designed by: OH	Checked by: JA	Approved By: NB
Report Details: Type: Junctions Summary Storm Phase: Phase	Company Address: Aegaea Limited		

FEH: 2 years: Increase Rainfall (%): +0: Critical Storm Per Item: Rank By: Max. Depth

Junction	Storm Event	Cover Level (m)	Invert Level (m)	Max. Level (m)	Max. Depth (m)	Max. Inflow (L/s)	Max. Resident Volume (m³)	Max. Flooded Volume (m³)	Max. Outflow (L/s)	Total Discharge Volume (m³)	Status
RWP1	FEH: 2 years: +0 %: 15 mins: Summer	5.240	4.867	5.002	0.135	0.3	0.010	0.000	0.2	0.088	Surcharged
S1	FEH: 2 years: +0 %: 15 mins: Summer	5.250	4.758	5.001	0.243	0.8	0.275	0.000	0.4	0.799	Surcharged
S2	FEH: 2 years: +0 %: 15 mins: Summer	5.012	4.474	5.000	0.526	0.8	0.000	0.000	0.8	1.368	Flood Risk
Junction	FEH: 2 years: +0 %: 15 mins: Summer	5.240	4.808	5.002	0.194	0.5	0.014	0.000	0.3	0.414	Surcharged

Project:	Date:		
AEG11457 16 Sea Way, Middleton on Sea, West Sussex Proposed Network - Surcharged Outfall	05/11/2026 Designed by: OH	Checked by: JA	Approved By: NB
Report Details: Type: Junctions Summary Storm Phase: Phase	Company Address: Aegaea Limited		

FEH: 2 years: Increase Rainfall (%): +40: Critical Storm Per Item: Rank By: Max. Depth

Junction	Storm Event	Cover Level (m)	Invert Level (m)	Max. Level (m)	Max. Depth (m)	Max. Inflow (L/s)	Max. Resident Volume (m³)	Max. Flooded Volume (m³)	Max. Outflow (L/s)	Total Discharge Volume (m³)	Status
RWP1	FEH: 2 years: +40 %: 15 mins: Summer	5.240	4.867	5.002	0.135	0.3	0.010	0.000	0.2	0.149	Surcharged
S1	FEH: 2 years: +40 %: 15 mins: Summer	5.250	4.758	5.001	0.243	0.8	0.275	0.000	0.4	0.832	Surcharged
S2	FEH: 2 years: +40 %: 15 mins: Summer	5.012	4.474	5.000	0.526	0.8	0.000	0.000	0.8	1.396	Flood Risk
Junction	FEH: 2 years: +40 %: 15 mins: Summer	5.240	4.808	5.002	0.194	0.5	0.014	0.000	0.3	0.459	Surcharged

Project:	Date:		
AEG11457 16 Sea Way, Middleton on Sea, West Sussex Proposed Network - Surcharged Outfall	05/11/2026 Designed by: OH	Checked by: JA	Approved By: NB
Report Details: Type: Junctions Summary Storm Phase: Phase	Company Address: Aegaea Limited		

aegaea
water, civils and environment

FEH: 10 years: Increase Rainfall (%): +40: Critical Storm Per Item: Rank By: Max. Depth

Junction	Storm Event	Cover Level (m)	Invert Level (m)	Max. Level (m)	Max. Depth (m)	Max. Inflow (L/s)	Max. Resident Volume (m³)	Max. Flooded Volume (m³)	Max. Outflow (L/s)	Total Discharge Volume (m³)	Status
RWP1	FEH: 10 years: +40 %: 60 mins: Summer	5.240	4.867	5.002	0.135	0.5	0.010	0.000	0.5	1.120	Surcharged
S1	FEH: 10 years: +40 %: 60 mins: Summer	5.250	4.758	5.001	0.243	0.8	0.275	0.000	0.5	1.835	Surcharged
S2	FEH: 10 years: +40 %: 15 mins: Summer	5.012	4.474	5.000	0.526	0.8	0.000	0.000	0.8	1.575	Flood Risk
Junction	FEH: 10 years: +40 %: 60 mins: Summer	5.240	4.808	5.002	0.194	0.5	0.014	0.000	0.5	1.447	Surcharged

Project:	Date:		
AEG11457 16 Sea Way, Middleton on Sea, West Sussex Proposed Network - Surcharged Outfall	05/11/2026 Designed by: OH	Checked by: JA	Approved By: NB
Report Details: Type: Junctions Summary Storm Phase: Phase	Company Address: Aegaea Limited		

FEH: 30 years: Increase Rainfall (%): +0: Critical Storm Per Item: Rank By: Max. Depth

Junction	Storm Event	Cover Level (m)	Invert Level (m)	Max. Level (m)	Max. Depth (m)	Max. Inflow (L/s)	Max. Resident Volume (m³)	Max. Flooded Volume (m³)	Max. Outflow (L/s)	Total Discharge Volume (m³)	Status
RWP1	FEH: 30 years: +0 %: 60 mins: Summer	5.240	4.867	5.002	0.135	0.5	0.010	0.000	0.5	1.069	Surcharged
S1	FEH: 30 years: +0 %: 60 mins: Summer	5.250	4.758	5.001	0.243	0.8	0.275	0.000	0.5	1.784	Surcharged
S2	FEH: 30 years: +0 %: 15 mins: Summer	5.012	4.474	5.000	0.526	0.8	0.000	0.000	0.8	1.481	Flood Risk
Junction	FEH: 30 years: +0 %: 60 mins: Summer	5.240	4.808	5.002	0.194	0.5	0.014	0.000	0.5	1.396	Surcharged

Project:	Date:		
AEG11457 16 Sea Way, Middleton on Sea, West Sussex Proposed Network - Surcharged Outfall	05/11/2026 Designed by: OH	Checked by: JA	Approved By: NB
Report Details: Type: Junctions Summary Storm Phase: Phase	Company Address: Aegaea Limited		

FEH: 30 years: Increase Rainfall (%): +40: Critical Storm Per Item: Rank By: Max. Depth

Junction	Storm Event	Cover Level (m)	Invert Level (m)	Max. Level (m)	Max. Depth (m)	Max. Inflow (L/s)	Max. Resident Volume (m³)	Max. Flooded Volume (m³)	Max. Outflow (L/s)	Total Discharge Volume (m³)	Status
RWP1	FEH: 30 years: +40 %: 30 mins: Summer	5.240	4.867	5.003	0.136	0.7	0.010	0.000	0.7	1.088	Surcharged
S1	FEH: 30 years: +40 %: 15 mins: Summer	5.250	4.758	5.001	0.243	0.8	0.275	0.000	0.5	1.126	Surcharged
S2	FEH: 30 years: +40 %: 15 mins: Summer	5.012	4.474	5.000	0.526	0.8	0.000	0.000	0.8	1.674	Flood Risk
Junction	FEH: 30 years: +40 %: 30 mins: Summer	5.240	4.808	5.002	0.194	0.7	0.014	0.000	0.7	1.381	Surcharged

Project:	Date:		
AEG11457 16 Sea Way, Middleton on Sea, West Sussex Proposed Network - Surcharged Outfall	05/11/2026		
	Designed by:	Checked by:	Approved By:
	OH	JA	NB
Report Details: Type: Junctions Summary Storm Phase: Phase	Company Address: Aegaea Limited		

FEH: 100 years: Increase Rainfall (%): +0: Critical Storm Per Item: Rank By: Max. Depth

Junction	Storm Event	Cover Level (m)	Invert Level (m)	Max. Level (m)	Max. Depth (m)	Max. Inflow (L/s)	Max. Resident Volume (m³)	Max. Flooded Volume (m³)	Max. Outflow (L/s)	Total Discharge Volume (m³)	Status
RWP1	FEH: 100 years: +0 %: 30 mins: Summer	5.240	4.867	5.002	0.135	0.6	0.010	0.000	0.7	0.980	Surcharged
S1	FEH: 100 years: +0 %: 15 mins: Summer	5.250	4.758	5.001	0.243	0.8	0.275	0.000	0.4	1.076	Surcharged
S2	FEH: 100 years: +0 %: 15 mins: Summer	5.012	4.474	5.000	0.526	0.8	0.000	0.000	0.8	1.624	Flood Risk
Junction	FEH: 100 years: +0 %: 30 mins: Summer	5.240	4.808	5.002	0.194	0.7	0.014	0.000	0.7	1.273	Surcharged

Project:	Date:		
AEG11457 16 Sea Way, Middleton on Sea, West Sussex Proposed Network - Surcharged Outfall	05/11/2026 Designed by: OH	Checked by: JA	Approved By: NB
Report Details: Type: Junctions Summary Storm Phase: Phase	Company Address: Aegaea Limited		

FEH: 100 years: Increase Rainfall (%): +45: Critical Storm Per Item: Rank By: Max. Depth

Junction	Storm Event	Cover Level (m)	Invert Level (m)	Max. Level (m)	Max. Depth (m)	Max. Inflow (L/s)	Max. Resident Volume (m³)	Max. Flooded Volume (m³)	Max. Outflow (L/s)	Total Discharge Volume (m³)	Status
RWP1	FEH: 100 years: +45 %: 30 mins: Summer	5.240	4.867	5.004	0.137	0.9	0.010	0.000	0.9	1.392	Surcharged
S1	FEH: 100 years: +45 %: 30 mins: Summer	5.250	4.758	5.002	0.244	0.9	0.276	0.000	0.9	2.040	Surcharged
S2	FEH: 100 years: +45 %: 15 mins: Summer	5.012	4.474	5.000	0.526	0.8	0.000	0.000	0.8	1.805	Flood Risk
Junction	FEH: 100 years: +45 %: 30 mins: Summer	5.240	4.808	5.003	0.195	0.9	0.014	0.000	0.9	1.685	Surcharged

Project:	Date:		
AEG11457 16 Sea Way, Middleton on Sea, West Sussex Proposed Network - Surcharged Outfall	05/11/2026 Designed by: OH	Checked by: JA	Approved By: NB
Report Details: Type: Connections Summary Storm Phase: Phase	Company Address: Aegaea Limited		

FEH: 2 years: Increase Rainfall (%): +0: Critical Storm Per Item: Rank By: Max. Flow

Connection	Storm Event	Connection Type	From	To	Upstream Cover Level (m)	Max. US Water Level (m)	Max. Flow Depth (m)	Discharge Volume (m³)	Max. Velocity (m/s)	Flow / Capacity	Max. Flow (L/s)	Status
2.000	FEH: 2 years: +0 %: 15 mins: Summer	Pipe	S1	S2	5.250	5.001	0.150	0.000	0.0	0.03	0.4	Surcharged
3.000	FEH: 2 years: +0 %: 120 mins: Summer	Pipe	RWP1	Junction	5.240	5.002	0.100	0.333	0.0	0.02	0.2	Surcharged
4.000	FEH: 2 years: +0 %: 15 mins: Summer	Pipe	Junction	S1	5.240	5.002	0.100	0.000	0.0	0.04	0.3	Surcharged

Project:	Date:		
AEG11457 16 Sea Way, Middleton on Sea, West Sussex Proposed Network - Surcharged Outfall	05/11/2026 Designed by: OH	Checked by: JA	Approved By: NB
Report Details: Type: Connections Summary Storm Phase: Phase	Company Address: Aegaea Limited		

FEH: 2 years: Increase Rainfall (%): +40: Critical Storm Per Item: Rank By: Max. Flow

Connection	Storm Event	Connection Type	From	To	Upstream Cover Level (m)	Max. US Water Level (m)	Max. Flow Depth (m)	Discharge Volume (m³)	Max. Velocity (m/s)	Flow / Capacity	Max. Flow (L/s)	Status
2.000	FEH: 2 years: +40 %: 15 mins: Summer	Pipe	S1	S2	5.250	5.001	0.150	0.000	0.0	0.03	0.4	Surcharged
3.000	FEH: 2 years: +40 %: 120 mins: Summer	Pipe	RWP1	Junction	5.240	5.002	0.100	0.612	0.0	0.03	0.3	Surcharged
4.000	FEH: 2 years: +40 %: 15 mins: Summer	Pipe	Junction	S1	5.240	5.002	0.100	0.000	0.0	0.04	0.3	Surcharged

Project:	Date:		
AEG11457 16 Sea Way, Middleton on Sea, West Sussex Proposed Network - Surcharged Outfall	05/11/2026 Designed by: OH	Checked by: JA	Approved By: NB
Report Details: Type: Connections Summary Storm Phase: Phase	Company Address: Aegaea Limited		

FEH: 10 years: Increase Rainfall (%): +40: Critical Storm Per Item: Rank By: Max. Flow

Connection	Storm Event	Connection Type	From	To	Upstream Cover Level (m)	Max. US Water Level (m)	Max. Flow Depth (m)	Discharge Volume (m³)	Max. Velocity (m/s)	Flow / Capacity	Max. Flow (L/s)	Status
2.000	FEH: 10 years: +40 %: 30 mins: Summer	Pipe	S1	S2	5.250	5.001	0.150	0.000	0.0	0.04	0.6	Surcharged
3.000	FEH: 10 years: +40 %: 30 mins: Summer	Pipe	RWP1	Junction	5.240	5.002	0.100	0.614	0.1	0.06	0.6	Surcharged
4.000	FEH: 10 years: +40 %: 30 mins: Summer	Pipe	Junction	S1	5.240	5.002	0.100	0.390	0.1	0.07	0.6	Surcharged

Project:	Date:		
AEG11457 16 Sea Way, Middleton on Sea, West Sussex Proposed Network - Surcharged Outfall	05/11/2026 Designed by: OH	Checked by: JA	Approved By: NB
Report Details: Type: Connections Summary Storm Phase: Phase	Company Address: Aegaea Limited		

FEH: 30 years: Increase Rainfall (%): +0: Critical Storm Per Item: Rank By: Max. Flow

Connection	Storm Event	Connection Type	From	To	Upstream Cover Level (m)	Max. US Water Level (m)	Max. Flow Depth (m)	Discharge Volume (m³)	Max. Velocity (m/s)	Flow / Capacity	Max. Flow (L/s)	Status
2.000	FEH: 30 years: +0 %: 30 mins: Summer	Pipe	S1	S2	5.250	5.001	0.150	0.000	0.0	0.04	0.6	Surcharged
3.000	FEH: 30 years: +0 %: 30 mins: Summer	Pipe	RWP1	Junction	5.240	5.002	0.100	0.566	0.1	0.06	0.5	Surcharged
4.000	FEH: 30 years: +0 %: 30 mins: Summer	Pipe	Junction	S1	5.240	5.002	0.100	0.342	0.1	0.07	0.6	Surcharged

Project:	Date:		
AEG11457 16 Sea Way, Middleton on Sea, West Sussex Proposed Network - Surcharged Outfall		Designed by: OH	Checked by: JA	Approved By: NB
Report Details: Type: Connections Summary Storm Phase: Phase	Company Address: Aegaea Limited		

FEH: 30 years: Increase Rainfall (%): +40: Critical Storm Per Item: Rank By: Max. Flow

Connection	Storm Event	Connection Type	From	To	Upstream Cover Level (m)	Max. US Water Level (m)	Max. Flow Depth (m)	Discharge Volume (m³)	Max. Velocity (m/s)	Flow / Capacity	Max. Flow (L/s)	Status
2.000	FEH: 30 years: +40 %: 30 mins: Summer	Pipe	S1	S2	5.250	5.001	0.150	0.146	0.0	0.05	0.8	Surcharged
3.000	FEH: 30 years: +40 %: 30 mins: Summer	Pipe	RWP1	Junction	5.240	5.003	0.100	0.863	0.1	0.08	0.7	Surcharged
4.000	FEH: 30 years: +40 %: 30 mins: Summer	Pipe	Junction	S1	5.240	5.002	0.100	0.639	0.1	0.09	0.7	Surcharged

Project:	Date:		
AEG11457 16 Sea Way, Middleton on Sea, West Sussex Proposed Network - Surcharged Outfall	05/11/2026 Designed by: OH	Checked by: JA	Approved By: NB
Report Details: Type: Connections Summary Storm Phase: Phase	Company Address: Aegaea Limited		

FEH: 100 years: Increase Rainfall (%): +0: Critical Storm Per Item: Rank By: Max. Flow

Connection	Storm Event	Connection Type	From	To	Upstream Cover Level (m)	Max. US Water Level (m)	Max. Flow Depth (m)	Discharge Volume (m³)	Max. Velocity (m/s)	Flow / Capacity	Max. Flow (L/s)	Status
2.000	FEH: 100 years: +0 %: 30 mins: Summer	Pipe	S1	S2	5.250	5.001	0.150	0.038	0.0	0.05	0.7	Surcharged
3.000	FEH: 100 years: +0 %: 30 mins: Summer	Pipe	RWP1	Junction	5.240	5.002	0.100	0.755	0.1	0.07	0.7	Surcharged
4.000	FEH: 100 years: +0 %: 30 mins: Summer	Pipe	Junction	S1	5.240	5.002	0.100	0.531	0.1	0.08	0.7	Surcharged

Project:	Date:		
AEG11457 16 Sea Way, Middleton on Sea, West Sussex Proposed Network - Surcharged Outfall	05/11/2026 Designed by: OH	Checked by: JA	Approved By: NB
Report Details: Type: Connections Summary Storm Phase: Phase	Company Address: Aegaea Limited		

FEH: 100 years: Increase Rainfall (%): +45: Critical Storm Per Item: Rank By: Max. Flow

Connection	Storm Event	Connection Type	From	To	Upstream Cover Level (m)	Max. US Water Level (m)	Max. Flow Depth (m)	Discharge Volume (m³)	Max. Velocity (m/s)	Flow / Capacity	Max. Flow (L/s)	Status
2.000	FEH: 100 years: +45 %: 30 mins: Summer	Pipe	S1	S2	5.250	5.002	0.150	0.450	0.1	0.06	0.9	Surcharged
3.000	FEH: 100 years: +45 %: 30 mins: Summer	Pipe	RWP1	Junction	5.240	5.004	0.100	1.167	0.1	0.1	0.9	Surcharged
4.000	FEH: 100 years: +45 %: 30 mins: Summer	Pipe	Junction	S1	5.240	5.003	0.100	0.943	0.1	0.11	0.9	Surcharged

Appendix E - Sky Garden Wildflower Blanket System specification



SYSTEM SUMMARY

SKY GARDEN WILDFLOWER BLANKET SYSTEM SGWBSS01

Version 1.2

SKY GARDEN WILDFLOWER BLANKET SYSTEM

Sky Garden's wildflower systems are the most biodiverse and attractive green roof system when fully established. Each wildflower blanket is sown with a seed mix of 38 species of wildflower and grass to create a vibrant array of colour on your roof. The species have been specifically chosen to survive roof conditions and increase biodiversity on extensive, intensive and podium systems.

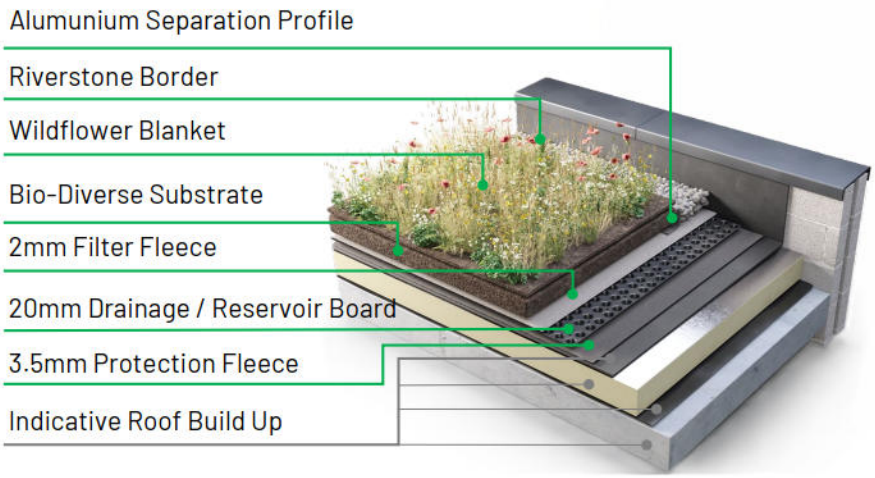

The depth of substrate is increased to 100mm compared to the sedum system's 60mm, allowing for the wildflowers to flourish and establish healthily. Although the flowers are not in bloom throughout the year, the winter months still provide a green finish throughout the roof area.

APPLICATIONS

Systems are suitable for new build but generally too heavy for refurbishment. Roof pitches up to 15° can be greened but over 15° retention and irrigation are required.

Blankets offer instant greening solutions and the system is suitable for high visibility situations where established finishes are required. The system weight allows for inverted system ballasting as dry weights exceed 80kg/m2.

MAINTENANCE

Wildflower blanket systems require more maintenance than standard sedum systems. It is recommended that old growth is removed annually to ensure the roof remains healthy and to minimise invasive species.

IRRIGATION

Wildflower Blanket systems with a minimum of 80mm substrate may require irrigation for the first six months post installation and then periodically through the summer to maintain aesthetic performance.

ADDITIONS

Wildflower, cornflower, herbs or perennials can be added to enhance biodiversity (growing time 8-12 months, variety dependent).

BENEFITS

- Instant greening & better establishment
- Less maintenance than immature systems
- Greater species diversity
- Greater ecological function
- Better habitat and pollen/nectar provision

COMPONENTS INCLUDED

Protection Layer	Geo synthetic filter fleece	3.5mm
Drainage Layer	Drainage and retention cell	20mm
Filtration Layer	Geo synthetic filtration fleece	2mm (nominal)
Substrate Layer	Blended growing medium	80mm
Vegetation Layer	Wildflower blanket	30mm
Number of Species	30+	
Contour	System laid flat	

CHAS
smas worksafe contractor
gro
Constructionline Silver Member
NFRC LEADING ROOFING EXCELLENCE
British Association Landscape Industries ACCREDITED

SYSTEM PERFORMANCE

System Water Reservoir Capacity	8-10L/m^2
System Weight Dry	108kg/m^2
System Weight Wet	156kg/m^2
Substrate runoff reduction	70%
Vegetation Coverage	>90%
Flowering Season	Spring / Autumn
Typical Maintenance Visits Per Year	2
BREEAM Credits Available	Yes

ADDITIONAL ITEMS TO STANDARD SYSTEM OFFER

River Stone Detail (Edge)	500mm (20:40) Stone detail
River Stone Detail (Penetrations)	500mm (20:40) Stone detail
Metal Retention Detail	1.5mm bonded or ballasted system
Metal Separation Detail	1.5mm bonded or ballasted system
Irrigation	Recommended for establishment and periods of drought
Additional Species	Regional wildflower and cornflower over seed 1-2gms/m^2

HABITAT CREATION AND CONTOUR

Habitat Creation	Rock and log piles
System Contour	Light 20mm contour can be specified at design

BENEFIT MATRIX

Based on the sedum blanket system stated above the following benefits should be achievable:

Aesthetic Quality		Biodiversity	
Air Quality		Energy	
Urban Heat Island		Water Attenuation	
Acoustics		Maintenance	

(**Ratings of the Benefit Matrix above: 1** – Icon Low Benefit, 2 - Icon's Medium Benefit, **3** – Icon's High Benefit)

CHAS
smas worksafe contractor
gro
Constructionline Silver Member
NFRC LEADING ROOFING EXCELLENCE
British Association Landscape Industries ACCREDITED

BIODIVERSITY NET GAIN

A Wildflower blanket roof represents a significant biodiversity net gain for plant and animal species. Through its vegetation, the roof attracts pollinators, supports local wildlife, and enhances urban biodiversity. Its role in stormwater management, microclimate regulation, and soil health further amplifies its positive impact on ecosystem resilience and sustainability.

SkyGarden
GREEN SOLUTIONS

[redacted]

Head Office

Unit 3, Miller Court
Tewkesbury, Gloucestershire,
GL20 8DN

London Office

Kemp House,
152 City Road,
London. EC1V 2NX

[redacted]

CHAS
smas worksafe contractor
gro
Constructionline Silver Member
NFRC LEADING ROOFING EXCELLENCE
British Association Landscape Industries ACCREDITED



DATA SHEET

SKY GARDEN WILDFLOWER BLANKET SGWB01

Version 1.0

SKY GARDEN WILDFLOWER BLANKET

Sky Garden's UK provenance Biodiverse Wildflower Blanket contains 38 native species (33 wildflower and 5 grasses) as a pre-grown vegetation cover for use on Extensive and Intensive green roofs, podiums and landscaping projects. Species have been carefully chosen to provide a long flowering season from Spring through to late Autumn. It has a varied range of colour and habitat which is attractive to pollinators and in aesthetic appearance. Sky Garden's Biodiverse Wildflower Blanket can be used to meet local and national Biodiversity Action Plans and BREEAM energy credits. A pre-cultivated UK grown vegetation blanket, containing 38 species specifically chosen to encourage biodiversity on Extensive, Intensive and Podium roof applications. Grown on 20 mm substrate base on a carrier membrane.



SYSTEM CONSIDERATIONS

- Instant vegetative cover for wildflower systems.
- Recommended minimum substrate depth 100mm.
- Sky Garden recommends bi-annual maintenance of wildflower roofs to remove unwanted invasive species and to ensure long term system functionality and sustainability.
- Spring remedial and Autumn strimming.

PHYSICAL PROPERTIES

Composition	Base - Geotextile fabric	
	Growing Medium – 20 mm Biodiversity Mix	
	Vegetation - Plants grown from native provenance seed.	
Total Height	150 mm plant height, pre delivered and mown. Fully established height up to c. 1000 mm	
Weight (dry)	10 kg/m2	
Weight (saturated)	30 kg/m2	
Consignment Size	30 m2 per Pallet (approx.)	
Colour	Seasonal variation	
Sizes	2m x 1m	
Species	**Wildflowers:** • Achillea Millefolium (Yarrow) • Agrimonia Eupatoria (Agrimony) • Anthyllis Vulneraria (Kidney Vetch) • Betonica Officinalis (Betony) • Campanula Glomerata (Clustered Bellflower) • Campanula Rotundifolia (Harebell) • Centaurea Nigra (Lesser Knapweed) • Echium Vulgare (Viper's Bugloss) • Galium Verum (Lady's Bedstraw) • Glebionis Segetum (Cornflower Corn Marigold) • Hypericum Perforatum (Perforate St John's Wort) • Hypochaeris Radicata (Catsear) • Knautia Arvensis (Field Scabious) • Leontodon Hispidus (Rough Hawkbit) • Leucanthemum Vulgare (Oxeye Daisy) • Linaria Vulgaris (Common Toadflax) • Lotus Corniculatus (Birdsfoot Trefoil) • Medicago Lupulina (Black Medic) • Origanum vulgare (Wild Marjoram)	• Papaver Rhoeas (Common Poppy) • Plantago Media (Hoary Plantain) • Primula Veris (Cowslip) • Prunella Vulgaris (Selfheal) • Ranunculus Acris (Meadow Buttercup) • Rhinanthus Minor (Yellow Rattle) • Rumex Acetosa (Common Sorrel) • Sanguisorba Minor SSP. Minor (Salad Burnet) • Scabiosa columbaria (Small Scabious) • Silene Sioica (Red Campion), Silene Vulgaris (Bladder Campion) • Thymus (Thyme), Trifolium Pratense (Red Clover). **Grasses:** • Agrostis Capillaris (Brown Top Bent) • Anthoxanthum Odoratum (Sweet Vernal Grass) • Briza Media (Quaking Grass) • Cynosurus Cristatus (Crested Dogstail) • Festuca Rubra (Red Fescue)

SkyGarden GREEN SOLUTIONS

[redacted]

Head Office

Unit 3, Miller Court
Tewkesbury, Gloucestershire,
GL20 8DN

[redacted]

London Office

Kemp House,
152 City Road,
London. EC1V 2NX

[redacted]

CHAS
smas worksafe contractor
gro
Constructionline Silver Member
NFRC LEADING ROOFING EXCELLENCE
British Association Landscape Industries ACCREDITED

Version 1.1

SYSTEM DIAGRAM

SKY GARDEN WILDFLOWER BLANKET SYSTEM



SkyGarden

Head Office

Unit 3, Miller Court
Tewkesbury,
Gloucestershire,
GL20 8DN

London Office

Kemp House,
152 City Road,
London. EC1V 2NX

[redacted]

Email - enquiries@sky-garden.co.uk

Q37 Details

Protection Fleece

- 3.5mm non-woven geotextile

Drainage Layer

- 20mm Drainage reservoir board

Filter Fleece

- 2mm (nominal) non-woven geotextile

Separation Detail

- 1.5mm Aluminium profile 100mm (H) x 80mm (W)

Growing Medium

- Bio-Diverse Substrate. Depth to specification

Sedum Blanket

- 33 Wildflowers and 5 Grasses in a pre-grown mat

Indicative Build-up Height – 103.5mm

System Name
Wildflower Blanket System

Drawn By:	**Scale**:
DH	Do not scale

Drawing Reference
WBSD01