ORIGINAL SIZE OF THIS DRAWING IS A3

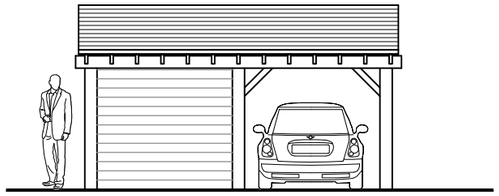

SOUTH EAST - ELEVATION

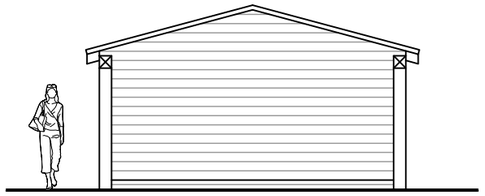

SOUTH WEST - ELEVATION

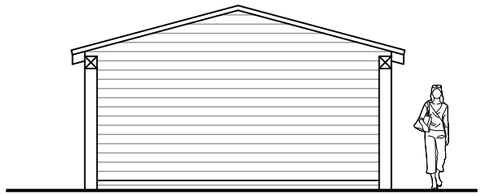

NORTH EAST - ELEVATION

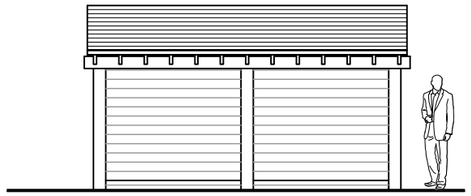

NORTH WEST - ELEVATION

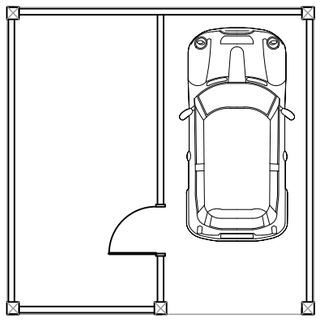

PLAN

SCALE

5 METRES

E-mail michael@admarchitects.co.uk
web site www.admarchitects.co.uk

REV.	DATE	REVISIONS
A	06.06.19	Roof pitch/ design amended.

NOTES: 1. DO NOT SCALE FROM THIS DRAWING (EXCEPT FOR PLANNING APPLICATION PURPOSES). 2. ALL DIMENSIONS AND LEVELS TO BE CHECKED ON SITE BEFORE CARRYING OUT WORK. 3. ALL DISCREPANCIES TO BE REPORTED TO THE ARCHITECT BEFORE CARRYING OUT WORK. 4. READ WITH OTHER CONTRACT DOCUMENTS 5.IF IN DOUBT ASK.

COPY RIGHT & OWNERSHIP OF THIS DRAWING AND THE DESIGN OF THE BUILDING SHOWN ON THIS DRAWING IS VESTED IN THE ARCHITECTS WHOSE PRIOR WRITTEN CONSENT IS REQUIRED FOR ITS USE, REPRODUCTION OR FOR COPYING TO ANY THIRD PARTY.

© COPYRIGHT – ALL RIGHTS RESERVED

PROJECT: Little Hazels

CLIENT: Steve Keet

DRAWING TITLE: Garage Plan & Elevations as Proposed

COMPUTER FILE NAME DWG.DWG

ORIGINAL SIZE OF THIS DRAWING IS A3

DRAWN	CHECKED	DATE	SCALE – AS SCALE RODS	PROJECT NUMBER	ACTUAL DRAWING NUMBER	REVISION
BD	MB	Mach 2019	1:100	1687	26	A

TRINITY, STRETTINGTON, CHICHESTER, WEST SUSSEX, PO18 0LA, UNITED KINGDOM. TEL. 01243 771166

ARCHITECTS DESIGN & MANAGEMENT

ARUN DISTRICT COUNCIL M/29/19/HH