ORIGINAL SIZE OF THIS DRAWING IS A3

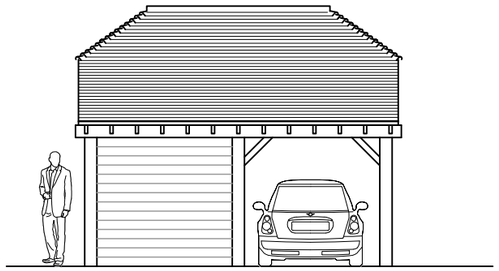

SOUTH WEST - ELEVATION

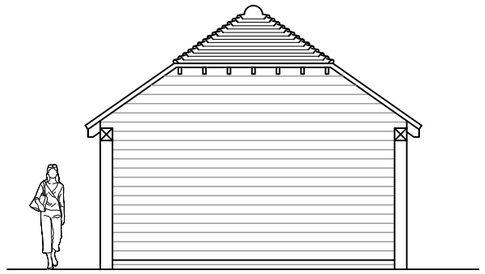

SOUTH EAST - ELEVATION

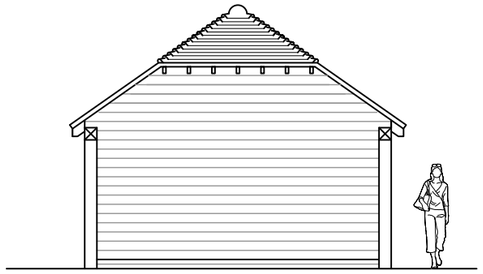

NORTH WEST - ELEVATION

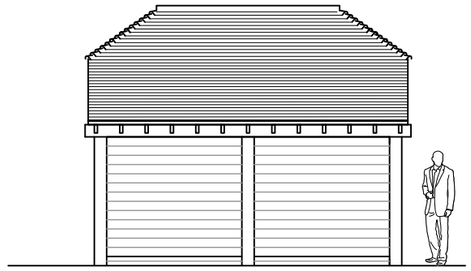

NORTH EAST - ELEVATION

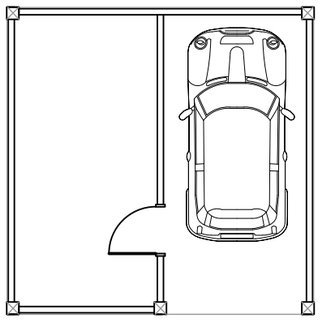

PLAN

SCALE

5 METRES

© COPYRIGHT – ALL RIGHTS RESERVED

E-mail michael@admarchitects.co.uk
web site www.admarchitects.co.uk

REV.	DATE	REVISIONS

NOTES: 1. DO NOT SCALE FROM THIS DRAWING (EXCEPT FOR PLANNING APPLICATION PURPOSES). 2. ALL DIMENSIONS AND LEVELS TO BE CHECKED ON SITE BEFORE CARRYING OUT WORK. 3. ALL DISCREPANCIES TO BE REPORTED TO THE ARCHITECT BEFORE CARRYING OUT WORK. 4. READ WITH OTHER CONTRACT DOCUMENTS 5.IF IN DOUBT ASK.
COPY RIGHT & OWNERSHIP OF THIS DRAWING AND THE DESIGN OF THE BUILDING SHOWN ON THIS DRAWING IS VESTED IN THE ARCHITECTS WHOSE PRIOR WRITTEN CONSENT IS REQUIRED FOR ITS USE, REPRODUCTION OR FOR COPYING TO ANY THIRD PARTY.

PROJECT				CLIENT		
Little Hazels				Steve Keet		
DRAWING TITLE				COMPUTER FILE NAME DWG.DWG		
Garage Plan & Elevations as Proposed				ORIGINAL SIZE OF THIS DRAWING IS A3		
				DRAWING NUMBER		
DRAWN	CHECKED	DATE	SCALE – AS SCALE RODS	PROJECT NUMBER	ACTUAL DRAWING NUMBER	REVISION
BD	MB	Mach 2019	1:100	1687	26	-

TRINITY, STRETTINGTON, CHICHESTER, WEST SUSSEX, PO18 0LA, UNITED KINGDOM. TEL. 01243 771166

ARCHITECTS
DESIGN
&
MANAGEMENT

ARUN DISTRICT COUNCIL M/29/19/HH