ARUN DISTRICT COUNCIL:M/19/08/ 17/03/2008

ARUN DISTRICT COUNCIL
No. M/19/08
SUBSTITUTION
RECEIVED 22/3/08



EAST [rear]

SOUTH

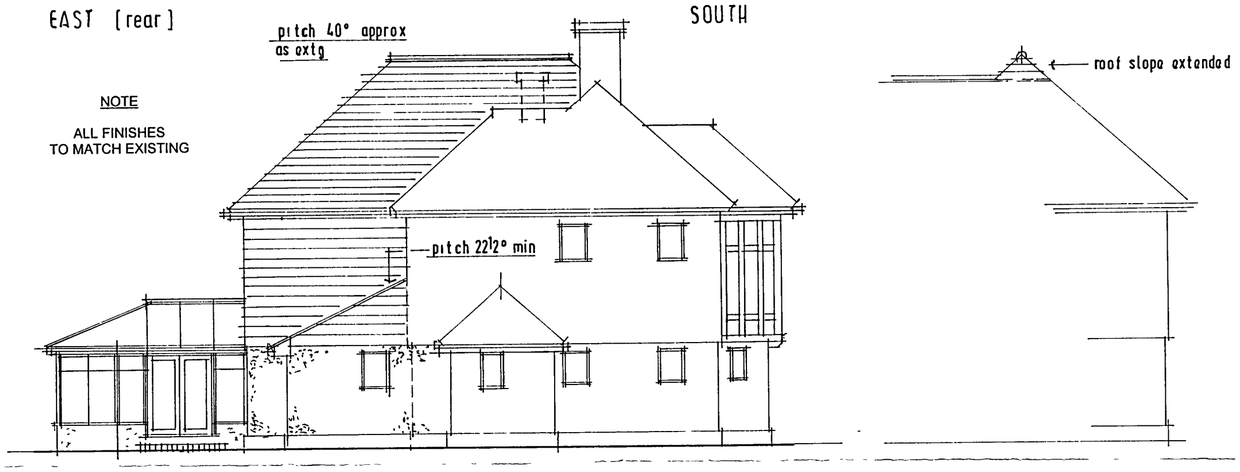

NOTE

ALL FINISHES TO MATCH EXISTING

NORTH

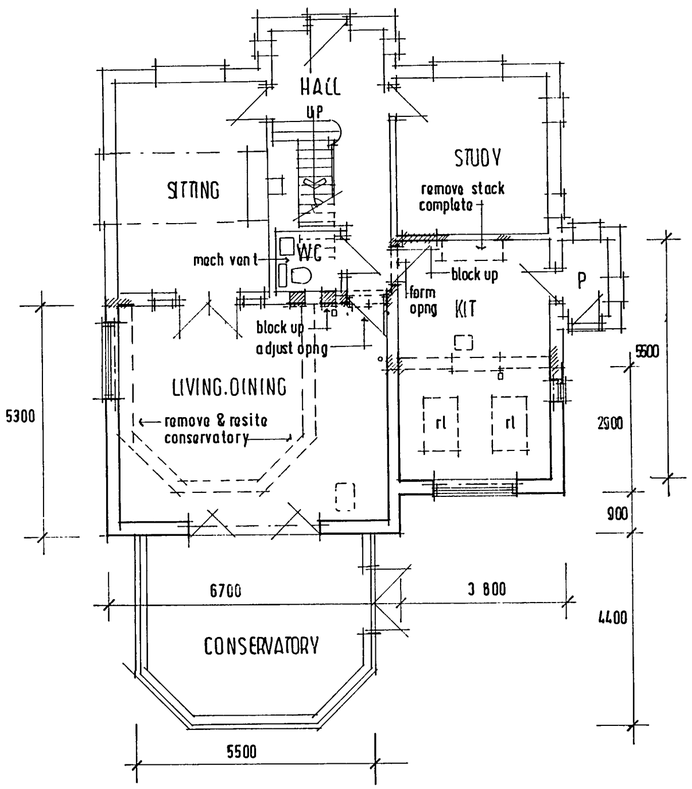

GROUND

PART EAST [front]

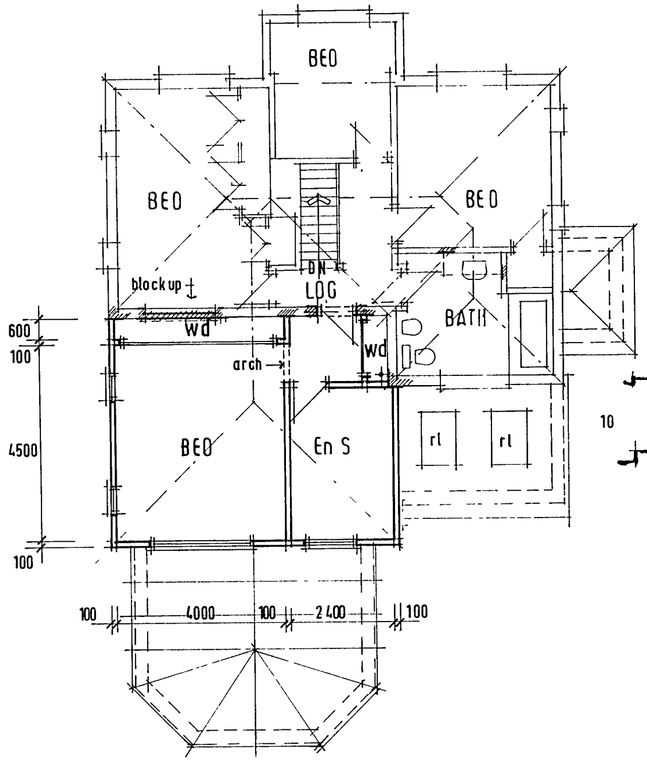

FIRST

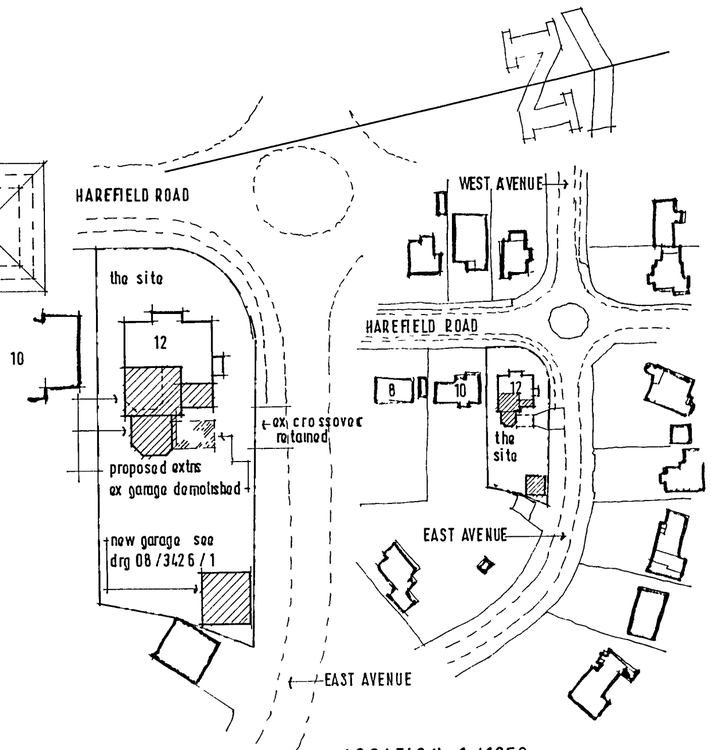

BLOCK PLAN 1/500

LOCATION 1/1250

REVISIONS

A. 25.3.08 first floor south elevn window cills raised as agreed with t.p.o.

TREVOR E. UNSTED LTD

RBS HOUSE • 61 SEA LANE • RUSTINGTON • WEST SUSSEX • BN16 2RQ Tel 01903 859090

Client MR & MRS J SUGGETT

Project EXTENSION/ALTERATION 12; HAREFIELD ROAD; MIDDLETON; BOGNOR REGIS; W/SUSSEX; PO 22, 6EB

Drawing

Scale 1:100

Date MARCH 2008

Drawn tu

Copyright

Drawing No 08/3426/1

Revisions A

The contractor must check all dimensions and levels on site and no dimensions are to be scaled from drawings

It is the contractor's responsibility to ensure compliance with all statutory authority requirements, carry out works with total regard to existing and retained structure Works and materials to latest CP/BS

Drawing to be read in strict accordance with engineer's information where applicable

All structural timber C16 unless otherwise noted All structural and external timber pressure impregnated with preservative, cut ends site swabbed with Cuprinol or similar treatment

Local authority to witness satisfactory test on all new and affected foul/storm drainage