ARUN DISTRICT COUNCIL:M/19/08
superseded 27.03.08

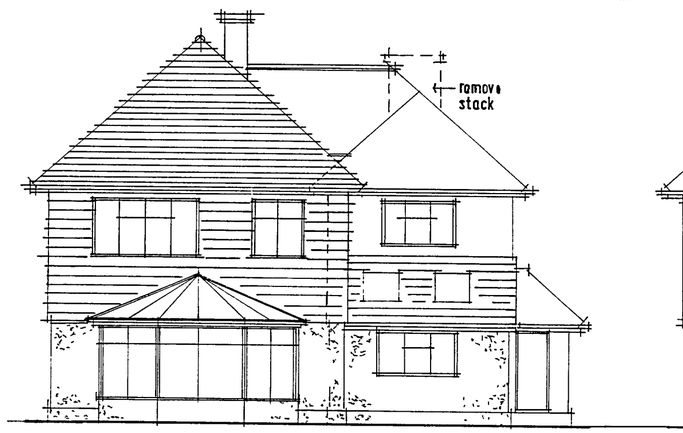

EAST [rear]



SOUTH

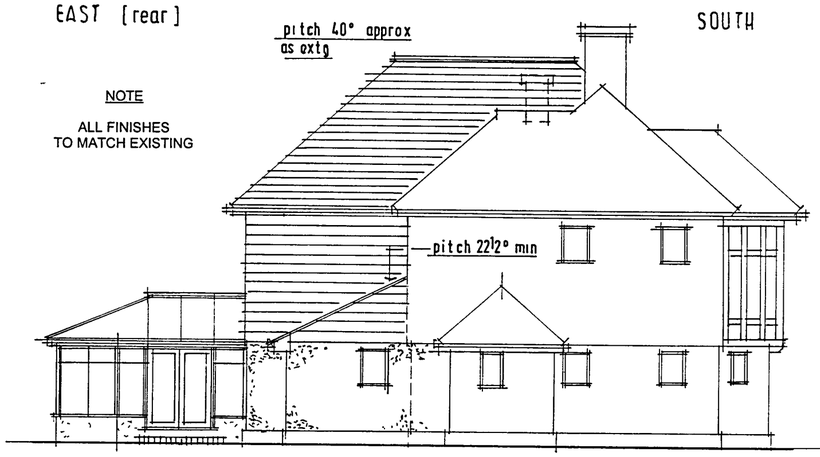

NOTE

ALL FINISHES
TO MATCH EXISTING

NORTH

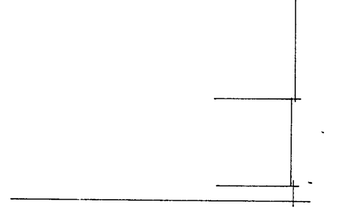

PART EAST [front]

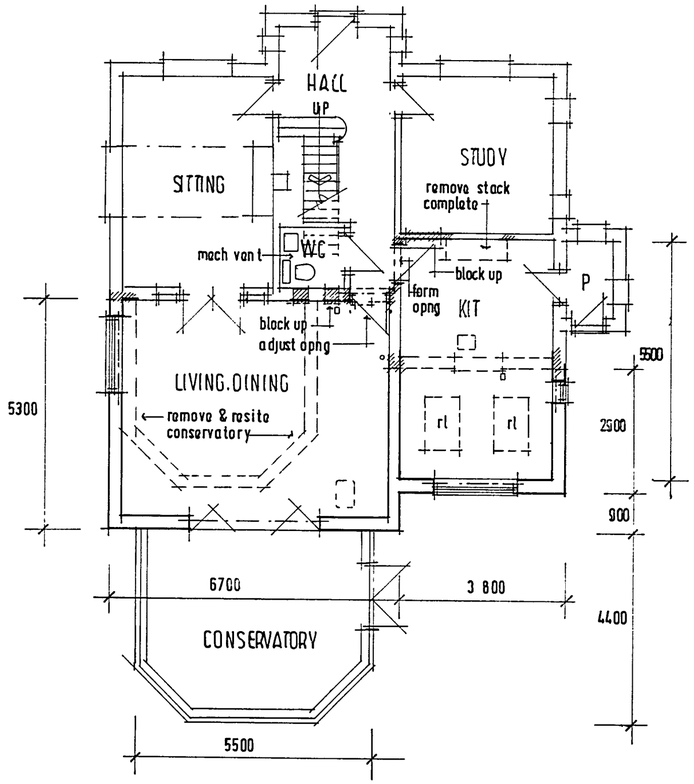

GROUND

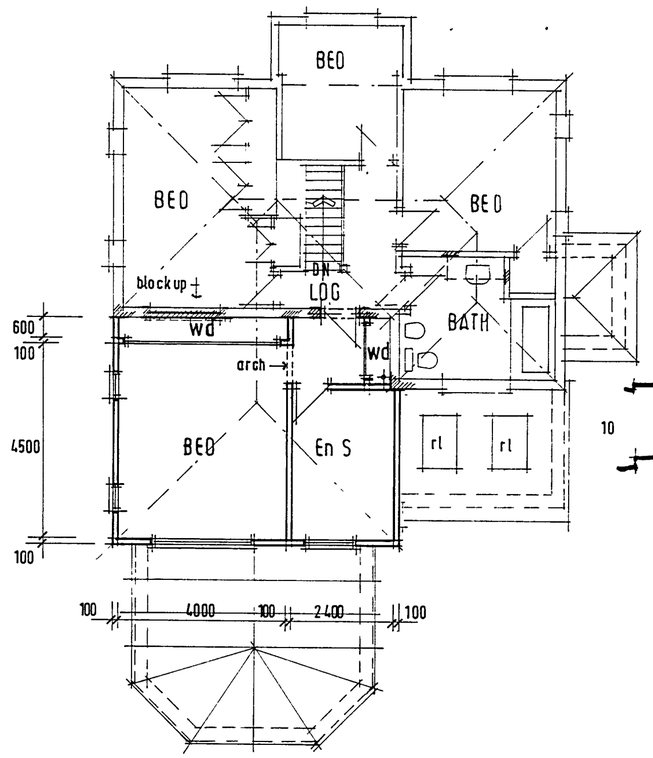

FIRST

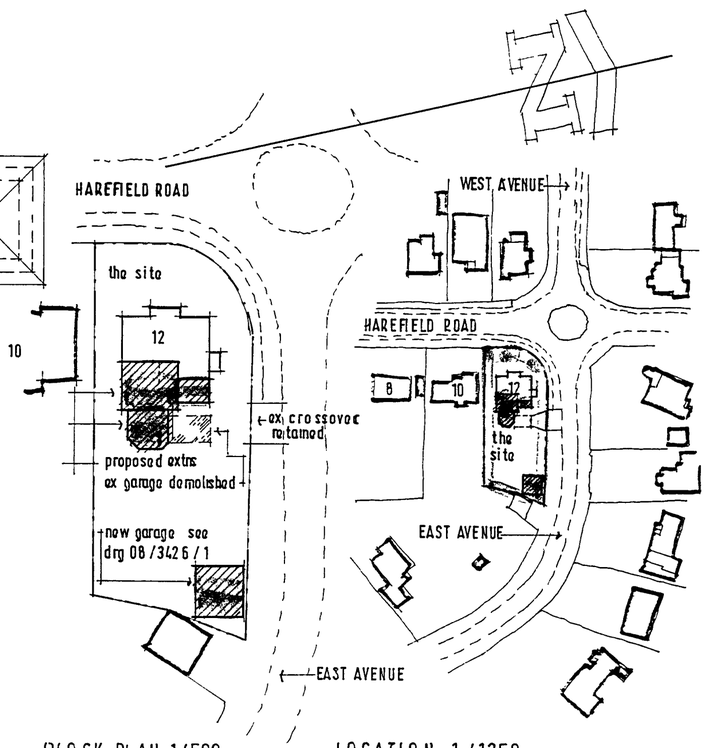

BLOCK PLAN 1/500

LOCATION 1/1250

TREVOR E. UNSTED LTD

RBS HOUSE • 61 SEA LANE • RUSTINGTON • WEST SUSSEX • BN16 2RQ Tel 01903 859090

Client MR & MRS J SUGGETT

Project EXTENSION/ALTERATION 12; HAREFIELD ROAD; MIDDLETON; BOGNOR REGIS; W/SUSSEX; PO 22; 6EB

Drawing

Scale 1:100

Date MARCH 2008

Drawn tu

Copyright

Drawing No 08/3426/1

Revisions

The contractor must check all dimensions and levels on site ~~and no dimensions are to be scaled from drawings~~

It is the contractor's responsibility to ensure compliance with all statutory authority requirements, carry out works with total regard to existing and retained structure Works and materials to latest CP/BS

Drawing to be read in strict accordance with engineer's information where applicable

All structural timber C16 unless otherwise noted All structural and external timber pressure impregnated with preservative, cut ends site swabbed with Cuprinol or similar treatment

Local authority to witness satisfactory test on all new and affected foul/storm drainage