Royal HaskoningDHV
Enhancing Society Together

HASKONINGDHV UK LTD.
15 Bermondsey Square
London
SE1 3UN
United Kingdom

[redacted]
royalhaskoningdhv.com **W**

Sarah Burrow
Arun District Council
By Email Only

Date:	15 February 2024	Contact name:	Louisa Wade
Your reference:	M/10/23/PL	Telephone:	[redacted]
Our reference:	PC5188-RHD-XX-XX-CO-X-0001	Email:	
Classification:	Project related		
Enclosures	Appendices		

Dear Sarah,

Response to Condition 5 Surface Water Drainage of Planning Permission M/109/21/PL at 188 Elmer Road, Bognor Regis PO22 6JA

Further to our recent correspondence, I have set out below details of the steps taken to address Conditions 5: Surface Water Drainage of the Planning Permission M/109/21/PL. Condition 5 states:

"5. Development shall not commence, other than works of site survey and investigation, until full details of the proposed surface water drainage scheme have been submitted to and approved in writing by the Local Planning Authority. The design should follow the hierarchy of preference for different types of surface water drainage disposal systems as set out in Approval Document H of the Building Regulations, and the recommendations of the SuDS Manual produced by CIRIA.

Winter groundwater monitoring to establish highest annual groundwater levels and winter percolation testing to BRE365, or similar approved, will be required to support the design of any infiltration drainage. No part of the building shall be occupied until the complete surface water drainage system serving the property has been implemented in accordance with the agreed details and the details so agreed shall be maintained in good working order in perpetuity.

Reason: To ensure that the proposed development is satisfactorily drained in accordance with policies W SP1, W DM1, W DM2 and W DM3 of the Arun Local Plan. This is required to be a pre-commencement condition because it is necessary to implement the surface water drainage system prior to commencing any building works."

The proposed drainage system utilised a Rainwater Harvesting System (RWH) to re-use the surface water runoff in non-potable uses such as toilet flushing. Rainwater re-use is at the top of the SuDS hierarchy. However, as the RWH tank has a limited capacity of 7500 litres, this means that it may become overwhelmed if there are consecutive extreme storm events. Therefore, an overflow is required on the tank to enable excess surface water to discharge from the site without posing a flood risk to the development or to others.

HaskoningDHV UK Ltd. is part of Royal HaskoningDHV. Registered in England: 01336844. Registered office: Westpoint, Peterborough Business Park, Lynch Wood, Peterborough PE2 6FZ.
VAT registration number: 792428892

MANAGEMENT SYSTEM CERTIFICATION DNV ISO 9001 ISO 14001 ISO 45001

To address Condition 5, it was necessary to investigate infiltration as a means of managing the water from the RWH overflow.

Groundwater Monitoring

A borehole monitoring well was installed in the rear garden of the site to confirm typical groundwater levels. The groundwater monitoring report is included in **Appendix A**. This shows the ground conditions to be 'Made Ground' to a depth of 0.30m, with Beach Deposits comprising gravelly sandy clay beneath this, to a depth of 2.95m. Clayey gravelly sand is recorded at a depth of 3.00m.

The groundwater monitoring was agreed with the Council to be installed between 31st August 2023 until the 04th September 2023. The groundwater levels were between 1.75m to 1.90m below ground over this timeframe. Given the recordings were taken at the end of the summer, it is likely that groundwater levels could increase in the winter months, following extended periods of rainfall. This suggested that deeper forms of infiltration methods, such as soakaways, are unlikely to be viable as these require an unsaturated depth of 1m between the base of the soakaway and the peak groundwater level.

It should be noted that as the groundwater level is relatively high in this location, the RWH tank will need to be anchored to prevent it from floating on the groundwater when it is empty. This should be included in the RWH construction design.

Infiltration Testing

It was then necessary to carry out infiltration tests, to BRE365 standard, to determine whether shallower infiltration methods such as permeable surfaces would be viable. It was agreed with the Council that the infiltration tests should be carried out during the spring peak high tide in January 2024, which occurred on the 14th and 15th January. The tests were therefore carried out on the 15th January, at depths of 0.55m and 1.35m below ground level. These depths were selected as they avoided the 'Made Ground' and sat within the Beach Deposits. Groundwater levels from the monitoring well were recorded to be around 1.76m below ground on the day of the tests.

The test pits initially drained away but the fall in head was minimal after the first 100 minutes in each test pit. It was therefore not possible to carry out infiltration tests to BRE365 standard (i.e. completing three filles and drains), as the underlying soils quickly became saturated. As such, it was not possible to calculate or extrapolate an infiltration rate for the site. This testing confirmed that infiltration would not be a viable means of managing the overflow from the RWH tank. The infiltration test report is included in **Appendix B**.

Overflow to Adjacent Highway Drain

Site investigation and photographs identified a surface water drain located in the public footpath immediately adjacent to the site to the west. It is understood that the highway drain discharged to a soakaway located on the beach. A query was raised with the West Sussex County Council Highways to confirm whether this would be possible. West Sussex County Council Highways officer Lee Moses responded that they would not accept a connection from the overflow into the existing highways drain. This response is included in **Appendix C**.

Royal HaskoningDHV

Overflow to Beach

Groundwater monitoring and infiltration tests confirmed that infiltration methods are not viable on the site. Correspondence with West Sussex County Council Highways confirmed that a connection to the adjacent highways drain is not possible. Therefore, the only other alternative would be an overflow from the RWH tank over the rear property wall and onto the beach foreshore, via a pump. The Land Registry details are included in **Appendix D** which shows that the foreshore down to the high-water mark is within their red line boundary. A review of the Environment Agency's flood defence mapping confirms that the wall at the end of the rear garden does not form part of a sea defence, so it will not be necessary to obtain a Flood Risk Activity Permit to locate a pipe over the wall.

A 7,500 litre capacity RWH tank is proposed in the rear garden. The details of the proposed RWH system are included in **Appendix E**. This RWH system will receive surface water runoff from the site area, which is considered to be 100% impermeable. However, it is proposed that permeable surfacing will be used in the rear garden and front driveway, to allow infiltration to occur where possible (i.e. in day to day rainfall events). A surface water pipe will be located beneath the property to direct runoff from the driveway to the rear garden. This pipe will be co-ordinated with the foundation design and will be constructed in accordance with Building Regs Part H. An inspection chamber will be located at either then to enable inspection and maintenance of the pipe.

The drainage system has been designed assuming the whole site is impermeable, which results in a total impermeable area of 326m^2. To estimate the required overflow pump rate, the RWH tank was modelled as 7.17m^2 x 1.125m deep, with 0.475m cover. No outfall rate was modelled on the RWH tank, to simulate the system having reached capacity. The overflow was modelled as a pump set at the invert level of 3.475m AOD, which is 0.25m below the top of the RWH tank. A 1 in 100 year (+40%CC) storm event was then run, using the Source Control module of MicroDrainage. This demonstrated that a maximum pump rate of 6.00 l/s would be required to manage the 1 in 100 year (+40%CC) storm event, without resulting in flooding of the system. Therefore, it is proposed that the pumped overflow onto the beach is set to a maximum of 6.00 l/s.

The MicroDrainage calculations and proposed surface water drainage plan is included in **Appendix F**.

Please note the linear drain on the southern end of the driveway which will collect runoff from the front of the site and direct it into the onsite surface water drainage system, will result in an improvement compared to the existing situation whereby runoff from the driveway flows into the road and the highway drainage system.

Maintenance

Maintenance of the RWH system and the proposed overflow pump will be in line with the manufacturers details, which will be provided upon installation. If a servicing package is available, the Applicant should subscribe to this for regular inspections and maintenance of the system.

All drainage elements implemented on site should be inspected following the first rainfall event post-construction and monthly for the first quarter following construction. This should include a systematic review of the drainage infrastructure. Each element should be inspected to determine if remedial actions are needed. Where access chambers are provided, these should be used to access below ground infrastructure:

- Rodding eyes / inspection chambers will be provided at both ends of all pipes; these should be used to determine the level of silt within the system.
- A non-man entry inspection chamber will be provided on the RWH tank.

A commissioning survey will be undertaken to confirm that all elements of the surface water drainage system operate as per the design. This survey should include a CCTV survey of all below ground drainage assets. If any defects are identified, these should be rectified prior to use of the development. Should replacement of any element be required, this should be undertaken in accordance with the manufacturer's specifications, and in a planned and controlled manor.

I trust the details set out in this letter and the appendix address Condition 5 on surface water drainage and will enable this to be discharged. Please contact me directly with any queries on the proposed drainage system.

Yours sincerely,

[redacted]

Louisa Wade

Principal Flood Risk Consultant
Water & Maritime

Enc. Appendix A – Groundwater Monitoring Report
Appendix B – Infiltration Test Report
Appendix C – West Sussex County Council Highways Response
Appendix D – Land Registry Details
Appendix E – Rainwater Harvesting System Details
Appendix F – MicroDrainage Calculations and Proposed Surface Water Drainage Strategy

Royal HaskoningDHV
Enhancing Society Together

Appendix A – Groundwater Monitoring Report

8th September 2023

Our ref: GE21960/WH01/230908

Geo-Environmental

Mr & Mrs Caplin
Chase Stables,
Guildford Road,
Loxwood,
Billingshurst,
West Sussex,
RH14 0QW

Dear Mr & Mrs Caplin,

188 Elmer Road, Bognor Regis, PO22 6JA – Groundwater Monitoring

Further to your instruction, we write to present the findings of the intrusive works undertaken at the above site on the 22nd August 2023.

It is understood that the ground investigation was to inform the drainage strategy for the site. The site is proposed to be redeveloped with a residential property with private garden and parking and associated infrastructure.

Site Description

At the time of the investigation, the site comprised a two-storey detached residential property. A driveway was located to the north of the property, sloping down towards Elmer Road. The rear of the property consisted of a paved garden split over two levels. The southern half of the garden was c.0.5m higher than the northern half. A small concrete wall with steps in the centre, was situated at the end of the garden, leading directly onto the shingle beach.

A public access alleyway was located along the eastern boundary of the site, leading to the beach. Access to the rear garden was via a gate off the alleyway. The surrounding area to the north, east and west comprised further residential properties. Elmer beach and the English Channel was located immediately to the south.

Scope of Works

The works comprised the following:

- Attendance of a Geo-Environmental Engineer to set out and supervise the intrusive investigation and undertake logging of recovered soils from exploratory hole.
- Construction of 1No. dynamic sampler borehole to a depth of up to 3m bgl, or maximum achievable depth depending on drilling conditions, using a self-propelled track mounted rig. Casing would be required in order to achieve target depth.
- Installation of 1No. groundwater monitoring well to a depth of 3m to facilitate installation of an in-well data logger. The well would be completed with a lockable cover fitted flush with adjacent ground.
- Installation of a data logger from 1st – 3rd September inclusive. The data logger would allow for recovery of high quality groundwater data with readings to be taken every 15 minutes throughout the monitoring period. A barometric data logger to be installed within the garden.
- Spot monitoring of groundwater level within the standpipe and collection of the data logger.

The location of the borehole was agreed with the Client at the time of the investigation and advised by Royal HaskoningDHV.

ARUN DISTRICT COUNCIL M/12/24/DOC

Encountered Conditions

Published geological records indicated that the ground conditions were likely to comprise Beach Deposits.

The investigation encountered a thickness of Made Ground overlying Beach Deposits as summarised in Table 1 below.

Top (m bgl)	Base (m bgl)	Generalised Geology
0.00	0.12	**MADE GROUND:** Concrete slab over concrete.
0.12	0.30	**MADE GROUND:** Very soft brown slightly gravelly very sand silty clay with occasional organic material.
0.30	0.95	**BEACH DEPOSITS:** Very soft brown slightly gravelly very sandy silty CLAY with occasional organic material.
0.95	1.30	**BEACH DEPOSITS:** Very soft orangish brown very sandy silty CLAY with occasional gravel.
1.30	2.40	**BEACH DEPOSITS:** Light brown slightly gravelly very clayey SAND.
2.40	2.95	**BEACH DEPOSITS:** Very soft light brown very sandy silty CLAY with frequent orange staining and gravel.
2.95	3.00	**BEACH DEPOSITS:** Light brown slightly clayey gravelly SAND.

Table 1. Summary of Encountered Ground Conditions

For further details, reference should be made to the exploratory hole log appended.

Groundwater

Groundwater was encountered during the investigation at 3.0m bgl within the borehole, rising to 1.9m bgl by the time of the data logger installation (c.60 minutes).

Upon collection of the data loggers (04/09/23), the well was spot monitored, recording groundwater at 1.75m bgl.

Data Logging Probe Setup and Data Processing

The data logging probes were setup to take measurements every 15 minutes continuously between 12:00 31/08/23 – 12:00 04/09/23.

Using the software Win-Situ 5, the raw pressure data obtained from the data logger has been corrected using the barometric pressure readings from the baro-logger installed on the site. The data set was then processed further using the "post level correction" function in Win-Situ 5. This correlates the groundwater from a known reference level i.e. the water level measured during the return visit.

Continuous Time Series

Once the data processing was completed, the data set was plotted as presented in Figure 3.

We trust we have interpreted your request correctly and provided sufficient information for your current requirements.

If you have any questions or queries in relation the information provided at this stage, please let us know.

Yours sincerely
For and on Behalf of Geo-Environmental

[redacted]

WILLIAM HUGHES MGeol (Hons), MSc, FGS
Senior Consultant Engineer
[redacted]

Enc Figure 1 – Site Location Plan
Figure 2 – Investigation Plan
Figure 3 – Continuous Time Series Ground Water Level Graph
Exploratory Hole Log

Project Title:	**188 Elmer Road**	**Title :**	**Figure 1 - Site Location Plan**
Location :	**Bognor Regis, PO22 6JA**	**Scale:**	**1:2000**
Project No. :	**GE21960**	**Engineer:**	**WH**
Client :	**Mr & Mrs Caplin**		

Geo-Environmental

Legend Key

Project Bounds - Project Bounds



Project Title:	**188 Elmer Road**	**Title :**	**Figure 2 - Exploratory Hole Location Plan**
Location :	**Bognor Regis, PO22 6JA**	**Scale:**	**1:500**
Project No. :	**GE21960**	**Engineer:**	**WH**
Client :	**Mr & Mrs Caplin**		

Geo-Environmental

Legend Key

Locations By Type - WLS



ARUN DISTRICT COUNCIL M/12/24/DOC

Figure 3 - Continuous Time Series - WS01

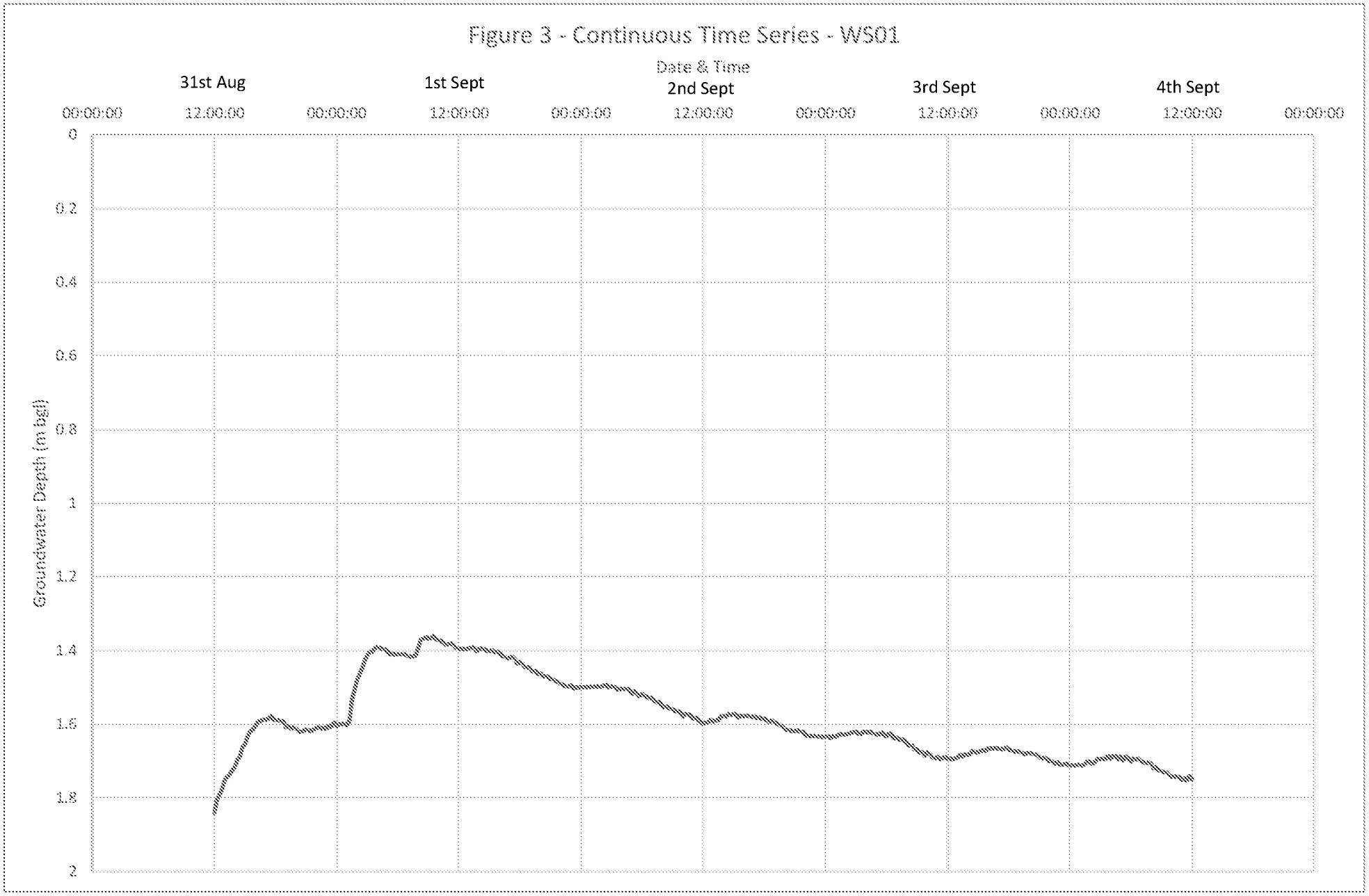

Geo-Environmental
Unit 7, Danworth Farm
Hurstpierpoint
BN6 9GL
www.gesl.net

Borehole Log

Borehole No. **WS01**
Sheet 1 of 1

Project Name:	188 Elmer Road	Project No. GE21960	Co-ords: 498592E - 100024N
Location:	Bognor Regis, PO22 6JA		Level:
Client:	Mr & Mrs Caplin		Dates: 22/08/2023

Hole Type: WLS
Scale: 1:25
Logged By: WH

Well	Water Strikes	Sample and In Situ Testing: Depth (m)	Type	Results	Depth (m)	Level (m)	Legend	Stratum Description
					0.04			Concrete slab MADE GROUND
					0.12			Concrete MADE GROUND
					0.30			Very soft brown slightly gravelly very sandy silty clay with occasional black organic material. Gravel comprises rounded flint with occasional brick MADE GROUND
		0.50	D					
		0.50	PP	0.3kg/cm2				Very soft brown slightly gravelly very sandy silty CLAY with occasional black organic material. Gravel comprises rounded flint BEACH & TIDAL FLAT DEPOSITS
					0.95			
		1.00	D					Very soft orangish brown very sandy silty CLAY with occasional rounded flint gravel BEACH & TIDAL FLAT DEPOSITS
		1.00	PP	0.1kg/cm2				
					1.30			Light brown slightly gravelly very clayey SAND. Gravel comprises rounded flint and chalk BEACH & TIDAL FLAT DEPOSITS
		1.50	D					
		2.00	D					
					2.40			Very soft light brown very sandy silty CLAY with frequent orange staining and gravel. Gravel comprises sub-rounded to rounded flint and chalk BEACH & TIDAL FLAT DEPOSITS
		2.50	D					
		2.50	PP	0.2kg/cm2				
					2.95			
		3.00	D		3.00			Light brown slightly clayey gravelly SAND. Gravel comprises sub-rounded to rounded flint and chalk BEACH & TIDAL FLAT DEPOSITS
								End of Borehole at 3.00m

Dynamic Sampling Run Details			Water Strike Details (mbgl)		Remarks
Depth Top	Depth Base	Diameter	Depth Strike	Rose To	Handpit to 1.1m Data logger installed
			3.00	1.90	

AGS
Status
FINAL

Royal HaskoningDHV
Enhancing Society Together

Appendix B – Infiltration Test Report

24th January 2024

Our ref: GE22252/WH01/240124

Geo-Environmental

Mr & Mrs Caplin
Chase Stables,
Guildford Road,
Loxwood,
Billingshurst,
West Sussex,
RH14 0QW

By Email Only

Dear Mr & Mrs Caplin,

RE: 188 Elmer Road, Bognor Regis, PO22 6JA – Soakage Testing

Further to your instruction, we write to present the results of the soakage testing undertaken at the above site. The soakage tests were undertaken in broad accordance with BRE Digest 365 'Soakaway Design' BRE, 2016 with the testing limited to a one-day period.

A Geo-Environmental engineer attended the site on 15th January 2024 to undertake the intrusive investigation to coincide with the spring tide. Two hand excavated trial pits (HP01 & HP02) were completed to depths of 1.35m bgl and 0.55m bgl respectively, to assess ground and groundwater conditions and soakage infiltration rates. The exploratory hole locations are shown on Figure 2.

Geo-Environmental Services Limited have previously undertaken an investigation on the site in August 2023 (ref: GE21960/WH01/230908), encountering Made Ground overlying Beach Deposits to a depth of 3.0m bgl, and installing a monitoring well within the borehole.

Site Description

At the time of the investigation, the site comprised a two-storey detached residential property. A driveway was located to the north of the property, sloping down towards Elmer Road. The rear of the property consisted of a paved garden split over two levels. The southern half of the garden was c.0.5m higher than the northern half. A small concrete wall with steps in the centre, was situated at the end of the garden, leading directly onto the shingle beach.

A public access alleyway was located along the eastern boundary of the site, leading to the beach. Access to the rear garden was via a gate off the alleyway. The surrounding area to the north, east and west comprised further residential properties. Elmer beach and the English Channel was located immediately to the south.

Scope of Works

The works comprised the following:

- Attendance of a Geo-Environmental Engineer to set out and supervise the intrusive investigation, undertake sampling, in-situ testing and logging of soils recovered from exploratory holes.
- Excavation using hand tools of 2No. pits to provisional depths of 0.5m and 1.3m bgl.

ARUN DISTRICT COUNCIL M/12/24/DOC

- Undertake trial pit soakage tests in general accordance with BRE Digest 365. BRE Digest 365 requires three consecutive filling and drainage cycles to be completed. In many UK soils, it is not possible to complete three test cycles within a single day.

The broad location of the pits was outlined by Royal HaskoningDHV, with exact locations determined at the time of the investigation. Target depths were also specified by Royal HaskoningDHV.

Ground Conditions

The ground conditions encountered comprised a mantle of Made Ground overlying Beach Deposits. A generalised summary of the encountered ground conditions is presented in Table 1.

Top (m bgl)	Base (m bgl)	Generalised Geology	Locations
0.00	0.14	**MADE GROUND:** Concrete slab over concrete.	All
0.14	0.29 - 0.38	**MADE GROUND:** Very soft dark brown slightly gravelly sandy silty clay with occasional organic material.	All
0.29 - 0.38	>0.55 - 0.70	**BEACH DEPOSITS:** Very soft brown slightly gravelly very sandy silty CLAY with occasional organic material.	All
0.70	1.25	**BEACH DEPOSITS:** Very soft orangish brown very sandy silty CLAY with occasional gravel.	HP01
1.25	1.35	**BEACH DEPOSITS:** Brown slightly gravelly very clayey SAND.	HP01

Table 1 Summary of Encountered Ground Conditions

For further details, reference should be made to the exploratory hole logs appended.

Groundwater

No groundwater was recorded within the hand pits during the investigation. The monitoring well previously installed within WS01 was monitored during the testing. Groundwater levels were recorded between 1.76m and 1.77m bgl during this time period (three hours).

Soakage Testing

Soakage testing was undertaken broadly in accordance with BRE Digest 365 Soakaway Design within two hand excavated trial pits. Testing was undertaken in HP01 at 1.35m bgl and HP02 at 0.55m bgl. Due to the limited time on site (one day) and the slow rate of infiltration, three filling and drainage cycles were not possible.

The rate of infiltration within HP01 was promising (0.32m) during the initial 100 minutes of the test. However, the infiltration rate decreased drastically after this point, with only a 0.02m fall in head recorded over the proceeding 150 minutes. This is likely due to saturation of the underlying soils. As such, it is considered that there was insufficient fall in head to calculate or confidently extrapolate an infiltration rate. Furthermore, there was insufficient fall in head recorded within HP02 (0.01m after 247 minutes) to calculate or extrapolate an infiltration rate.

The testing undertaken indicates that the deeper gravelly clayey sands of the Beach Deposits may provide suitable infiltration rates for soakage but are likely to quickly become saturated and storage capacity may be limited due to groundwater levels and tidal influence. The shallower sandy clays of the Beach Deposits are not considered tp have suitable soakage potential.

Closure

We trust that we have interpreted your instructions correctly, and please do not hesitate to contact us should you have any queries.

Yours sincerely
For and on Behalf of Geo-Environmental

[redacted]

William Hughes MGeol (Hons), MSc, FGS
Senior Consultant Engineer

[redacted]

Enc Figure 1 Site Location Plan
Figure 2 Investigation Plan
Exploratory Hole Logs
Soakage Data

Project Title:	**188 Elmer Road**	**Title :**	**Figure 1 - Site Location Plan**
Location :	**Bognor Regis, PO22 6JA**	**Scale:**	**1:2000**
Project No. :	**GE21960**	**Engineer:**	**WH**
Client :	**Mr & Mrs Caplin**		

Geo-Environmental

Legend Key

Project Bounds - Project Bounds



Project Title:	**188 Elmer Road**	**Title :**	**Figure 2 - Exploratory Hole Location Plan**
Location :	**Bognor Regis, PO22 6JA**	**Scale:**	**1:500**
Project No. :	**GE22252**	**Engineer:**	**WH**
Client :	**Mr & Mrs Caplin**		

Geo-Environmental

Legend Key

- Locations By Type - Empty
- Locations By Type - IP



Geo-Environmental	Unit 7, Danworth Farm Hurstpierpoint BN6 9GL www.gesl.net	**Trial Pit Log**
		TrialPit No HP01 Sheet 1 of 1

Project Name: 188 Elmer Road	Project No. GE22252	Co-ords: 498594.34 - 100022.11 Level:	Date 15/01/2024
Location: Bognor Regis, PO22 6JA		Dimensions (m): Depth 1.35	Scale 1:10
Client: Mr & Mrs Caplin			Logged WH

Water Strike	Samples & In Situ Testing			Depth (m)	Level (m)	Legend	Stratum Description
	Depth	Type	Results				
				0.04			Concrete slab MADE GROUND
							Concrete MADE GROUND
				0.14			Very soft dark brown slightly gravelly sandy silty clay with occasional black organic material. Gravel comprises rounded flint with occasional brick and wood MADE GROUND
				0.38			Very soft brown slightly gravelly sandy silty CLAY with occasional black organic material. Gravel comprises rounded flint BEACH & TIDAL FLAT DEPOSITS
				0.70			Very soft orangish brown very sandy silty CLAY with rare fine to medium rounded flint gravel BEACH & TIDAL FLAT DEPOSITS
				1.25			Brown slightly gravelly very clayey SAND. Gravel comprises rounded flint BEACH & TIDAL FLAT DEPOSITS
				1.35			End of Pit at 1.35m

1

2

Water Strike Details (mbgl)			
Depth	Rose To	Remarks	
		Stability	Localised spalling

AGS

Geo-Environmental	Unit 7, Danworth Farm Hurstpierpoint BN6 9GL www.gesl.net	**Trial Pit Log**

TrialPit No: HP02
Sheet 1 of 1

Project Name: 188 Elmer Road	Project No. GE22252	Co-ords: 498596.12 - 100021.64 Level:	Date 15/01/2024
Location: Bognor Regis, PO22 6JA		Dimensions (m): Depth 0.55	Scale 1:10
Client: Mr & Mrs Caplin			Logged WH

Water Strike	Samples & In Situ Testing: Depth	Type	Results	Depth (m)	Level (m)	Legend	Stratum Description
				0.04			Concrete slab MADE GROUND
							Concrete MADE GROUND
				0.14			Very soft dark brown slightly gravelly sandy silty clay with occasional black organic material. Gravel comprises rounded flint with occasional brick MADE GROUND
				0.29			Very soft dark brown slightly gravelly very sandy silty CLAY with occasional black organic material. Gravel comprises rounded flint BEACH & TIDAL FLAT DEPOSITS
				0.55			End of Pit at 0.55m

1

2

Water Strike Details (mbgl)	
Depth	Rose To

Remarks:

Stability: Sides stable

AGS

HP01	
Minutes	Water Depth (m bgl)
0	0.43
1	0.44
2	0.44
3	0.44
4	0.44
5	0.45
7	0.45
10	0.45
15	0.47
35	0.54
45	0.57
55	0.61
70	0.66
85	0.71
100	0.75
115	0.75
130	0.75
145	0.75
160	0.76
175	0.76
190	0.77
205	0.77
220	0.77
235	0.77
250	0.77

HP02	
Minutes	Water Depth (m bgl)
0	0.30
1	0.30
2	0.30
3	0.30
4	0.30
5	0.30
7	0.30
10	0.30
17	0.30
27	0.30
37	0.30
52	0.30
67	0.30
82	0.30
97	0.30
112	0.30
127	0.30
142	0.30
157	0.30
172	0.30
187	0.31
202	0.31
217	0.31
232	0.31
247	0.31

Royal HaskoningDHV
Enhancing Society Together

Appendix C – West Sussex County Council Highways Response

From: Lee Moses
To: Louisa Wade
Cc: Caplin, Clive; Sam Caplin; Andrew Howick; Sarah Burrow
Subject: RE: Proposed Overflow to Highways Drain: 188 Elmer Road, Bognor Regis
Date: 30 January 2024 16:35:33
Attachments: image008.png

You don't often get email from lee.moses@westsussex.gov.uk. Learn why this is important

Hi Louise,

Thank you for providing a drawing, I have spoken to our drainage team and they will not accept an overflow connection into the WSCC system. They have suggested that being so close to the beach an alternative solution could be found.

Kind regards

Lee Moses MIHE
Senior Engineer, Highway Agreements,
Planned Delivery.
West Sussex County Council.

CALL IM EMAIL
Location: Ground Floor Northleigh, County Hall, Chichester, West Sussex, PO19 1RH
[redacted]

From: Louisa Wade <[redacted]>
Sent: Tuesday, January 30, 2024 12:27 PM
To: Lee Moses <Lee.Moses@westsussex.gov.uk>
Cc: Caplin, Clive <[redacted]>; Sam Caplin <[redacted]>; Andrew Howick <andrew.howick@westsussex.gov.uk>
Subject: Proposed Overflow to Highways Drain: 188 Elmer Road, Bognor Regis

****EXTERNAL****

Hi Lee,

Thank you for your email. I have attached a mark up plan to this email (on the left hand side). This shows the proposed rainwater harvesting tank in front of the house with an overflow to the manhole labelled MH6 on the plan. I also attach a photo of MH6. Please note, the majority of the runoff from the proposed development will be captured in the rainwater harvesting tank and re-used, so the only water discharging to the highways drain will be in extreme events when the rainwater harvesting tank capacity is exceeded and water discharges via the overflow. This is considered to be a betterment compared to the existing situation in which all of the runoff from the site makes its way into the highways drain via the road gullies. There will be a gravity outfall from the RWH overflow to the manhole as we understand that the invert level of the manhole is over 2m below ground level.

Please can you confirm whether it would be acceptable to have the overflow from the RWH tank to the existing highways manhole MH6?

Do you hold any details of the highways drain in this footpath and the manholes? If so please could you provide these to me so that I can update our drainage drawing accordingly.

Please let me know if you have any questions. If you wish to discuss this with Clive and Sam Caplin, they have informed me that they would be happy to meet you on site.

Kind regards

Louisa Wade BSc (Hons), MSc, MCIWEM C.WEM
Principal Flood Risk Consultant, Water and Maritime

[redacted]
HaskoningDHV UK Ltd., a company of Royal HaskoningDHV | 2nd Floor, 15 Bermondsey Square, London, SE1 3UN, United Kingdom
Registered Office: Westpoint, Peterborough Business Park, Peterborough PE2 6FZ | Registered in England 1336844

Royal HaskoningDHV
Enhancing Society Together

From: Lee Moses <Lee.Moses@westsussex.gov.uk>
Sent: Tuesday, January 30, 2024 11:24 AM
To: Sarah Burrow <Sarah.Burrow@arun.gov.uk>; Louisa Wade <[redacted]
Cc: Kathryn Welch <Kathryn.Welch@arun.gov.uk>; Paul Cann <Paul.Cann@arun.gov.uk>; Karl Mclaughlin <Karl.Mclaughlin@arun.gov.uk>; Caplin, Clive <[redacted]; Sam Caplin [redacted]; Andrew Howick <andrew.howick@westsussex.gov.uk>
Subject: RE: Infiltration Test Results GE22252: 188 Elmer Road, Bognor Regis

You don't often get email from lee.moses@westsussex.gov.uk. Learn why this is important

Hi Louisa,

Please can you send me over a plan and I can take a look?

Sarah – Thanks for sending.

Kind regards

Lee Moses MIHE
Senior Engineer, Highway Agreements,
Planned Delivery.
West Sussex County Council.

CALL IM EMAIL
Location: Ground Floor Northleigh, County Hall, Chichester, West Sussex, PO19 1RH
Contact: Internal: 22088 | External: +44 (0)330 2222088 | E-mail: lee.moses@westsussex.gov.uk

---

From: Sarah Burrow <Sarah.Burrow@arun.gov.uk>
Sent: Tuesday, January 30, 2024 10:19 AM
To: Louisa Wade <[redacted]

Royal HaskoningDHV
Enhancing Society Together

Appendix D – Land Registry Details

H.M. LAND REGISTRY

TITLE NUMBER	
WSX154991	

ORDNANCE SURVEY PLAN REFERENCE	COUNTY	SHEET	NATIONAL GRID	SECTION
	WEST SUSSEX		SU 9800	A

Scale: 1/1250 ARUN DISTRICT

© Crown Copyright 1987.

Old Reference LXXIV 4 A

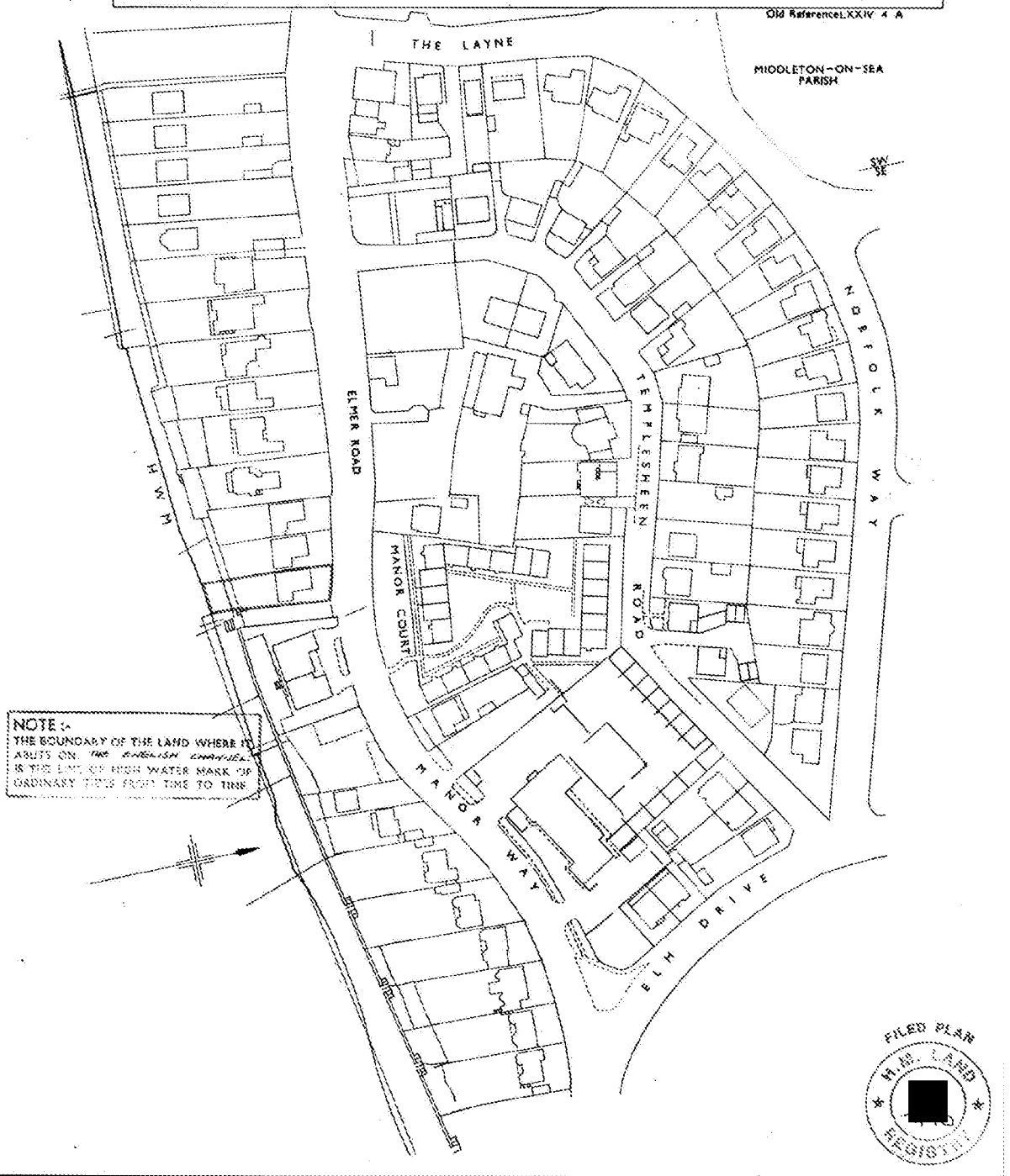

Royal HaskoningDHV
Enhancing Society Together

Appendix E – Rainwater Harvesting System Details

RainWater Harvesting Limited

Installation Manual for the F-Line underground tank

1,500 litre
3,000 litre
5,000 litre
7,500 litre

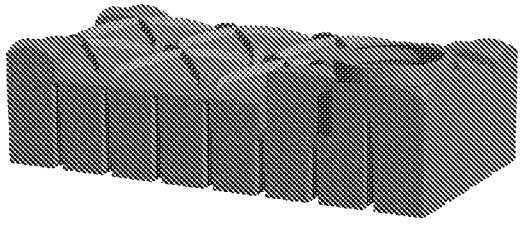

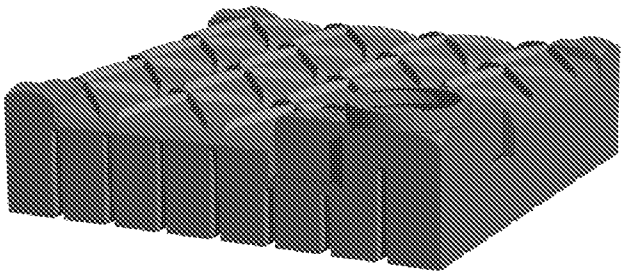

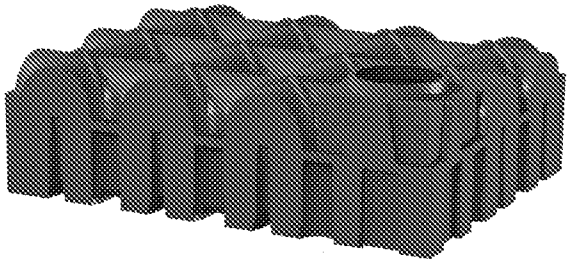

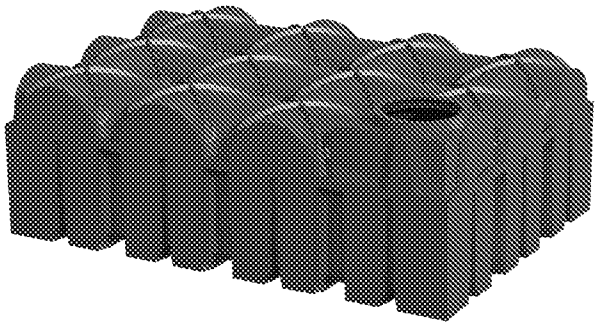

Rainwater Harvesting Limited, Unit A Harrier Park, Southgate Way, Orton Southgate, Peterborough, PE2 6YQ,UK

[redacted]

ARUN DISTRICT COUNCIL M/12/2

Tank Dimensions and inverts

With the tank you will have received one of three different shafts dependent on your order. Please note which has been received and refer to the relevant shaft in the grid below :

- VS20 – 235mm shaft and pedestrian lid
- VS60 – 635mm shaft and pedestrian lid - The overall height difference below is because up to 400mm can be cut off the 635mm shaft on site so as to achieve your exact invert level
- Driveable shaft & lid – Steel lid and shaft for vehicle loading

	1500 L	3000 L	5000 L	7500 L
Weight KG	80	170	250	310
Length	2400	2400	2960	3340
Width	1200	2400	2220	2310
Overall Height (VS20 – 235mm shaft)	1015	1015	1350	1415
Overall Height (VS60 – 635mm shaft)	1015 – 1415	1015 – 1415	1350 – 1750	1415 – 1815
Overall Height (Driveable shaft and lid)	1415	1415	1750	1815
Ground to Invert (VS20 – 235mm shaft)	320	320	345	310
Ground to Invert (VS60 – 635mm shaft)	320 – 720	320 – 720	345 – 745	310 – 710
Ground to Invert (Driveable shaft & lid)	720	720	745	710
Invert to Outlet	162	162	162	162

Excavation

	1500 L	3000 L	5000 L	7500 L
Length	2800	2800	3360	3740
Width	1600	2800	2620	2710
***Overall Height VS20**	1115	1115	1450	1515
***Overall Height VS60**	1115 – 1515	1115 – 1515	1450 – 1850	1515 – 1915
***Overall Height Driveable shaft & lid**	1515	1515	1850	1915

***The overall excavated height allows for a base of 100mm compacted aggregate**

Rainwater Harvesting Limited, Unit A Harrier Park, Southgate Way, Orton Southgate, Peterborough, PE2 6YQ,UK

Em [redacted]

1. Location

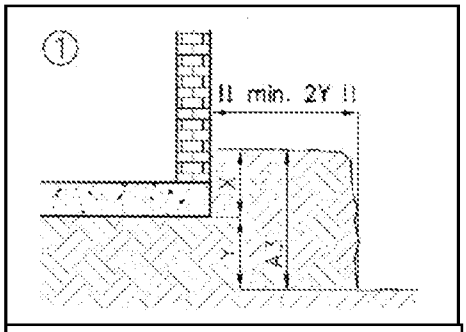

Please refer to the table on Page 2. A3 relates to the 'Excavated Overall Height' dependent on shaft and tank type

1.1 Position to the building

- The excavation must not be within the minimum distance to the building. See Image 1.
- The tank may not be built over by any loads greater than vehicle loads.

1.2 Traffic Conditions

- Loading Class A15 e.g pedestrian or cyclist – The standard pedestrian lid is suitable.
- Loading Class B e.g car, minibus, max axle load of 2.2 tonnes – Vehicle loading shaft and lid required. Minimum distance from top of tank body to earth surface must be 600mm

1.3 Ground conditions

- The tanks may lie in ground water and / or surface water up to the top of the body of the tank. Please refer to the table below to see the maximum depth dependent on your tank and shaft type.

	1500 L	3000 L	5000 L	7500 L
Max water table depth (VS20 – 235mm shaft)	365	365	430	290
Max water table depth (VS60 – 635mm shaft)	365 - 765	365 – 765	430 - 830	290 - 690
Max water table depth (Driveable shaft & lid)	765	765	830	690

1.4 Hillside location

- The soil within the area where the tank is to be positioned must be checked for possible soil movement (DIN 1054 edition 1/2003, E DIN 4084 edition 11/2002) and if necessary will need to be secured with a supporting structure (eg retaining wall)
- Consultation with local authorities is recommended.

1.5 Installation details

1.51 In clay ground conditions:

- The excavated area should be wide enough to allow the compression of the filling material (200mm) See Image below.

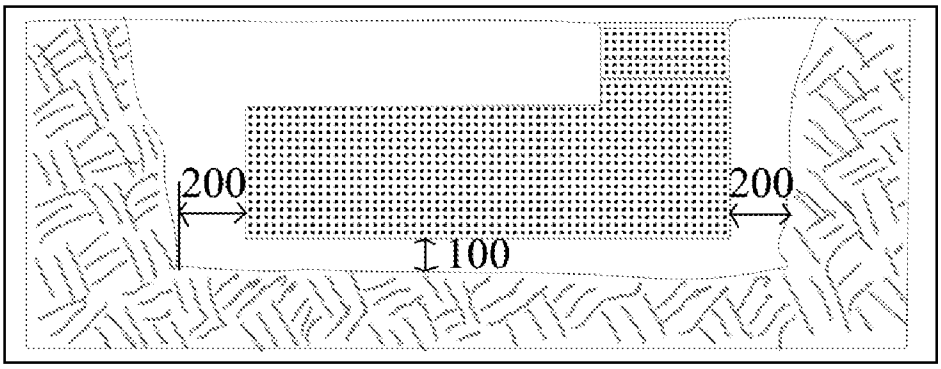

- With installations deeper than 1.75m (ground to base of tank) use 500mm width of the filling material.
- The tank should be covered with at least 300mm of filling material.

1.52 In loose ground conditions:

- Up to 1.75m depth of excavation use 200mm of filling material around the sides of the tank.
- With installations deeper than 1.75m use 500mm width of the filling material
- The tank should be covered with at least 300mm of filling material

1.6 Further criteria

- Existing pipelines, pipes, vegetation and other specifics must be considered so that damage or hazards will be avoided.
- The maximum soil coverage on top of the tank body is 1.5m
- If it is not guaranteed that the ground water level will remain below the permitted maximum level, a drainage system must be installed around the tank, which reliably drains the water. If a drainage system is not possible then contact your supplier about an alternative tank.

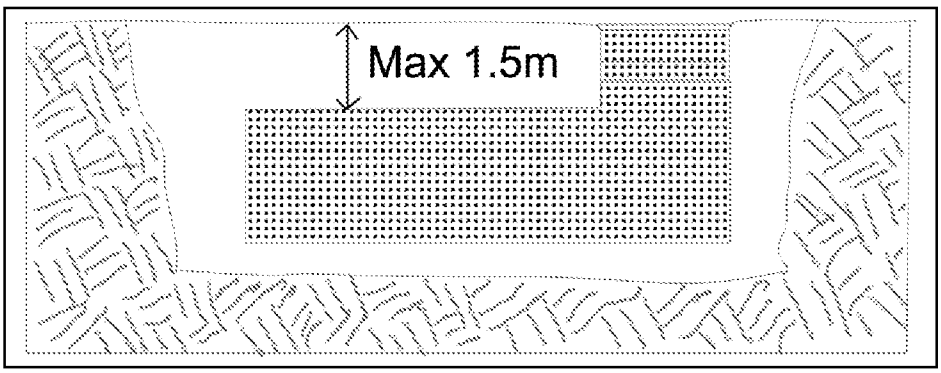

Rainwater Harvesting Limited, Unit A Harrier Park, Southgate Way, Orton Southgate, Peterborough, PE2 6YQ,UK

E [redacted]

2. Installation

2.1 Backfill around and below the tank

- Backfill material around the tank has to be well compacted and permeable to water allowing close packing and no damage to the surface of the tank
- If the filling material contains sharp of sharp-edged components, the wall of the tank must be protected by a sandy coating.

2.1.1
- Gravel mixtures are the preferred filling material. The recommended sizes 8mm-16mm

2.1.2
- Concrete gravel with a particle size of up to 16mm is recommended for use in clay / loam soil conditions with ground water and high water table.
- When ground water and a high water table are present it is important to ensure good compaction when applying the filling material.

2.1.3
- Stone Chippings – crushed rock particles between 4mm and 16mm in size are suitable filling material. However due to the sharp edges the tank must be protected against damage, for example using a sand coating.

2.1.4
- Excavation – sand and gravel mixtures with mixed particle sizes is suitable as a filling material providing they meet the criteria listed under 2.1

2.1.5
- Top soil, clay, loam and other types of cohesive soils are not suitable as filling material.

2.2 Backfill on top of the tank
- Excavated soil or other material can be used if it is stable and permeable

2.3 Backfilling and compaction methods
- The backfilling and compaction methods to be used are described in Section 3 (Installation Instructions)

2.3.1
- Adding water to the filling material is not recommended as this will make the compacting unstable
- The base layer for driveable situations must use a grain size of 2/45

2.4 Pipes
2.4.1
- The feed pipe should be laid with a fall to the tank of greater than 1 degree
- Ensure that underground rainwater pipes come from sealed gullies (do not use open gullies)

2.4.2
- The overflow pipe / drain pipe should have a deeper fall away from the tank than the fall from the feed pipe to the tank

2.4.3
- The service pipe is to be installed using the provided seals to ensure a tight fixture to avoid contaminants entering the tank. All electrical and other cables are laid through this service pipe back to the property.

2.4.4
- The pipes must be laid in such a way to avoid frost damage.

3. Installation Instructions

1. Establish distance from the property.

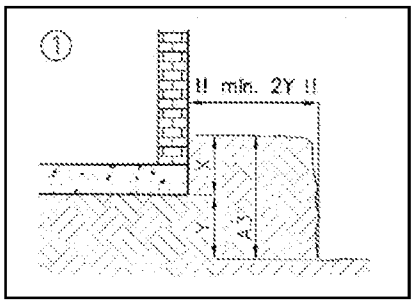

2. Dig hole

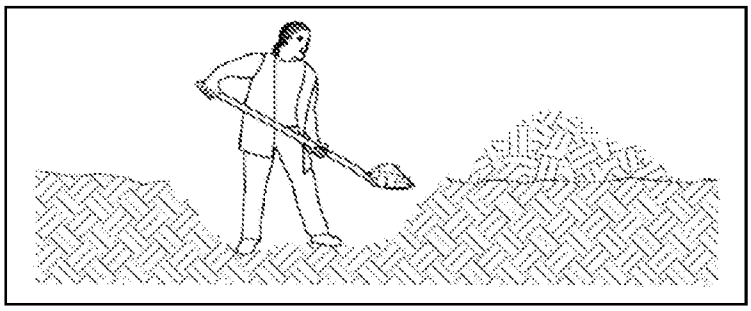

3. Lay 100mm base

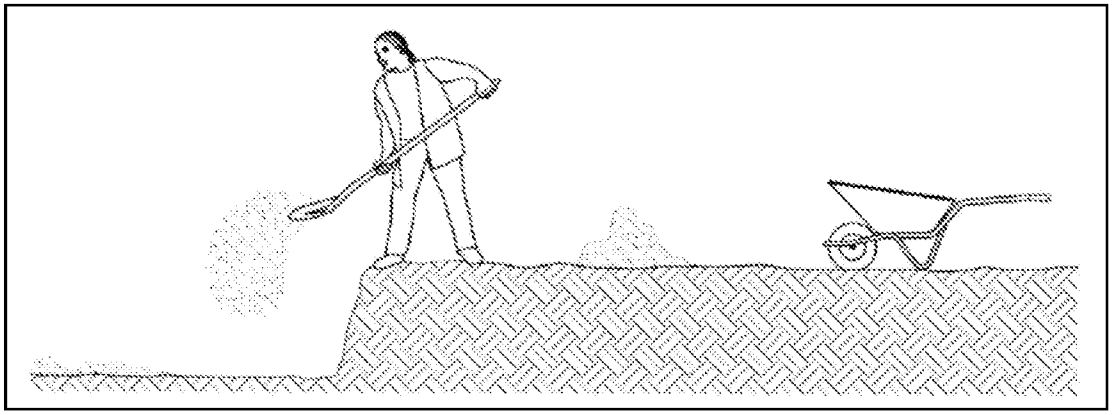

4. Compact the base by hand only. Ensure you have a level base.

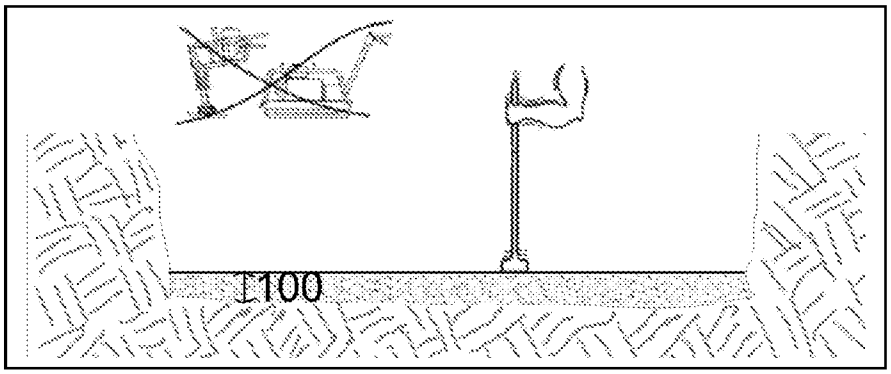

Rainwater Harvesting Limited, Unit A Harrier Park, Southgate Way, Orton Southgate, Peterborough, PE2 6YQ,UK

[redacted]

ARUN DISTRICT COUNCIL M/12/24

5. **Lower the tank carefully into the hole ensuring that you are achieving the necessary widths around the tank for the filling material.**

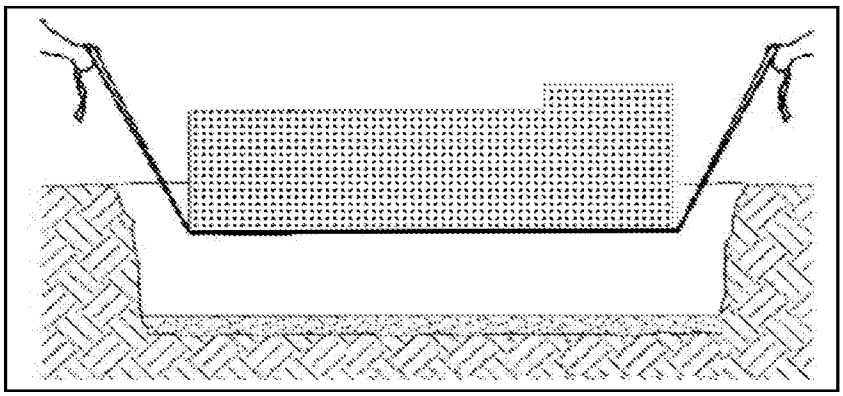

6. **Fill the tank with water up to half way**

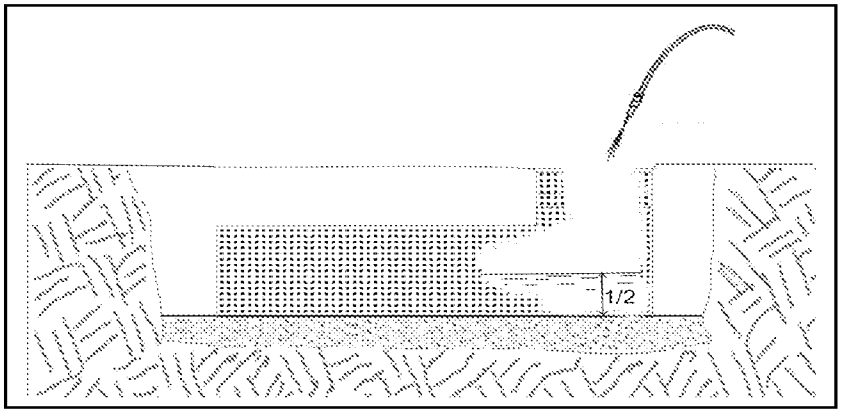

7. **Apply filling material**

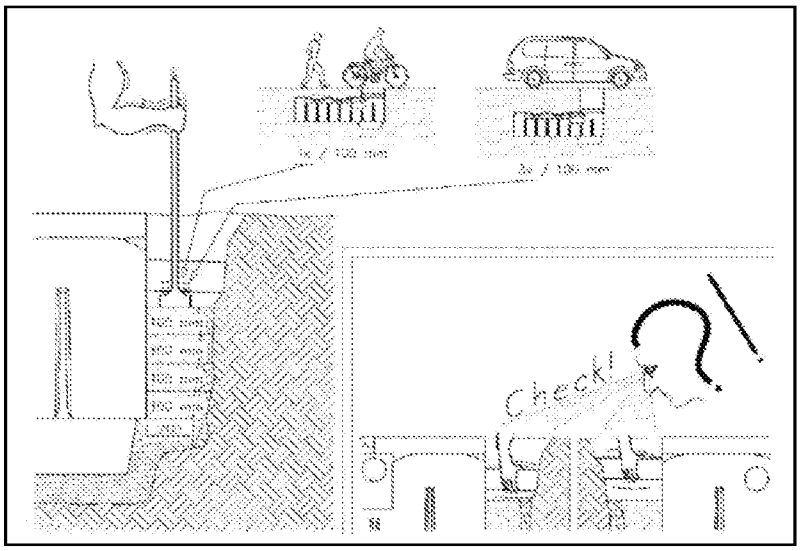

- Do not use a mechanical whacker plate.
- Hand tap the material to compress it.
- Lay in 100mm layers for pedestrian install
- Lay in 300mm layers for driveable install
- Check to ensure the minimum width between the tank and excavation wall is correct (min 200mm)

[redacted]

ARUN DISTRICT COUNCIL M/12

8. **Hand compress the filling material into the central columns**

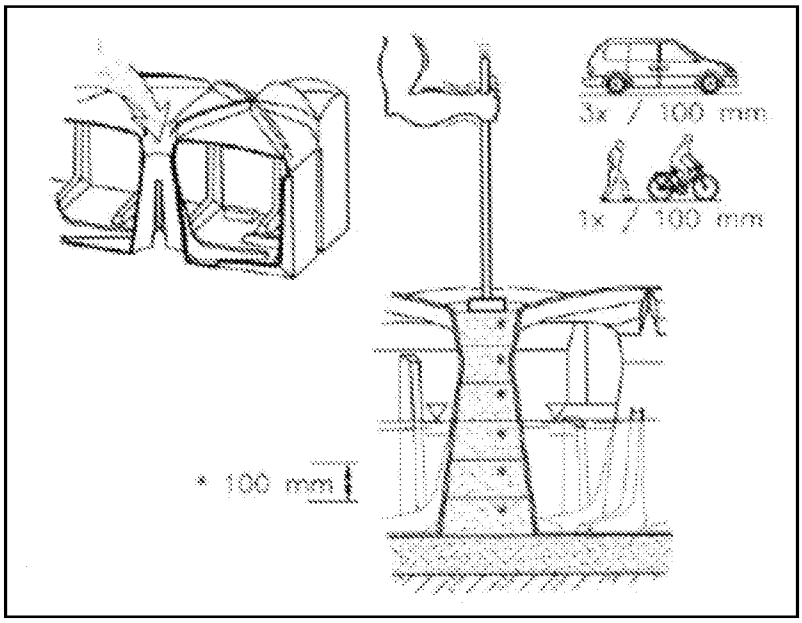

To link tanks together do the following:

- Drill a hole using a 127mm drill bit into a flat part of the tank at low level.
- Insert the supplied grommets (seals) into the hole.
- Feed a 4" pipe into the hole allowing at least 500mm to be inside of the tank.
- Use washing up liquid if necessary to assist with pushing the pipe through the grommet.

NOTES :

- **Please refer to the individual installations documents for the shafts, extension sleeve and driveable shaft and lid.**

[redacted]

ARUN DISTRICT COUNCIL M/12/

RainWater Harvesting Limited

Tank dimensions and hole positions

1500L F-Line

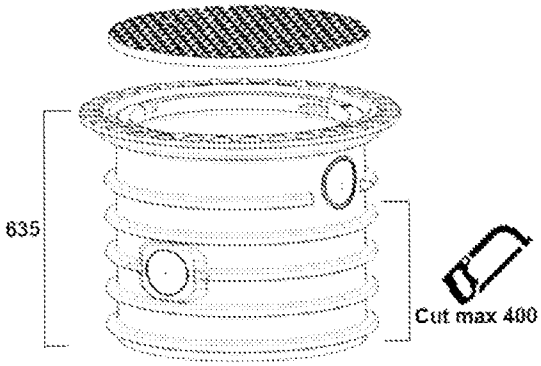

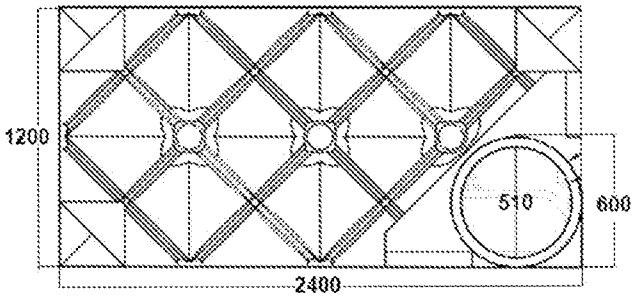

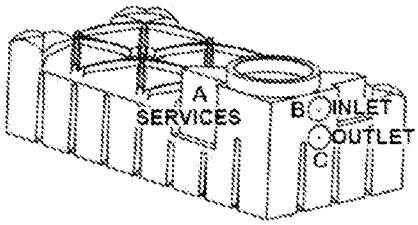

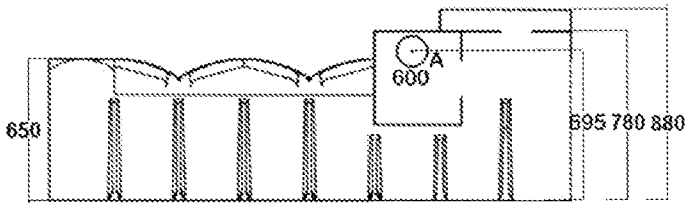

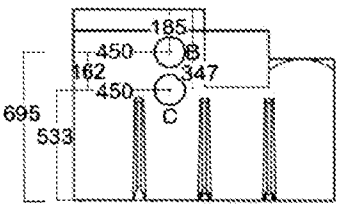

[redacted]

ARUN DISTRICT COUNCIL M/12/24/D

RainWater Harvesting Limited

3000L F-Line

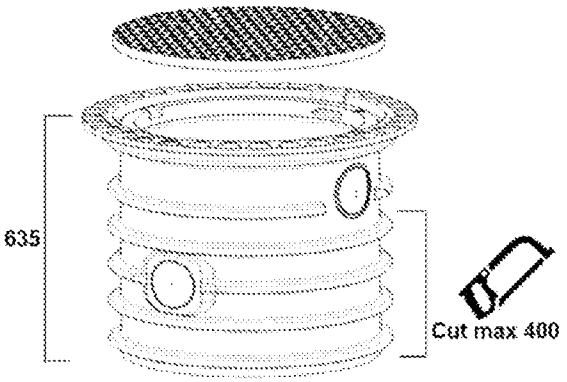

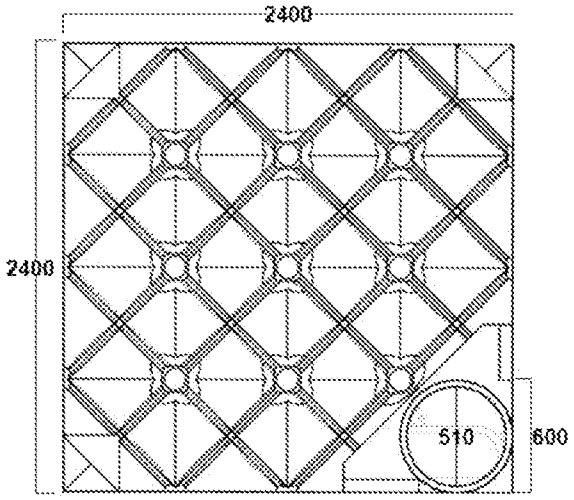

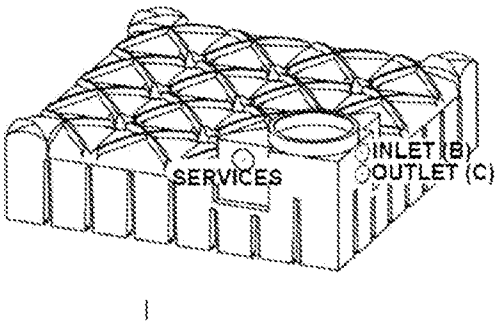

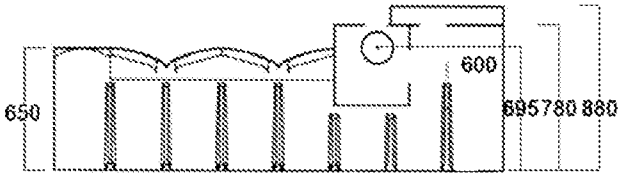

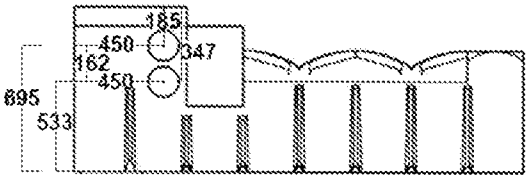

Rainwater Harvesting Limited, Unit A Harrier Park, Southgate Way, Orton Southgate, Peterborough, PE2 6YQ,UK

[redacted]

ARUN DISTRICT COUNCIL M/12

RainWater Harvesting Limited

5000L F-Line

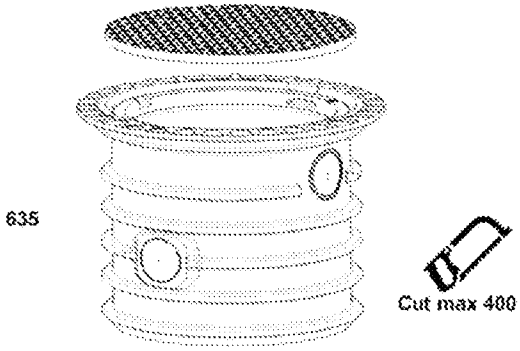

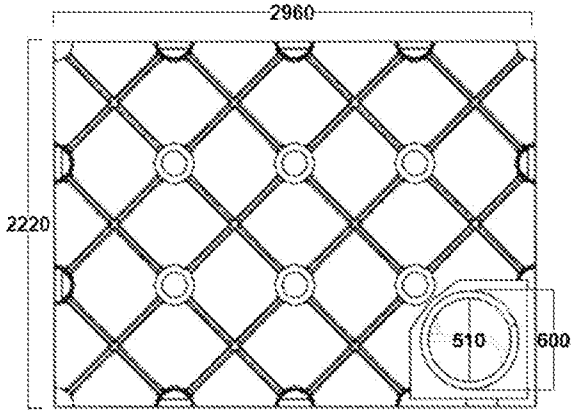

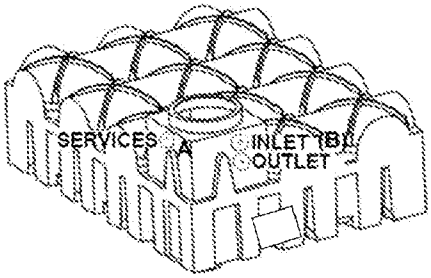

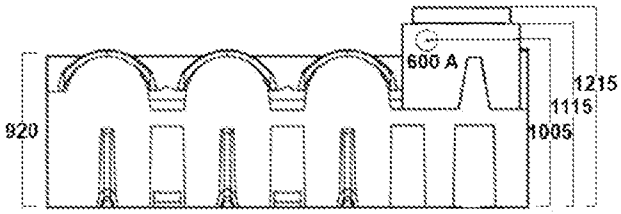

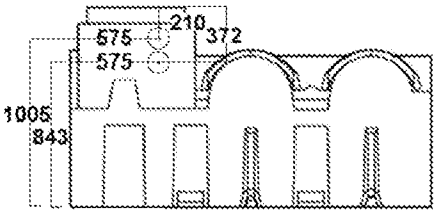

Rainwater Harvesting Limited, Unit A Harrier Park, Southgate Way, Orton Southgate, Peterborough, PE2 6YQ UK

Ema[redacted]

RainWater Harvesting Limited

7500L F-Line

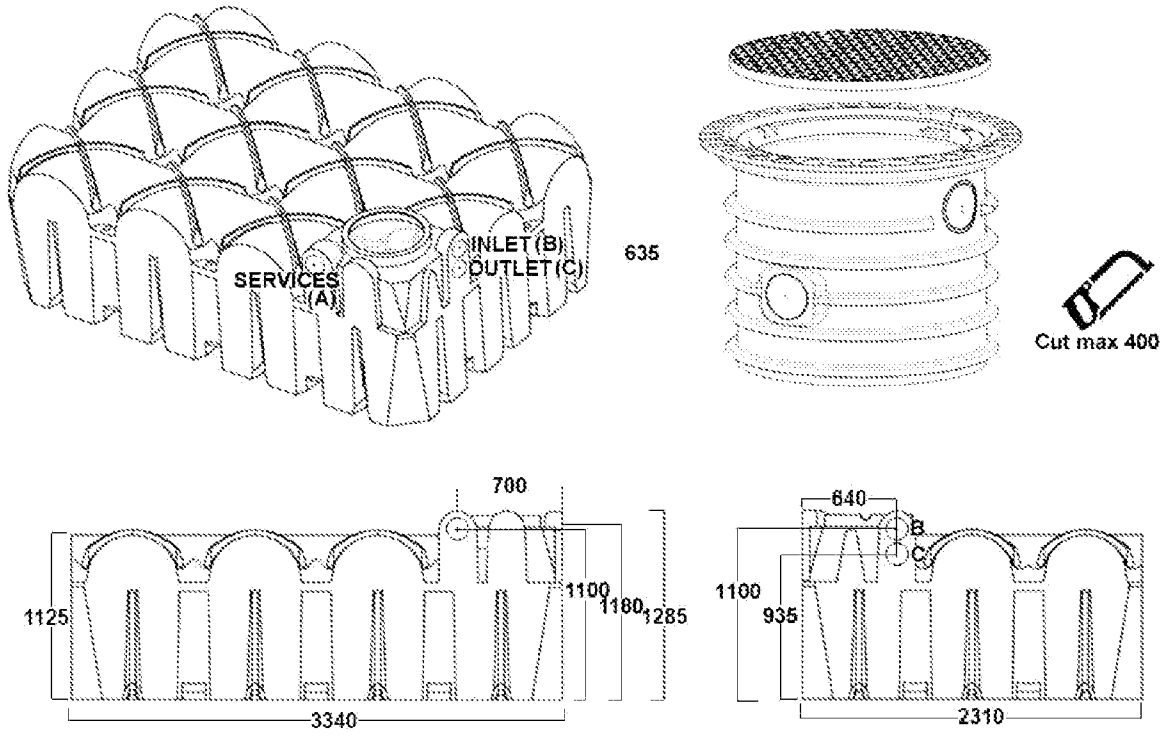

Rainwater Harvesting Limited, Unit A Harrier Park, Southgate Way, Orton Southgate, Peterborough, PE2 6YQ UK

ARUN DISTRICT COUNCIL M/12/24/D

Royal HaskoningDHV
Enhancing Society Together

Appendix F – MicroDrainage Calculations and Proposed Surface Water Drainage Strategy

HaskoningDHV UK Ltd. is part of Royal HaskoningDHV. Registered in England: 01336844. Registered office: Westpoint, Peterborough Business Park, Lynch Wood, Peterborough PE2 6FZ.
VAT registration number: 792428892

Summary of Results for 100 year Return Period (+40%)

Storm Event	Max Level (m)	Max Depth (m)	Max Control (l/s)	Max Overflow (l/s)	Max Σ Outflow (l/s)	Max Volume (m³)	Status
15 min Summer	3.523	0.923	0.0	2.9	2.9	7.1	O K
30 min Summer	3.596	0.996	0.0	6.0	6.0	7.7	O K
60 min Summer	3.688	1.088	0.0	6.0	6.0	8.4	O K
120 min Summer	3.653	1.053	0.0	6.0	6.0	8.1	O K
180 min Summer	3.585	0.985	0.0	6.0	6.0	7.6	O K
240 min Summer	3.562	0.962	0.0	5.2	5.2	7.4	O K
360 min Summer	3.540	0.940	0.0	3.9	3.9	7.2	O K
480 min Summer	3.528	0.928	0.0	3.2	3.2	7.1	O K
600 min Summer	3.520	0.920	0.0	2.7	2.7	7.1	O K
720 min Summer	3.514	0.914	0.0	2.3	2.3	7.0	O K
960 min Summer	3.506	0.906	0.0	1.9	1.9	7.0	O K
1440 min Summer	3.498	0.898	0.0	1.4	1.4	6.9	O K
2160 min Summer	3.492	0.892	0.0	1.0	1.0	6.9	O K
2880 min Summer	3.488	0.888	0.0	0.8	0.8	6.8	O K
4320 min Summer	3.485	0.885	0.0	0.6	0.6	6.8	O K
5760 min Summer	3.483	0.883	0.0	0.5	0.5	6.8	O K
7200 min Summer	3.482	0.882	0.0	0.4	0.4	6.8	O K
8640 min Summer	3.481	0.881	0.0	0.3	0.3	6.8	O K
10080 min Summer	3.480	0.880	0.0	0.3	0.3	6.8	O K
15 min Winter	3.566	0.966	0.0	5.4	5.4	7.4	O K
30 min Winter	3.684	1.084	0.0	6.0	6.0	8.3	O K

Storm Event	Rain (mm/hr)	Flooded Volume (m³)	Discharge Volume (m³)	Overflow Volume (m³)	Time-Peak (mins)
15 min Summer	124.633	0.0	1.0	1.0	16
30 min Summer	83.789	0.0	3.6	3.6	22
60 min Summer	53.779	0.0	6.6	6.6	38
120 min Summer	33.337	0.0	9.8	9.8	68
180 min Summer	24.832	0.0	11.7	11.7	96
240 min Summer	20.006	0.0	13.1	13.1	124
360 min Summer	14.706	0.0	15.1	15.1	184
480 min Summer	11.818	0.0	16.7	16.7	244
600 min Summer	9.966	0.0	17.9	17.9	306
720 min Summer	8.665	0.0	19.0	19.0	366
960 min Summer	6.943	0.0	20.8	20.8	480
1440 min Summer	5.071	0.0	23.4	23.4	732
2160 min Summer	3.696	0.0	26.2	26.2	1084
2880 min Summer	2.949	0.0	28.3	28.3	1420
4320 min Summer	2.142	0.0	31.4	31.4	2184
5760 min Summer	1.705	0.0	33.8	33.8	2920
7200 min Summer	1.427	0.0	35.6	35.6	3632
8640 min Summer	1.235	0.0	37.3	37.3	4280
10080 min Summer	1.093	0.0	38.7	38.7	5088
15 min Winter	124.633	0.0	1.9	1.9	14
30 min Winter	83.789	0.0	4.9	4.9	23

©1982-2019 Innovyze

Summary of Results for 100 year Return Period (+40%)

Storm Event	Max Level (m)	Max Depth (m)	Max Control (l/s)	Max Overflow (l/s)	Max Σ Outflow (l/s)	Max Volume (m³)	Status
60 min Winter	3.713	1.113	0.0	6.0	6.0	8.6	O K
120 min Winter	3.588	0.988	0.0	6.0	6.0	7.6	O K
180 min Winter	3.555	0.955	0.0	4.8	4.8	7.4	O K
240 min Winter	3.539	0.939	0.0	3.9	3.9	7.2	O K
360 min Winter	3.523	0.923	0.0	2.9	2.9	7.1	O K
480 min Winter	3.513	0.913	0.0	2.3	2.3	7.0	O K
600 min Winter	3.508	0.908	0.0	2.0	2.0	7.0	O K
720 min Winter	3.503	0.903	0.0	1.7	1.7	7.0	O K
960 min Winter	3.498	0.898	0.0	1.4	1.4	6.9	O K
1440 min Winter	3.492	0.892	0.0	1.0	1.0	6.9	O K
2160 min Winter	3.487	0.887	0.0	0.7	0.7	6.8	O K
2880 min Winter	3.485	0.885	0.0	0.6	0.6	6.8	O K
4320 min Winter	3.482	0.882	0.0	0.4	0.4	6.8	O K
5760 min Winter	3.481	0.881	0.0	0.3	0.3	6.8	O K
7200 min Winter	3.480	0.880	0.0	0.3	0.3	6.8	O K
8640 min Winter	3.479	0.879	0.0	0.3	0.3	6.8	O K
10080 min Winter	3.479	0.879	0.0	0.2	0.2	6.8	O K

Storm Event	Rain (mm/hr)	Flooded Volume (m³)	Discharge Volume (m³)	Overflow Volume (m³)	Time-Peak (mins)
60 min Winter	53.779	0.0	8.2	8.2	40
120 min Winter	33.337	0.0	11.7	11.7	66
180 min Winter	24.832	0.0	13.9	13.9	94
240 min Winter	20.006	0.0	15.4	15.4	124
360 min Winter	14.706	0.0	17.7	17.7	186
480 min Winter	11.818	0.0	19.5	19.5	246
600 min Winter	9.966	0.0	20.9	20.9	304
720 min Winter	8.665	0.0	22.1	22.1	364
960 min Winter	6.943	0.0	24.1	24.1	484
1440 min Winter	5.071	0.0	27.0	27.0	714
2160 min Winter	3.696	0.0	30.1	30.1	1108
2880 min Winter	2.949	0.0	32.5	32.5	1440
4320 min Winter	2.142	0.0	36.0	36.0	2188
5760 min Winter	1.705	0.0	38.6	38.6	2864
7200 min Winter	1.427	0.0	40.7	40.7	3648
8640 min Winter	1.235	0.0	42.6	42.6	4512
10080 min Winter	1.093	0.0	44.2	44.2	4952

©1982-2019 Innovyze

Rainfall Details

Rainfall Model	FSR	Winter Storms	Yes
Return Period (years)	100	Cv (Summer)	0.750
Region	England and Wales	Cv (Winter)	0.840
M5-60 (mm)	19.000	Shortest Storm (mins)	15
Ratio R	0.350	Longest Storm (mins)	10080
Summer Storms	Yes	Climate Change %	+40

Time Area Diagram

Total Area (ha) 0.033

Time (mins) From:	To:	Area (ha)
0	4	0.033

©1982-2019 Innovyze

Model Details

Storage is Online Cover Level (m) 4.200

Tank or Pond Structure

Invert Level (m) 2.600

Depth (m)	Area (m²)	Depth (m)	Area (m²)
0.000	7.7	1.125	7.7

Pump Outflow Control

Invert Level (m) 2.600

Depth (m)	Flow (l/s)	Depth (m)	Flow (l/s)	Depth (m)	Flow (l/s)	Depth (m)	Flow (l/s)
0.100	0.0000	0.900	0.0000	1.700	0.0000	2.500	0.0000
0.200	0.0000	1.000	0.0000	1.800	0.0000	2.600	0.0000
0.300	0.0000	1.100	0.0000	1.900	0.0000	2.700	0.0000
0.400	0.0000	1.200	0.0000	2.000	0.0000	2.800	0.0000
0.500	0.0000	1.300	0.0000	2.100	0.0000	2.900	0.0000
0.600	0.0000	1.400	0.0000	2.200	0.0000	3.000	0.0000
0.700	0.0000	1.500	0.0000	2.300	0.0000		
0.800	0.0000	1.600	0.0000	2.400	0.0000		

Pump Overflow Control

Invert Level (m) 3.475

Depth (m)	Flow (l/s)	Depth (m)	Flow (l/s)	Depth (m)	Flow (l/s)	Depth (m)	Flow (l/s)
0.100	6.0000	0.900	6.0000	1.700	6.0000	2.500	6.0000
0.200	6.0000	1.000	6.0000	1.800	6.0000	2.600	6.0000
0.300	6.0000	1.100	6.0000	1.900	6.0000	2.700	6.0000
0.400	6.0000	1.200	6.0000	2.000	6.0000	2.800	6.0000
0.500	6.0000	1.300	6.0000	2.100	6.0000	2.900	6.0000
0.600	6.0000	1.400	6.0000	2.200	6.0000	3.000	6.0000
0.700	6.0000	1.500	6.0000	2.300	6.0000		
0.800	6.0000	1.600	6.0000	2.400	6.0000		

©1982-2019 Innovyze

BEACH

BEACH

OUTFALL ONTO BEACH FORESHORE AT MAXIMUM DISCHARGE RATE OF 6.0 l/s VIA SHOE ON BASE OF OVERFLOW PIPE. HIGH LEVEL OUTLET AT 5.15m AOD TO ALLOW DISCHARGE IN THE UNLIKELY EVENT OF VERY HIGH TIDAL LEVELS

RISING MAIN TO DISCHARGE OVERFLOW OVER WALL

RAINWATER HARVESTING SYSTEM (7500 LITRES)
OVERFLOW PUMP SET AT MAXIMUM 6.0 l/s
TO MANAGE A 1 IN 100YR (+40%CC)
STORM EVENT ASSUMING FULL CAPACITY
IN RWH TANK (I.E. NO OUTFALL)
PUMP INVERT LEVEL: 3.475

RAINWATER HARVESTING TANK DIMENSIONS
CL: 4.20
IL: 2.60
3.34m x 2.31m x 1.125m DEEP
ALLOWS FOR 0.475m COVER
NOTE: RWH TANK TO BE ANCHORED

PERMEABLE SURFACING TO ALLOW INFILTRATION TO OCCUR IF POSSIBLE. SWDS DESIGN ASSUMES NO INFILTRATION OCCURS

LINEAR DRAIN TO COLLECT RUNOFF FROM REAR GARDEN AND DISCHARGE TO RWH SYSTEM

RAINWATER DOWNPIPES AT REAR OF PROPERTY ONLY. DISCHARGE TO SURFACE WATER SEWER

PIPE TO BE LOCATED BELOW HOUSE. ROUTE OF PIPE TO BE CO-RDINATED WITH FOUNDATION DESIGN AND IN ACCORDANCE WITH BUILDING REGS PART H. INSPECTION CHAMBER TO BE LOCATED AT EITHER END OF PIPE FOR MAINTENANCE

LINEAR DRAIN ALONG SOUTHERN BOUNDARY TO COLLECT RUNOFF FROM DRIVEWAY AND DISCHARGE TO REAR OF PROPERTY

PERMEABLE SURFACING TO ALLOW INFILTRATION TO OCCUR IF POSSIBLE. SWDS DESIGN ASSUMES NO INFILTRATION OCCURS

MH2
CL: 4.20
IL: 2.85

MH1
CL: 4.00
IL: 2.97

MH5
CL:3.40

150mm DIA. @ 1:150

150mm DIA. @ 1:150

No. 188
SEA FEVER

No 182
Ridge Level10.87

No 184
Ridge Level 10.72

No 186
Ridge level 10.86

HIGH SEAS
Ridge Level 13.07

EDGE
el 12.74

Patio

PL 4.04

PL 4.05

Decking

Low wall

1.8 wall

1.8 fence

Access to Beach (broken tarmac)

Existing driveway and crossover to be utilised

grass verge

tarmac footway

ELMER ROAD

0.000

Top Wall 5.58

Ref Invert 4.13

4.64

4.58

4.60

4.61

4.65

4.15

4.59

4.13

4.17

4.16

4.16

3.75

4.20

4.42

4.36

3.88

3.53

3.69

3.37

3.32

3.34

3.38

2m

5.06

4.05

3.76

3.93

3.25

3.68

3.70

1. GENERAL
(I) WORK TO FIGURED DIMENSIONS ONLY.
(II) THIS DRAWING IS TO BE READ IN CONJUNCTION WITH ALL RELEVANT ARCHITECTURAL DRAWINGS, DETAILED SPECIFICATIONS WHERE APPLICABLE AND ALL ASSOCIATED DRAWINGS IN THIS SERIES.
(III) ANY DISCREPANCY ON THIS DRAWING IS TO BE REPORTED IMMEDIATELY TO THE COMPANY FOR CLARIFICATION..
(Iv) THE CONTRACTOR IS RESPONSIBLE FOR ALL TEMPORARY WORKS AND FOR THE STABILITY OF THE WORKS IN PROGRESS.
2. DRAINAGE GENERAL
(I) ALL FOUL AND STORM WATER DRAINS WHICH ARE NOT TO BE ADOPTED AS PUBLIC SEWERS UNDER A SECTION 104 AGREEMENT MUST BE CONSTRUCTED IN ACCORDANCE WITH THE BUILDING REGULATIONS, BS EN 752 AND WHERE APPROPRIATE THE RELEVANT AGREEMENT CERTIFICATES.
(II) MANHOLES, GULLIES, GULLY CONNECTIONS, SEWERS AND OTHER SEWERAGE STRUCTURES INTENDED TO CONVEY SURFACE WATER ARE TO BE CONSTRUCTED IN ACCORDANCE WITH THE WATER AUTHORITIES ASSOCIATION SPECIFICATION 'SEWERS FOR ADOPTION' 6TH EDITION AND RELEVANT COUNCIL DESIGN GUIDE.
(III) ALL CONCRETE USED IN DRAINAGE WORKS TO COMPLY WITH BRE DIGEST 363 FOR CLASS 2 SULPHATE CONDITIONS.
3. MANHOLE COVERS AND FRAMES
(I) MANHOLE COVERS TO BE CLASS D400 IN HIGHWAYS, CLASS B125 IN FOOTWAYS AND VERGES, CLASS A15 IN NON-TRAFFICKED AREAS.
(II) MANHOLE COVER AND FRAME TO BE BEDDED AND SURROUNDED IN 1:3 MORTAR.
4. MANHOLE RINGS, COVER SLABS & TAPERS
(I) PRECAST CONCRETE MANHOLE UNITS SHALL COMPLY WITH THE REQUIREMENTS OF BS 5911. THE RELEVANT ABSORPTION TESTS REQUIRED SHALL BE CARRIED OUT ON A SAMPLE OF THOSE RINGS AND SLABS USED UNLESS A CERTIFICATE OF TESTING IS SUPPLIED BY THE MANUFACTURER. COVER SLABS SITUATED UNDER CARRIAGEWAYS OR TRAFFICKED AREAS SHALL BE HEAVY DUTY AND THOSE ELSEWHERE SHALL BE LIGHT DUTY. MANHOLE UNITS SHALL BE COMPLETE WITH STEP IRONS IF REQUIRED.
5. PIPES
(I) PLASTIC PIPES SHALL BE OF UNPLASTICISED POLYVINYL CHLORIDE (UPVC) COMPLYING WITH THE REQUIREMENTS OF BS EN 1401.
(II) CONCRETE PIPES SHALL BE SPUN BY A CENTRIFUGAL PROCESS OR BE VERTICALLY PRESSED, THEY SHALL POSSESS SELF INVERTING SOCKETS AND SHALL COMPLY WITH WITH THE REQUIREMENTS OF AND BE TESTED IN ACCORDANCE WITH BS 5911.
(III) SOLID WALL CONCENTRIC EXTERNAL RIB-REINFORCED UNPLASTICISED PVC PIPE SHALL COMPLY WITH ASTM A978.
(Iv) ALL VITRIFIED CLAY PIPES TO BE IN ACCORDFANCE WITH BS EN 295.
(v) ALL PIPE CONNECTIONS TO MHS AND CATCH PITS TO HAVE MIN 600MM ROCKER PIPE AS CLOSE AS PRACTICABLE TO CHAMBER WALL.
6. GULLY GRATES & FRAMES
(I) GULLY GRATES AND FRAMES FOR CARRIAGEWAY GULLIES SHALL COMPLY WITH BS EN 142. GULLIES SHALL BE PATTERN GB4-325 FOR ROADS BELOW 50 DV AND PATTERN GA2-450 FOR ROADS ABOVE 50 DV. GULLY GRATES AND FRAMES FOR KERB SIDE GULLIES SHALL BE PATTERN GK-115 FOR ROADS BELOW 50 DV AND GK-165 FOR ROADS ABOVE 50 DV. CURVED BAR GULLY GRATES SHALL BE USED IN ROADS WHERE THE GRADIENT EXCEEDS 4%.

WARNING!

WORKING ON LIVE DRAINAGE INFRASTRUCTURE AND IN CONFINED SPACES MUST BE UNDERTAKEN IN ACCORDANCE WITH AN APPROPRIATE RISK ASSESSMENT.

PRIOR TO OCCUPATION OF THE DEVELOPMENT A CCTV DRAINAGE SURVEY AND INSPECTION OF THE INSTALLED ASSETS MUST BE UNDERTAKEN TO CONFIRM THAT THE SYSTEM HAS BEEN CONSTRUCTED PROPERLY. ANY DEFECTS IN THE SYSTEM SHALL BE REPAIRED PRIOR TO OCCUPATION OF THE DEVELOPMENT.

LEGEND

- PRIVATE SURFACE WATER DRAIN
- SLOT/CHANNEL DRAIN
- TYPE 2 MANHOLE
- TYPE 3 INSPECTION CHAMBER
- RAIN WATER PIPE
- RAINWATER HARVESTING TANK
- OVERLAND FLOW

REV	DATE	BY	CKD	APP	DESCRIPTION

PRELIMINARY DRAWING
FOR INFORMATION ONLY. NOT FOR CONSTRUCTION

Client: CLIVE AND SAM CAPLIN

Royal HaskoningDHV
RHDHV | Third Floor | Telecom House | 125-135 Preston Road | Brighton | BN1 6AF | www.royalhaskoningdhv.com

Project: SEAFEVER, 188 ELMER ROAD
BOGNOR REGIS PO22 6JA

Drawing: PROPOSED SURFACE WATER DRAINAGE SYSTEM

Drawn by: LW — Date: 15/02/2024

Drawing No.: PC5188-DR01 REVB — Revision: REV A

Drawing Scale: 1:200

ARUN DISTRICT COUNCIL MI/2024/0066