SHS PRODUCTS™
www.shsproducts.co.uk

Quote	37097
Date:	17/01/2018
Page:	1 of 1

Lee Farndell

Job: Lee Farndell
Contacts:
Work:
Email: [redacted]

Quantity	Description	Size	Rate	Amount
1	Residence	13 infill 42.4mm Tube System (Non Web Use) 316 Outdoor		

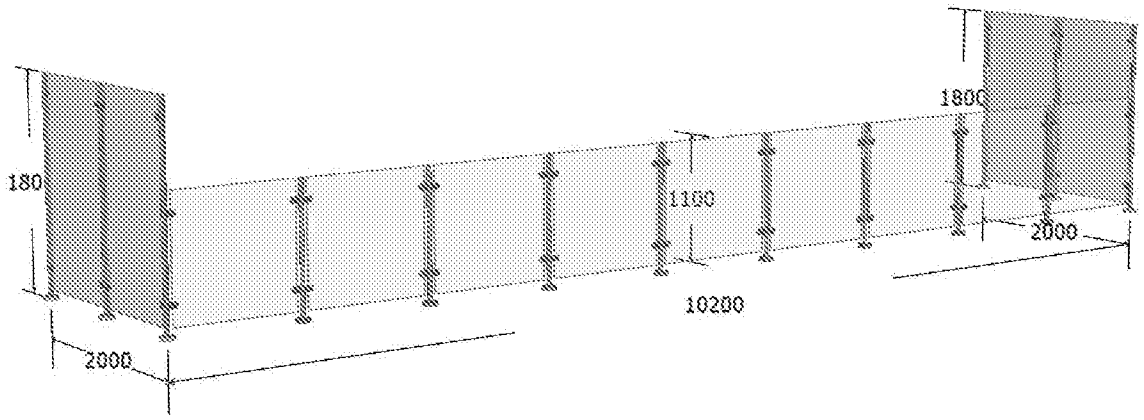

Your quotation is on a supply only basis unless survey and fitting are specified separately and excludes the fixings for the wall, floor and structure.
All systems including the glass are manufactured at our own premises under tight quality controls to a regulation height and apply to horizontal runs only excluding slopes, raked or shaped sections unless detailed within the drawing.
Please ask your adviser when placing your order our current lead times. All orders are subject to our Terms and Conditions which are available via our website www.shsproducts.co.uk or can be sent upon request.
If you have any questions or would like to discuss your quote, please feel free to call

Matthew Leese
Customer Service Adviser
[redacted]

ELEGANCE SYSTEM
Mirror Finished Grade 316 Stainless Steel (42.4mm Dia Round Tube)
10.76mm Clear and Opaque Laminate Glass Infill. - SIDE PANELS ARE OPAQUE
1100mm and 1800mm High from Base
Floor Mounted upright posts, 120mm Dia levelling base plate , 125mm Dia cover, end cap in top.
D-Shaped glass clamps for securing the infill. 30mm gap between post and start of glass

Stainless Handrail Systems Ltd. Unit E6/E7 West Point, Middlemore Lane West, Aldridge, Walsall, West Mids, WS9 8BG
Phone: +44 1922 743842 Fax: +44 1922 744050 Email: sales@shsproducts.co.uk

ARUN DISTRICT COUNCIL M/19/18/POC