- DO NOT SCALE FROM THIS DRAWING -
All dimensions in mm U.N.O

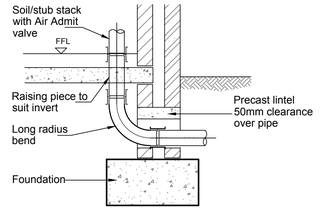

STUB STACK/SVP DETAIL

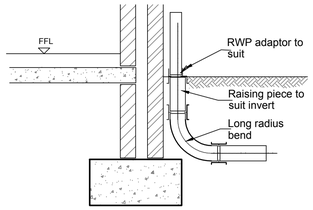

RWP DETAIL

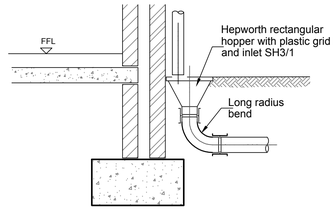

RWP WITH ACCESS DETAIL

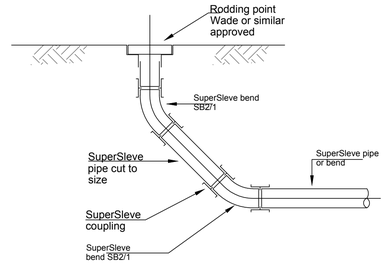

RODDING EYE DETAIL

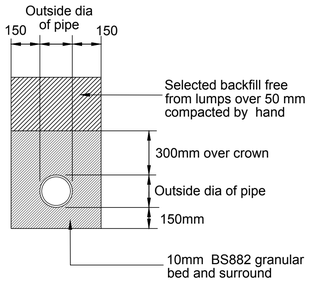

BEDDING CLASS S

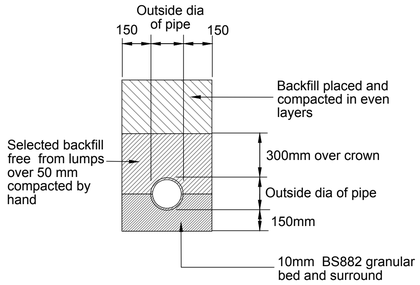

BEDDING CLASS B

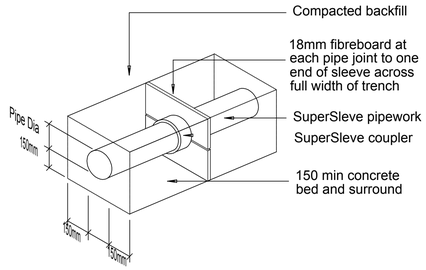

CONCRETE BED AND SURROUND FOR DRAINS WITH LESS THAN 1200mm COVER FROM TOP OF BARREL TO FINISHED ROAD LEVEL

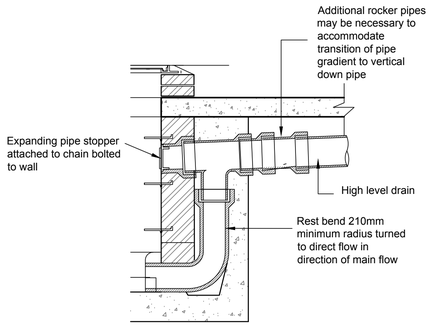

BACKDROP TO EXISTING MANHOLE

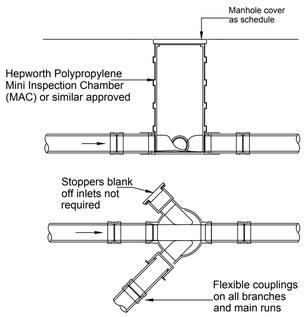

MINI ACCESS CHAMBER

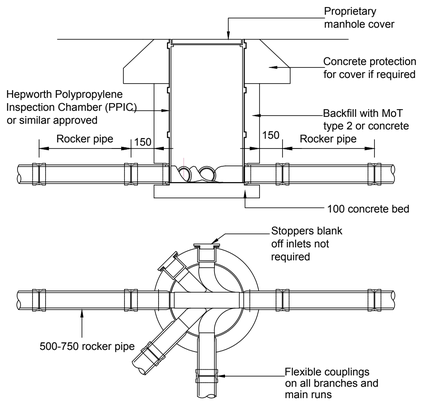

POLYPROPYLENE INSPECTION CHAMBER (MANHOLE TYPE Z)
1:20

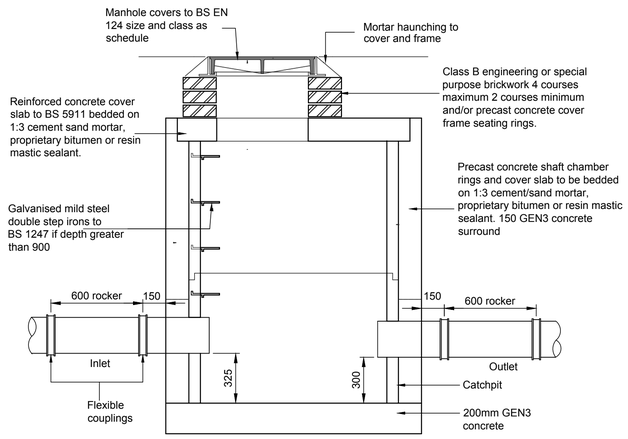

SW CATCHPIT PCC MANHOLE

Rev		By	Chk'd	Date
A	Details added	MG	BP	23/10/17

Status: PRELIMINARY

Client: BIRCHSIDE MANAGEMENT LTD

Project: ROSELAND
STATION APPROACH
THE CAUSEWAY, ARUNDEL

Title: DRAINAGE DETAILS

GURNEY consulting engineers

Job No.	Drg No.	Rev
9712	02	A

Drawn by	Date
rw	18.10.17
Checked by	**Scale**
BRP	1:25 @ A1

© Copyright belongs to GURNEY consulting engineers
Hallmark House, 10/12 St.Johns Rd, Woking, Surrey. GU21 7SE
tel: 01483 721721 fax: 01483 725073 e-mail: gce@gurneyce.com

ARUN DISTRICT COUNCIL LV2417/DOC