NOTES

1. No dimensions are to be scaled from this drawing except for planning purposes.
2. Contractors must verify all figured dimensions on site before commencing any work or making any shop drawings.
3. This drawing is the sole copyright of Savills and no part may be reproduced without the written consent of the above.
4. Site Location Plans are prepared from the Ordnance Survey Map with the sanction of the Controller of H.M. Stationery Office. Crown Copyright Reserved.

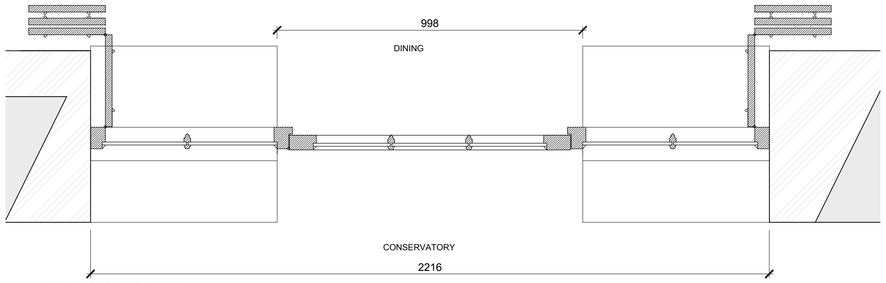

DOOR PLAN
SCALE 1:10

Scale in Metres
0 0.5 1

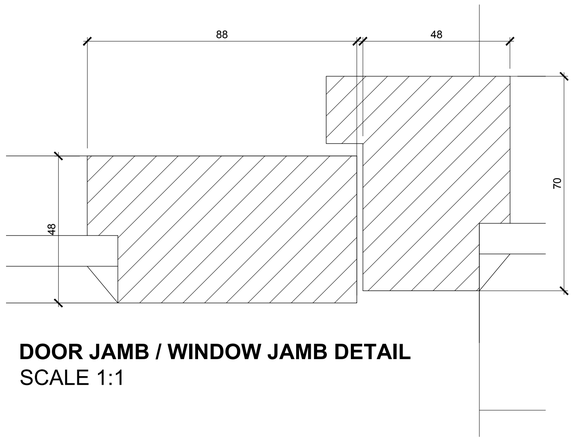

DOOR JAMB / WINDOW JAMB DETAIL
SCALE 1:1

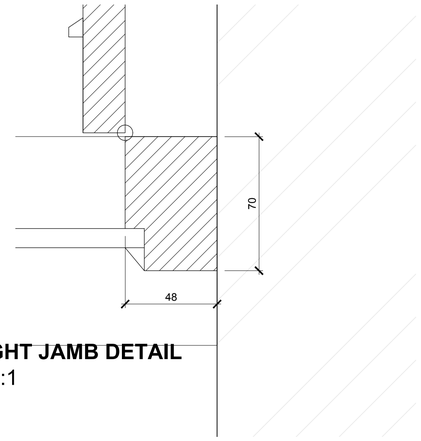

SIDE LIGHT JAMB DETAIL
SCALE 1:1

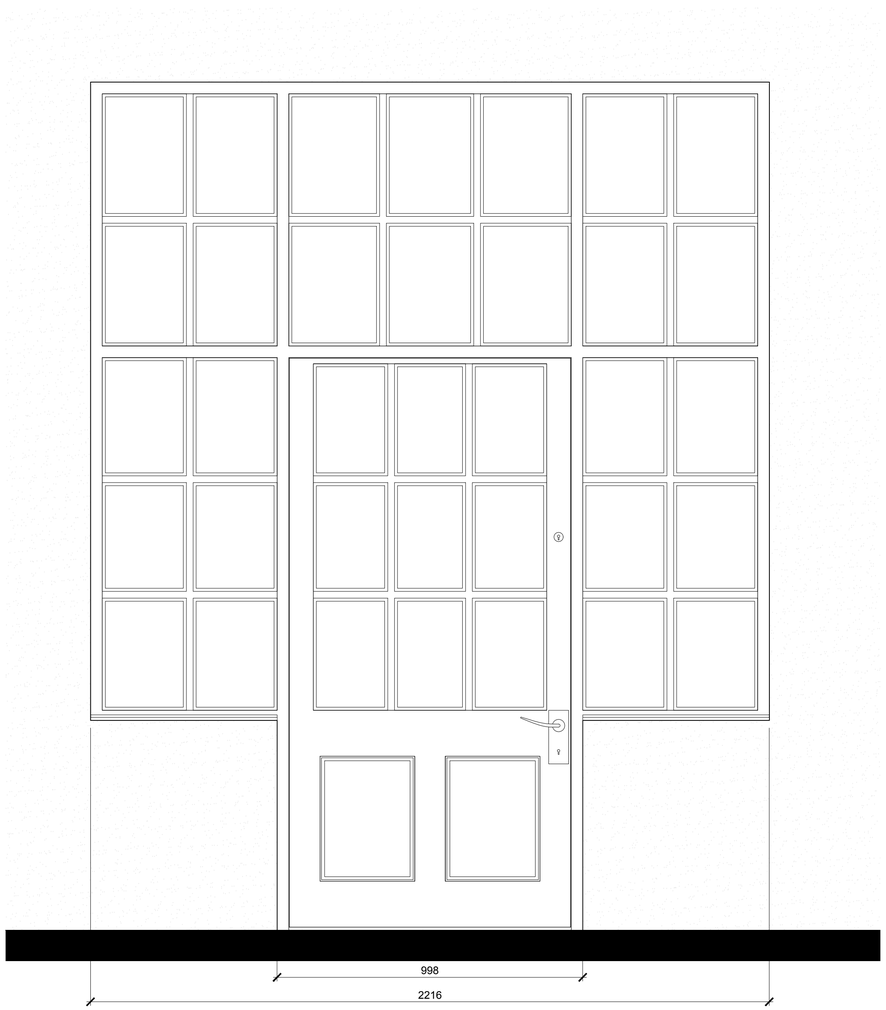

ELEVATION
SCALE 1:10

Scale in Metres
0 0.5 1

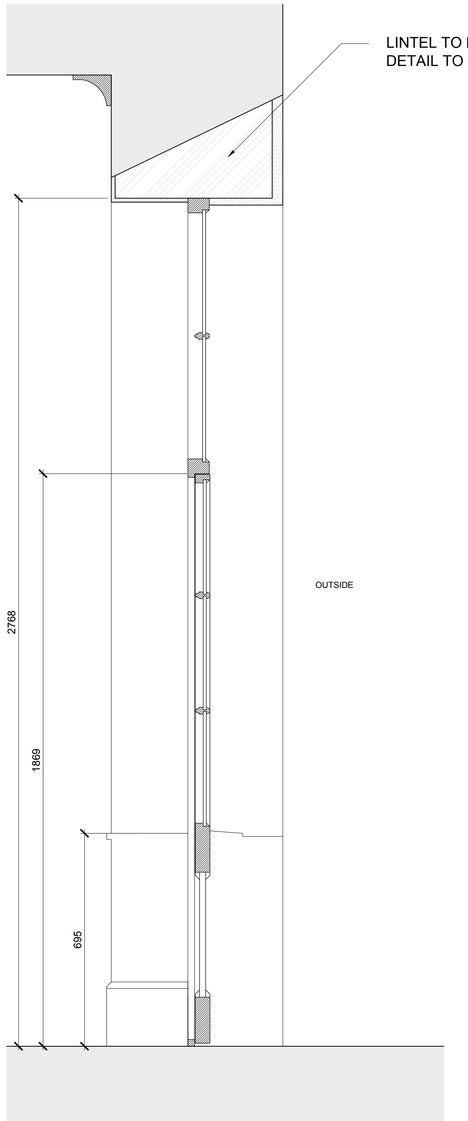

SECTION
SCALE 1:10

Scale in Metres
0 0.5 1

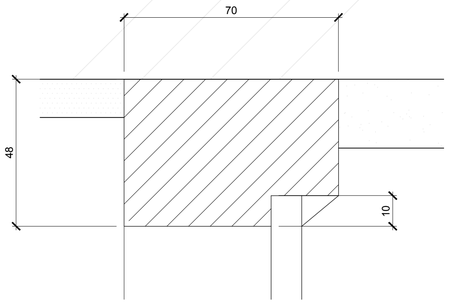

TOP LIGHT HEAD DETAIL
SCALE 1:1

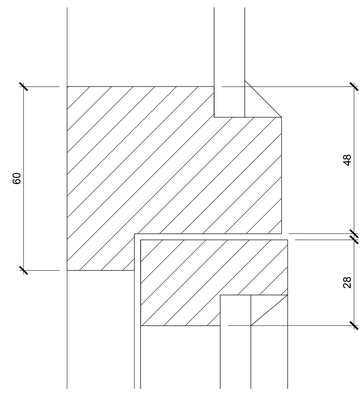

DOOR HEAD DETAIL
SCALE 1:1

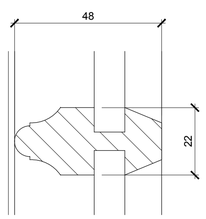

GLAZING BAR SECTION
SCALE 1:1

/

Rev	Description	By	Date

Drawing Status
PLANNING

savills

RURAL CONSULTANCY SERVICES
Savills (UK) Limited
Exchange House, Petworth
West Sussex. GU28 0BF

Telephone: + 44 (0)1798 345 980
Fax: + 44 (0)1798 345 998
www.savills.co.uk

RIBA Practice Chartered Practice

Client
MR D MONTAGNANI

Project
LYMINSTER HOUSE
CHURCH LANE, LYMINSTER
BN17 7QJ

Drawing Title
PROPOSED CONSERVATORY DOOR DETAILS

Scale	Date	Drawn	Checked
1:10 @ A1	APR 16	APB	ES

Drawing Number	Rev.	Project Number
501	/	PWRU367122

ARUN DISTRICT COUNCIL LV19/19/L