ARUN DISTRICT COUNCIL:LU/324/06/L 28/09/2006

ARUN DISTRICT COUNCIL
No. LU 324 06 L
RECEIVED 28/9/06

HAMSON Partnership

Supporting Statement

Background

'The Lemon Tree' of 61 Surrey Street, Littlehampton formally known as 'Robert Carvers' is a restaurant/ bar which is made up of many different styles of building, the front section dates back to the 17th Century with a small amount of remaining original features, the rear of the building has a number of later additions including a high vaulted ceiling with large picturesque windows and a two storey addition providing the kitchen area and first floor accommodation.

Over the past 5 years the surrounding areas have been vastly improved with a number of residential developments and commercial opportunities upgrading the surrounding areas and enhancing local businesses. 'The Lemon Tree' has a large bar and dining area on the ground floor and two further dining areas on the first floor, one of which overlooks the bar beneath.

Two applications for Listed Building Consent have recently been submitted and approved, as follows:
i) your ref: LU/352/05/L- for the re-direction of the front stair case,
ii) your ref: LU/259/06/L - to remove the downstairs male WC and re-design the first floor female WC to make it more space effective and include the male WC. On the ground floor provide a secure office with dry store and walk in cold room.

Due to the popularity of the restaurant the most practical solution would be to carry out the approved works together (subject to approval for installation of central heating) in the quieter part of the year (i.e. February). The drawings showing the proposed heating system have been added to the already approved drawings as all the work is intended to be carried out together.

Problem

Due to the size of the restaurant/ bar and the location near the sea the building can become quite cold in the winter months; therefore the heating is in on for large periods of the day. The major problems encountered are as follows:

- The electric storage heaters are extremely expensive to run.
- The restaurant/ bar use a large amount of water throughout the day which proves to be expensive.
- The electric storage heaters are not placed in the most beneficial place therefore a large amount of the heat produced is lost out of the doors and windows.
- The current electric heaters are old in appearance.

Solution

We propose to remove the existing electric storage heaters to the building complete, install a new gas fired boiler in the storage space on the second floor together with a new hot water storage cylinder all in accordance with the attached layout. We intend to install new Victorian style radiators in the communal areas and smaller panel heaters in the

ARUN DISTRICT COUNCIL:LU/324/06/L 28/09/2006

more restricted areas where space is important as shown on the attached product information.

The system will also be extended to serve the hot water supply in the kitchen and WC's.

General

The proposed internal alterations to 'The Lemon Tree' have been carefully considered and discussed in depth to provide the most aesthetically pleasing solution while causing no disturbance to any existing features.

feature radiators

effective from 1st april 2006

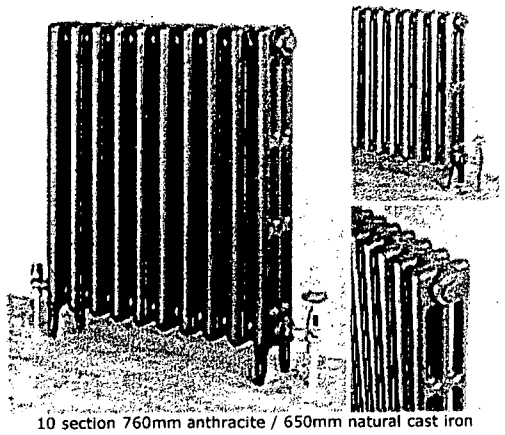

10 section 760mm anthracite / 650mm natural cast iron

VICTORIAN 3

three column cast iron radiator - classic, cast and cosy
hand-built using traditional methods

below are approximate measurements of assembled radiator sections (end bush to end bush)
these are intended as a rough guide only

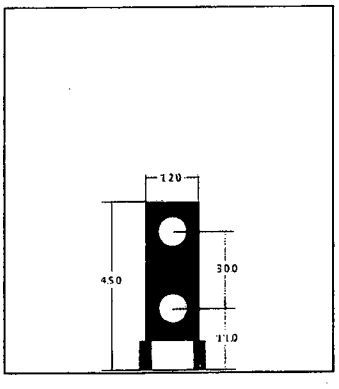

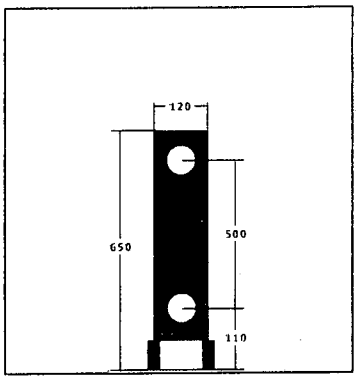

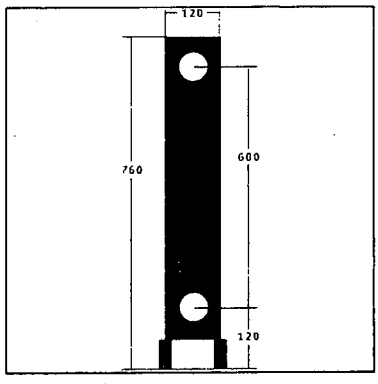

VICTORIAN 3

450mm high
120mm deep

sections	length (mm)	output watts	output btus	top coat £
3	213	276	945	103
4	274	368	1260	137
5	335	460	1575	172
6	396	552	1890	206
7	457	644	2205	240
8	518	736	2520	275
9	579	828	2835	309
10	640	923	3150	343
11	701	1015	3465	378
12	762	1108	3780	412
13	823	1199	4095	446
14	884	1291	4410	481
15	945	1383	4725	515
16	1006	1477	5040	549
17	1067	1569	5355	584
18	1128	1661	5670	618
19	1189	1754	5985	652
20	1250	1846	6300	687

650mm high
120mm deep

output watts	output btus	top coat £
399	1362	114
532	1816	151
665	2270	188
798	2724	226
931	3178	264
1064	3632	301
1198	4086	339
1331	4540	377
1464	4994	414
1597	5448	452
1730	5902	490
1863	6356	527
1996	6810	565
2129	7264	603
2262	7718	640
2395	8172	678
2528	8626	716
2661	9080	753

760mm high
120mm deep

output watts	output btus	top coat £
450	1536	123
600	2048	164
750	2560	205
900	3072	246
1050	3584	287
1200	4096	328
1351	4608	369
1501	5120	410
1651	5632	451
1801	6144	492
1951	6656	533
2101	7168	574
2251	7680	615
2401	8192	656
2551	8704	697
2701	9216	738
2851	9728	779
3001	10240	820

prices above are for radiators finished in a top coat – for primed only finish, deduct £4 per section from the above prices

- top coat finishes available: old penny, pewter, natural cast iron, black, anthracite, copper – colour card available on request
- warning: please be aware that pewter, white, cream and other light coloured paint finishes highlight the imperfections characteristic of cast iron more than the darker colours
- grey zinc oxide (primed finish) available for on site painting. we strongly advise against powder coating this product as this process can weaken the seals between sections. powder coating will therefore invalidate the guarantee
- approximate pipe centres can be provided if you wish to install your pipework in advance of receiving your radiator. these measurements are intended as a rough guide only
- radiators are supplied with the necessary fixings i.e. brackets, spacers, air vents etc (note: screws are not supplied)
- to complete the look see our valves page for traditional style valves (valves are not included as standard)
- nationwide delivery available
- to order or for further information, please call or email
- heat outputs are shown at operating temperatures of 90/70/20 (Δt60°c)

these prices are exclusive of vat

www.featureradiators.com
bingley railway station, wellington street, bingley, west yorkshire bd16 2nb
tel. 01274 567789 fax. 01274 561183 email: contactus@featureradiators.co.uk

ARUN DISTRICT COUNCIL:LU/324/06/L 28/09/2006

feature radiators

DANSK RANGE - THE PLAN

price list with effect from 1st july 2006

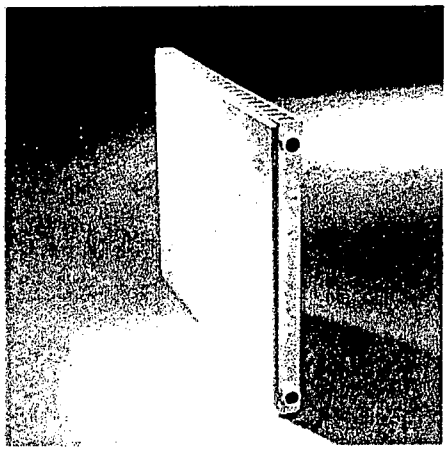

400mm high

width (mm)	44mm - deep		70mm - deep	
	output watts / btus	price £	output watts / btus	price £
400	353 / 1204	129		
600	530 / 1808	158		
800	707 / 2412	187	921 / 3142	222
1000			**1151 / 3927**	**260**
1200			**1381 / 4712**	**298**
1400			**1612 / 5500**	**335**
1600			1842 / 6285	373
1800			2072 / 7070	410
2000			2302 / 7854	448

500mm high

width (mm)	44mm deep		55mm deep		70mm deep		82mm deep	
	output watts / btus	price £	output watts / btus	price £	output watts / btus	price £	output watts / btus	price £
400	420 / 1433	138	475 / 1621	148				
500	**525 / 1791**	**154**	594 / 2027	167				
600	630 / 2150	171	713 / 3433	186				
700	735 / 2508	187	832 / 2839	205	960 / 3276	224	1056 / 3603	238
800	**841 / 2869**	**203**	951 / 3245	223	1097 / 3743	246	1207 / 4118	261
900	946 / 3228	219	1069 / 3647	242	1234 / 4210	267	1358 / 4633	285
1000	1051 / 3586	236	1188 / 4053	261	1371 / 4678	289	1509 / 5149	309
1200	**1261 / 4303**	**268**	1426 / 4866	298	1646 / 5616	332	1810 / 6176	356
1400					1920 / 6551	375	2112 / 7206	403
1600					2194 /7486	419	2414 / 8237	450
1800					2468 / 8421	462	2716 / 9267	497
2000					2743 / 9359	505	3017 / 10294	544
2400					3291 / 11229	591	3621 / 12355	638

600mm high

width (mm)	44mm deep		55mm deep		70mm deep		82mm deep	
	output watts / btus	price £	output watts / btus	price £	output watts / tus	price £	output watts / btus	price £
400	487 / 1662	147	548 / 1870	159				
500	609 / 2078	165	685 / 2337	180	794 / 2709	196	872 / 2975	207
600	731 / 2494	183	823 / 2808	202	953 / 3252	220	1046 / 3569	234
700	853 / 2910	201	960 / 3276	223	1111 / 3791	245	1221 / 4166	260
800	975 / 3327	220	1097 / 2743	244	1270 / 4333	269	1395 / 4760	287
900	1097 / 3743	238	**1234 / 4210**	**266**	1429 / 4876	293	**1569 / 5353**	**314**
1000	1219 / 4159	256	**1371 / 4678**	**287**	1588 / 5418	318	**1744 / 5951**	**340**
1200	1462 / 4988	293	**1645 / 5613**	**330**	1905 / 6500	367	**2093 / 7141**	**394**
1400			**1919 / 6548**	**372**	2223 / 7585	415	2441 / 8329	447
1600			2193 / 7483	415	2540 / 8666	464	2790 / 9519	500
1800			2468 / 8421	458			**3139 / 10710**	**553**
2000			2742 / 9356	500			3488 / 11901	607
2400							4185 / 14279	713

www.featureradiators.com

bingley railway station, wellington street, bingley, west yorkshire bd16 2nb

tel. 01274 567789 fax. 01274 561183

email: contactus@featureradiators.co.uk

ARUN DISTRICT COUNCIL:LU/324/06/L 28/09/2006

feature radiators

700mm high

width (mm)	55mm deep		82mm deep	
	output watts / btus	price £	output watts / btus	price £
500	775 / 2644	194	-	
700	-		1377 / 4698	283
800	1240 / 4231	265	1574 / 5370	313
900	1395 / 4760	289	1771 / 6043	342
1000	1550 / 5289	313	**1968 / 6715**	**372**
1200	1860 / 6346	361	2361 / 8056	431
1400	2170 / 7404	408	2755 / 9400	491

800mm high

width (mm)	55mm deep		82mm deep	
	output watts / btus	price £	output watts / btus	price £
400	693 / 2365	180	875 / 2986	207
500	867 / 2958	206	1094 / 3733	239
600	1040 / 3548	232	1313 / 4480	272
800	1387 / 4732	284	1750 / 5971	338
1000	1734 / 5916	336	2188 / 7465	404
1200	2080 / 7097	388	2625 / 8957	469
1400	2427 / 8281	441	3063 / 10451	535

many other sizes available by special order. no cost premium but extended delivery time

- white (RAL 9010) - sizes in bold are UK stock items (4-5 days), for other sizes please allow around 2 weeks delivery
- side valve connections as standard, so add an extra 150mm to the width of the radiator to allow for valves
- underside valve connections can be specified at no extra cost but extended delivery time
- curved and angled plans available to special order - please ask for details
- for colours, add 20% to above prices - £60 surcharge for 5 radiators or less – extended delivery time
- made of steel
- distance from wall to front face is depth of radiator plus 10mm
- approximate pipe centres can be provided if you wish to install your pipework in advance of receiving your radiator.
- radiators are supplied with the necessary fixings i.e. brackets, spacers, air vents etc
- to complete the look see our valves page (valves are not included as standard)
- nationwide delivery available
- to order or for further information, please call or email
- heat outputs are shown at operating temperatures of 90/70/20 (Δt60°c)

the above prices are exclusive of VAT

www.featureradiators.com
bingley railway station, wellington street, bingley, west yorkshire bd16 2nb
tel. 01274 567789 fax. 01274 561183
email: contactus@featureradiators.co.uk