Installation Drawings

General Arrangement: Horizontal Installation

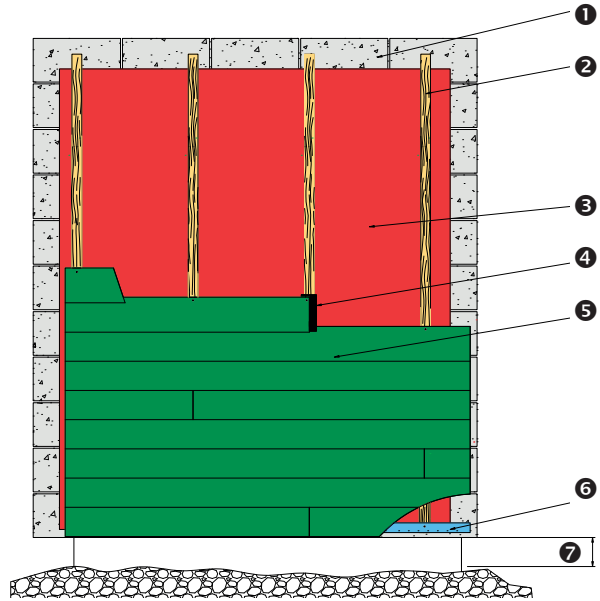

❶ Bricks / Masonry
❷ Vertically installed 50×50mm timber battens
❸ Breather membrane
❹ EPDM gasket at joint
❺ HardiePlank® cladding
❻ HardiePlank starter strip with ventilation
❼150mm min.

N DISTRICT COUNCIL LU/183/21/DOC

Ground Level–Ventilation Detail

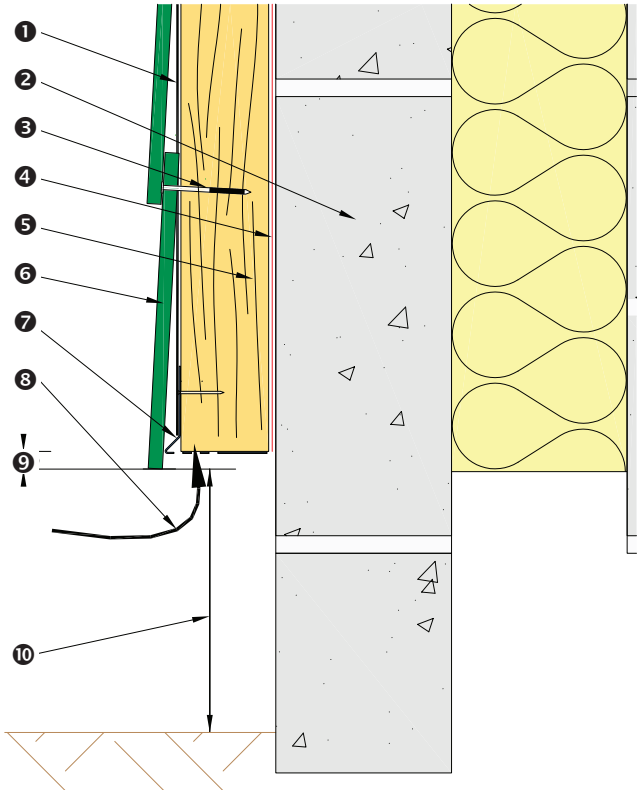

❶ EPDM
❷ Masonry
❸ 51 × 2.95mm fixing
❹ Breather membrane
❺ Timber battens 50 × 50mm
❻ HardiePlank® cladding
❼ HardiePlank starter strip with ventilation
❽ Ventilation path
❾ 10mm drip detail
❿ 150mm min.

Top of Cladding–Ventilation Detail

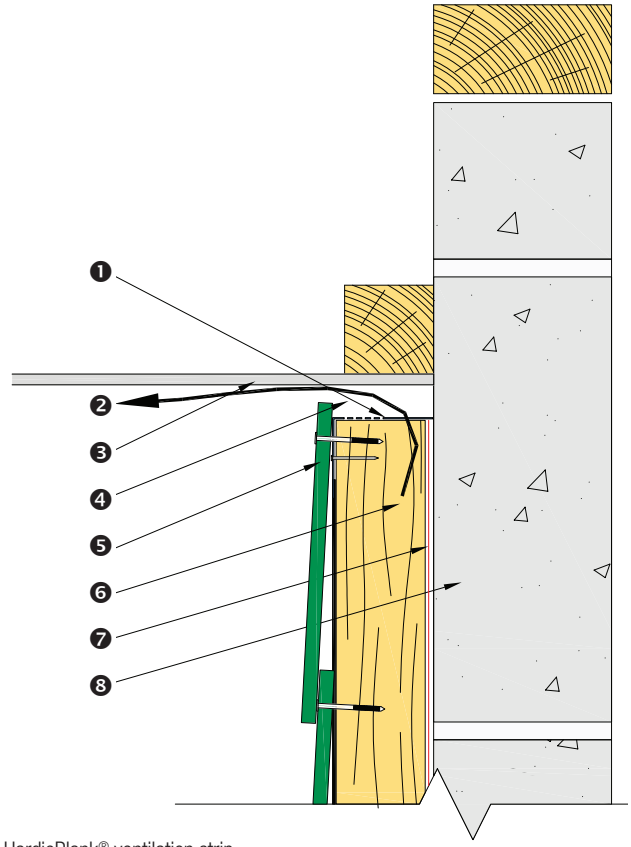

❶ HardiePlank® ventilation strip
❷ Ventilation path
❸ Soffit board
❹ 10mm ventilation gap
❺ HardiePlank cladding
❻ 50 × 50mm vertical timber framing batten
❼ Breather membrane
❽ Masonry

N DISTRICT COUNCIL LU/183/21/DOC

External Corner–HardieTrim® NT3®

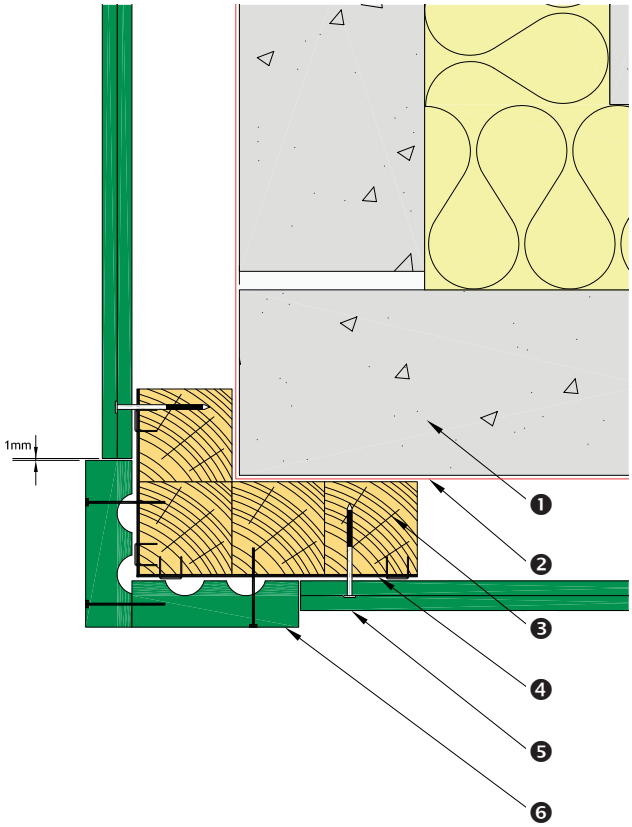

❶ Masonry
❷ Breather membrane
❸ Timber batten 50 × 50mm
❹ EPDM
❺ HardiePlank® cladding
❻ HardieTrim® NT3® profile

Internal Corner–HardieTrim® NT3®

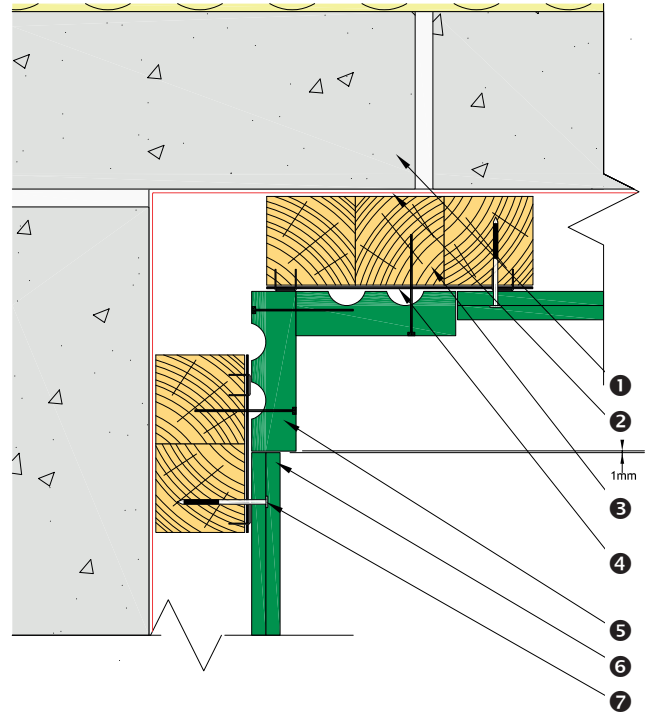

❶ Masonry
❷ Breather membrane
❸ Timber battens 50 × 50mm
❹ EPDM
❺ HardieTrim® NT3® profile
❻ HardiePlank® cladding
❼ 51 × 2.95mm fixing

N DISTRICT COUNCIL LU/183/21/DOC

External Corner–MetalTrim

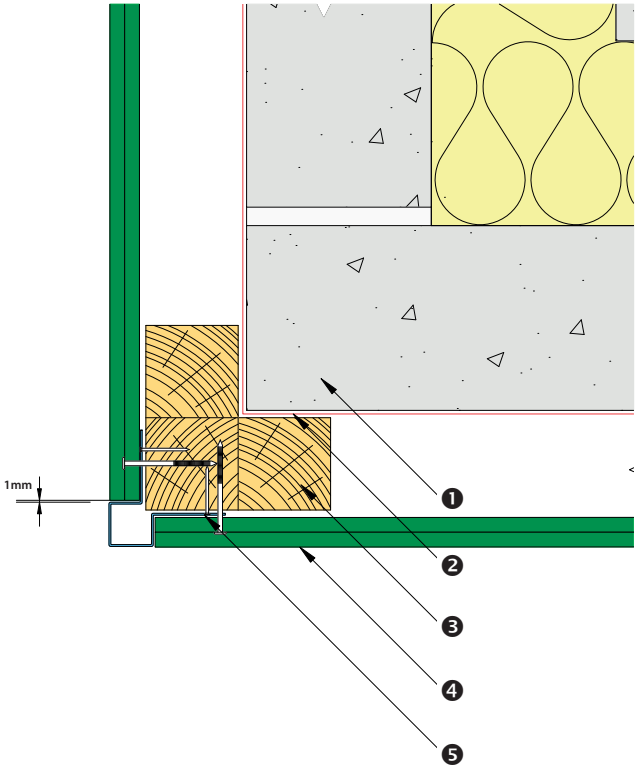

❶ Masonry
❷ Breather membrane
❸ Timber batten 50 × 50mm
❹ HardiePlank® cladding
❺ MetalTrim external corner profile

Internal Corner–MetalTrim

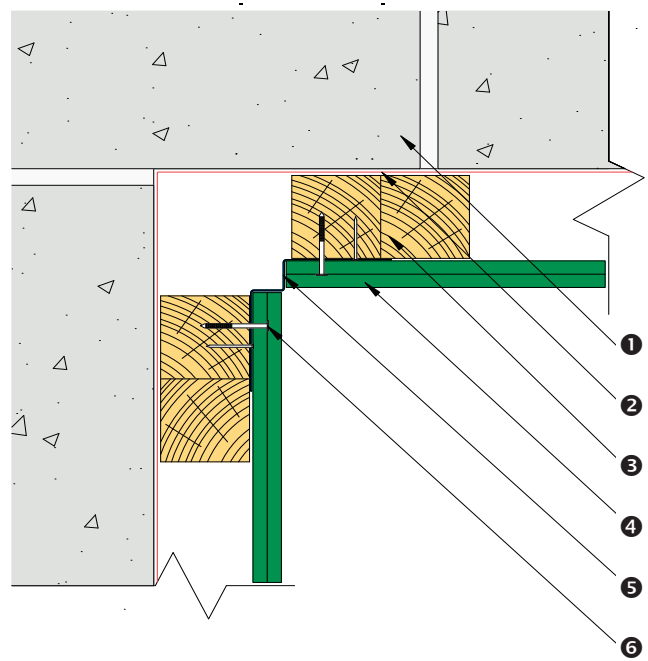

❶ Masonry
❷ Breather membrane
❸ Timber battens 50 × 50mm
❹ HardiePlank® cladding
❺ MetalTrim internal corner profile
❻ 51 × 2.95mm fixing

N DISTRICT COUNCIL LU/183/21/DOC

Gables

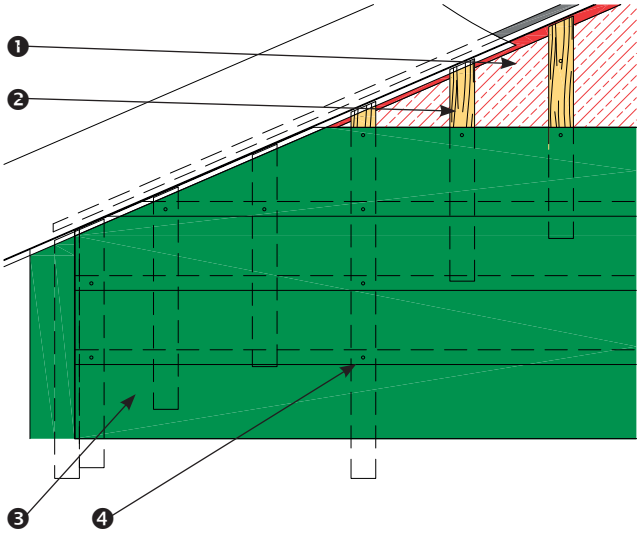

❶ Breather membrane
❷ Timber battens 50 × 50mm, 200mm centres
❸ HardiePlank® cladding
❹ 50mm fixing nail

Brick Dado Detail

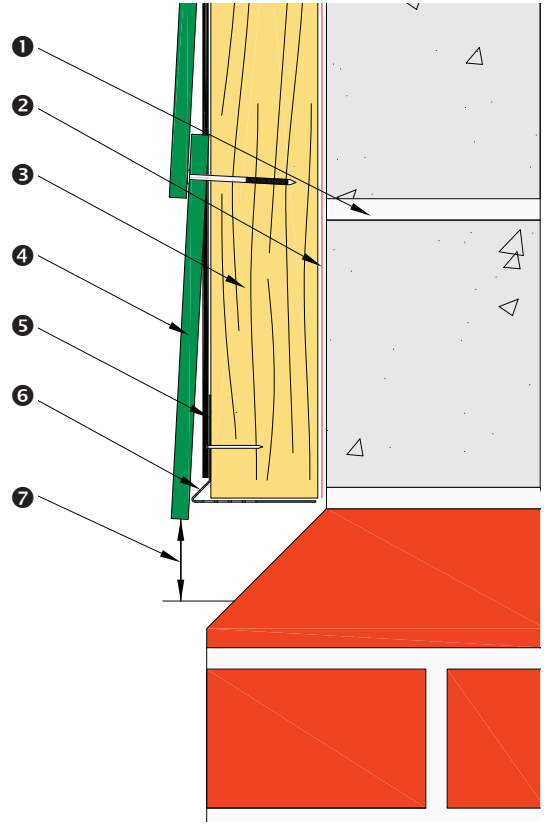

❶ Masonry
❷ Breather membrane
❸ Timber battens 50 × 50mm
❹ HardiePlank® cladding
❺ EPDM
❻ HardiePlank starter strip with ventilation
❼ 10mm drip detail

N DISTRICT COUNCIL LU/183/21/DOC

Expansion Gap

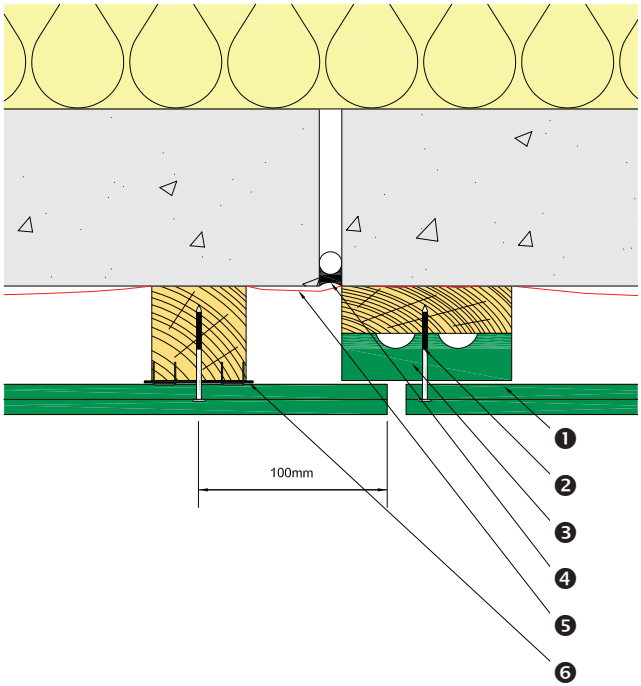

❶ HardiePlank® cladding
❷ 51 × 2.95mm fixing
❸ HardieTrim® NT3® profile
❹ Expansion gap
❺ Breather membrane
❻ EPDM

Abutment to Render

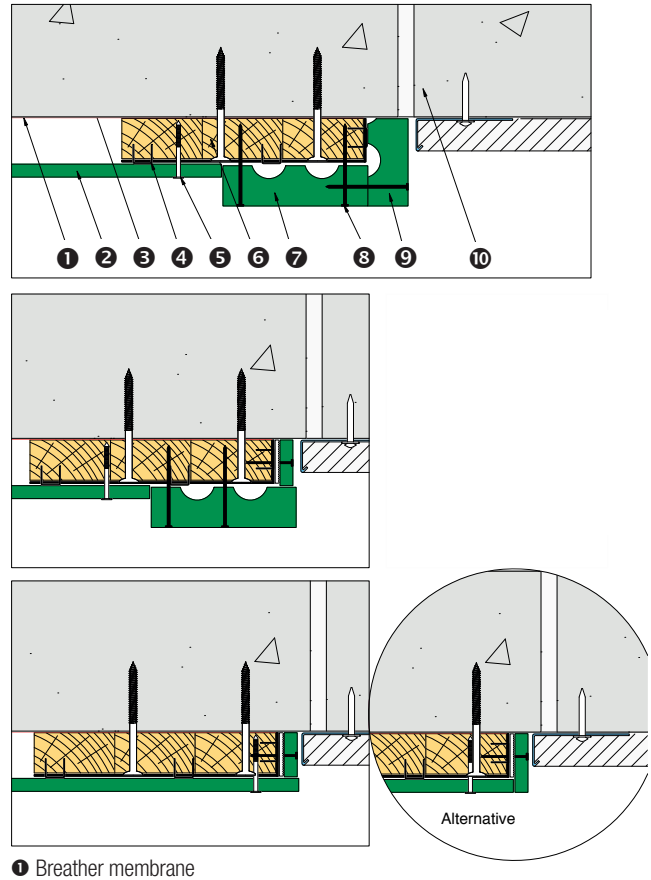

❶ Breather membrane
❷ HardiePlank® cladding
❸ Concrete block
❹ EPDM stapled to batten
❺ 51 × 2.95mm fixing
❻ 50 × 25mm timber
❼ 90 × 25mm HardieTrim® NT3® profile
❽ 51mm 16g fixing
❾ HardieTrim NT3 profile cut to fit
❿ Brickwork

N DISTRICT COUNCIL LU/183/21/DOC

Window Details: HardiePlank® On Edge

Reveal Detail

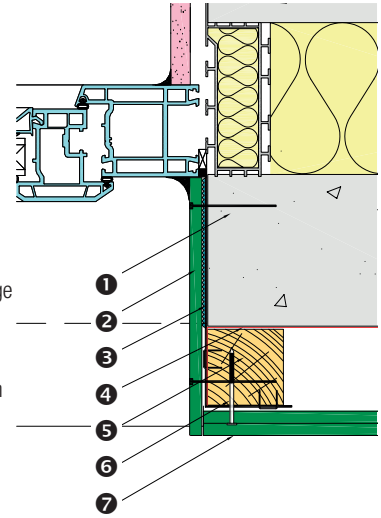

1. Masonry wall
2. HardiePlank® cladding on edge
3. EPDM
4. Breather membrane
5. Timber batten 50mm × 50mm
6. 51mm × 2.95mm fixing
7. HardiePlank cladding

Window Head

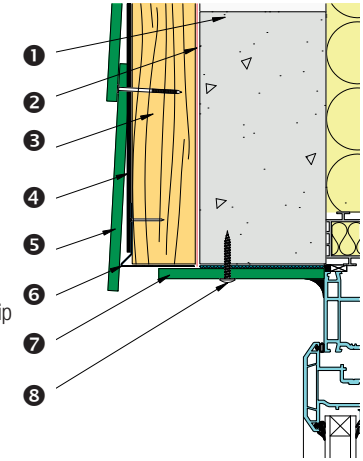

1. Masonry wall
2. Breather membrane
3. Timber battens 50mm × 50mm
4. EPDM
5. HardiePlank® cladding
6. HardiePlank cladding starter strip with ventilation
7. HardiePlank cladding
8. Torx T20 screw

Window Cill

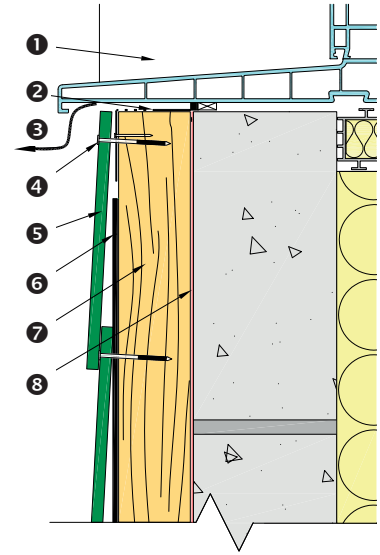

1. HardiePlank cladding
2. Top ventilation profile
3. Ventilation (min. 10mm)
4. 51mm × 2.95mm fixing
5. HardiePlank cladding
6. EPDM
7. Timber batten 50mm × 50mm
8. Breather membrane

N DISTRICT COUNCIL LU/183/21/DOC

Window Details: With HardieTrim® NT3®

Reveal Detail

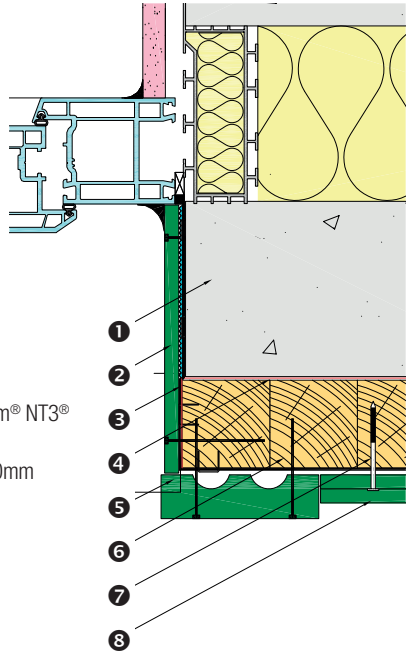

1. Masonry wall
2. HardiePlank® cladding
3. EPDM stapled to batten
4. Breather membrane
5. 90mm × 25mm HardieTrim® NT3® profile
6. Timber batten 50mm × 50mm
7. 51mm × 2.95mm fixing
8. HardiePlank cladding

Window Head

1. HardiePlank® cladding
2. 51mm × 2.95mm fixing
3. Breather membrane
4. Timber batten 50mm × 50mm
5. 90mm × 25mm HardieTrim® NT3® profile
6. HardiePlank ventilation strip
7. Ventilation strip
8. Torx T20 screw

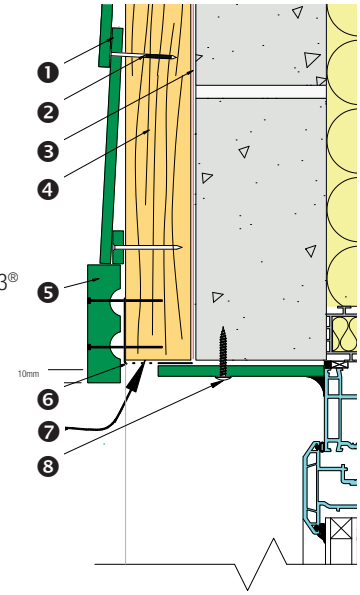

Window Cill

1. HardiePlank® cladding
2. HardiePlank ventilation strip
3. Ventilation (min. 10mm)
4. HardieTrim® NT3® profile
5. 51mm × 2.95mm fixing
6. HardiePlank cladding
7. EPDM
8. Timber batten 50mm × 50mm
9. Masonry

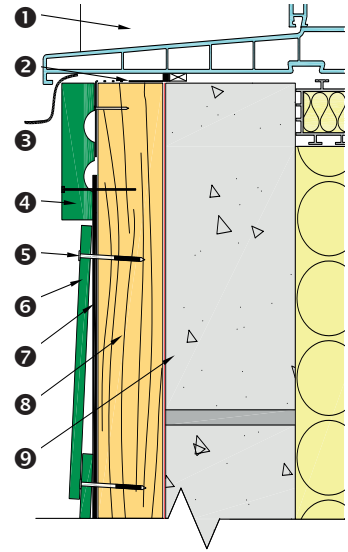

N DISTRICT COUNCIL LU/183/21/DOC

General Arrangement: Vertical Installation

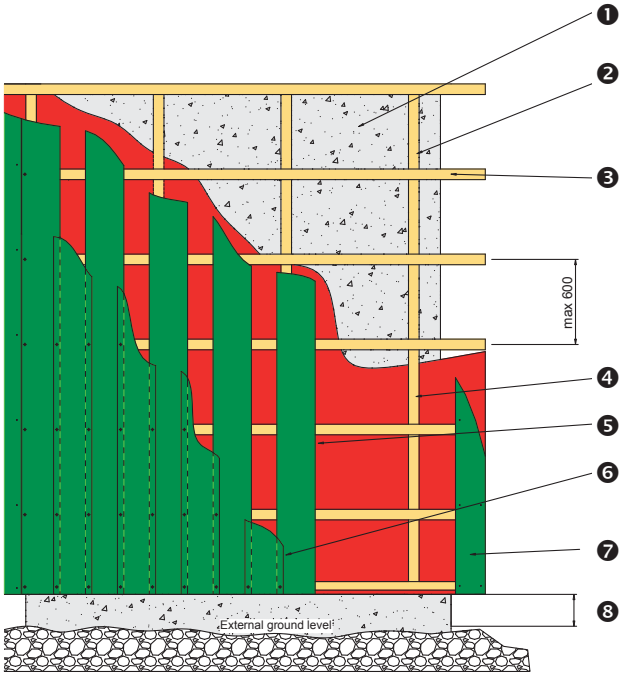

❶ Timber or masonry wall
❷ Vertically installed timber or steel framing battens set off structural wall face
❸ Horizontally installed timber or steel framing battens
❹ Install framing to comply with required wind loading (refer to table page 20) and provide sufficient framing for HardieTrim® NT3® profile
❺ Breather membrane under framing
❻ Vertically installed HardiePlank® cladding – 1st layer
❼ Vertically installed HardieTrim NT3 profile
❽ Minimum 150mm as per building regulations

Overlap Detail: Vertical Installation

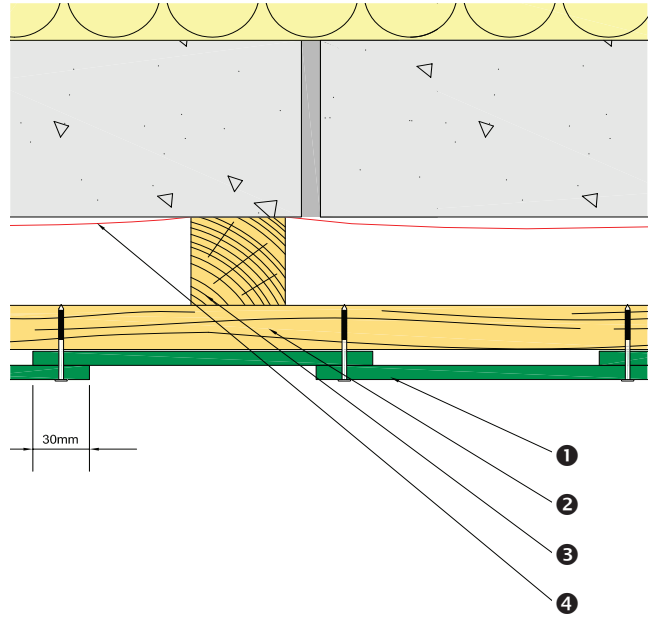

❶ HardiePlank® cladding
❷ 50 × 50mm horizontal timber batten
❸ 50 × 50mm vertical timber batten
❹ Breather membrane

N DISTRICT COUNCIL LU/183/21/DOC