LU/142/13/

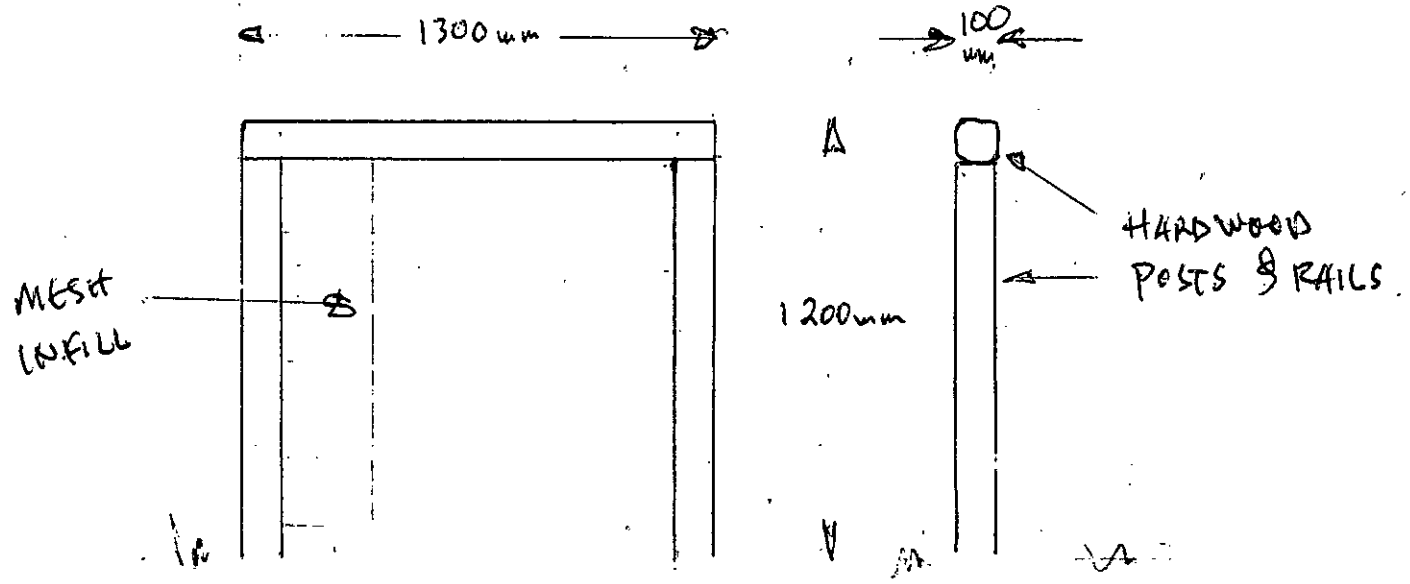

WEST BEACH CAFE, LITTLEHAMPTON.
FENCING DETAIL – TO MATCH EXISTING.

SCALE: 1-20
7/2013

ARUN DISTRICT COUNCIL LU/142/13/