NW101 **Chest**

Strenght training

Norwell Form Function Chest is a seated chest press developing strength in the chest, front of the shoulders and triceps in a simple way.

Chest utilises a portion of the user's body weight as counter weight in the training. Thus the user doesn't need to adjust weight and resistance.

Chest is equipped with a sturdy rubber coated seat which is a safe platform for the training.

Top & side

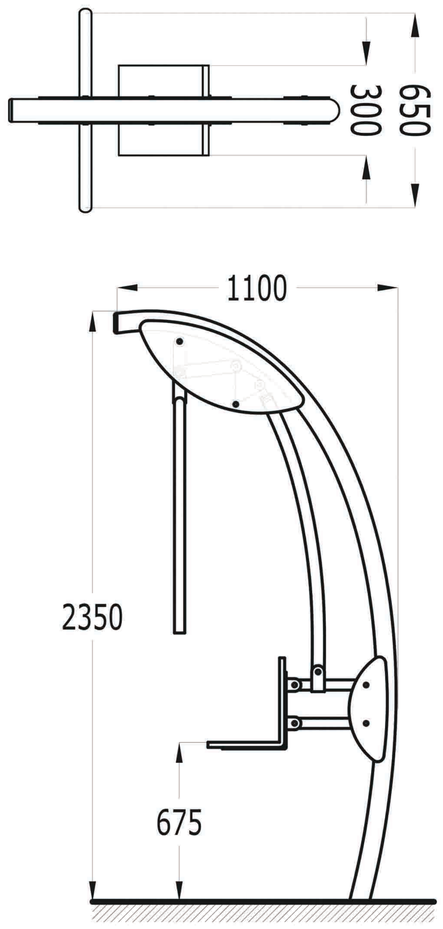

Height

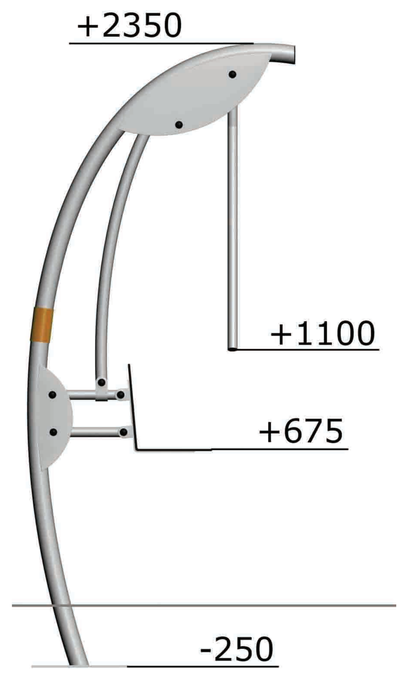

Zone

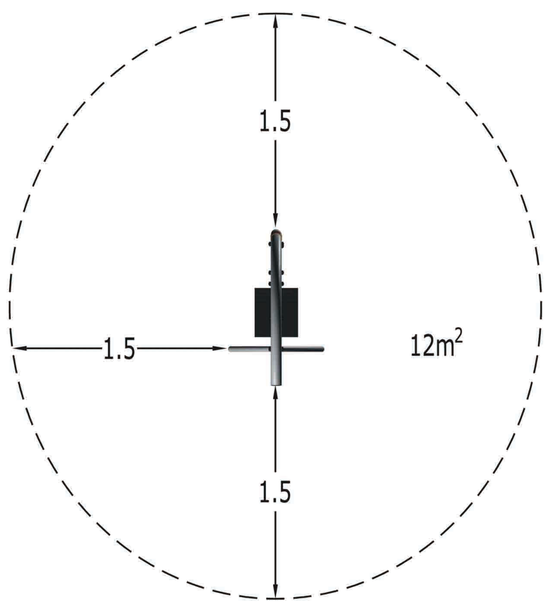

How-to-use