40 LITTLE PADDOCKS – DECENTRALISED ENERGY AND SUSTAINABLE CONSTRUCTION CONSIDERATIONS

Various strategies for the energy and heating of the proposed two chalet bungalows have been reviewed in detail during the design stage.

The thermal insulation performance (U-value) for the walls, floor, roof, and openings is in excess of Building Regulations requirements. Other energy saving features and design elements have also been included in the design as follows: airtightness, the type of heating system and other energy saving measures such as use of low energy light fittings.

Additionally, the elements of the construction of the two houses has also been rationalised to allow for various components of the build to be prefabricated off site (e.g off-site pre-fabrication of the first floor timber frame and roof). This has enabled the reduction of the physical material quantities (e.g. timber and concrete) required for the construction of the dwellings. It has also reduced the transport required in delivering quantities of materials to the site to a minimum.

The most energy demanding element of the two chalet bungalows, the heating, has been closely investigated in order to provide an efficient and very low energy system.

Solar / p.v. panels were reviewed as an option but are practically & economically unviable due to the limited areas of appropriate roof planes on the south facing elevations of no. 39 & no 40. Furthermore, the feasibility of utilising air source heat pumps for the two dwellings was also reviewed but the proximity of the window and door openings; the close boundaries to both dwellings and driveways and the limited garden areas precluded any practical position for the air source heat pumps to be located to meet current regulations.

The following heating proposal and specification is therefore submitted for approval.

SPECIFICATION

BOILER - Valliant EcoTech System 30
Catergory A Boiler HE
Intergral Pump and Bypass

HOT WATER - Megaflo Eco - Indirect
210 Ltr
Grade A
Quick recovery coil
Built in temperature control

CONTROLS - Programmer – Heatmiser TM4 V2, 4 channel
Room thermostat – Drayton RTS

1. Heating Zone and Valve – Honeywell
2. Hot Water – Zone – Honeywell
3. Towel Radiator Zone Valve – Honeywell
   Control return towel zone thermostat

Towel radiators- 1 in each bathroom

Boiler and hot water cylinder in same room to greatly improve 'on' recovery times for hot water.

MEGAFLO **Eco**

Technical data

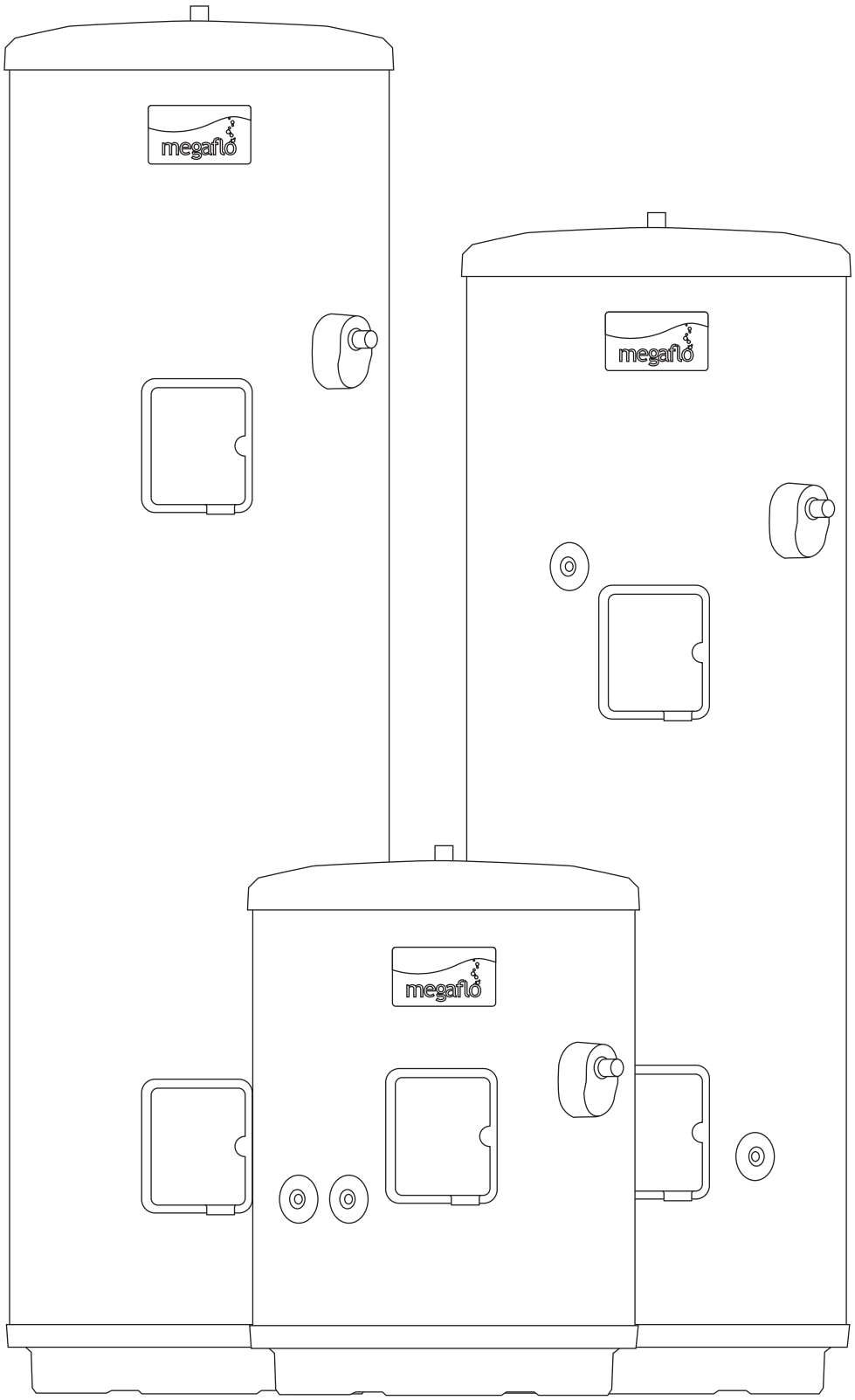

FOR THE ULTIMATE IN HOT WATER PERFORMANCE AND COMFORT

MADE IN THE UK

MEGAFLO **Eco**

Technical data

COMPONENTS

THE FOLLOWING COMPONENTS ARE SUPPLIED AS STANDARD WITH MEGAFLO **Eco**

FACTORY FITTED IMMERSION HEATER(S) AND THERMAL CONTROLS.
INDIRECT MODELS: LONG-LIFE SUPERLOY 825 ALLOY SHEATHED ELEMENT(S) AS STANDARD.
TITANIUM ELEMENT(S) AVAILABLE AS ACCESSORY.
DIRECT MODELS: TITANIUM ELEMENT(S) AS STANDARD.

COLD WATER INLET CONTROL KIT COMPRISING OF:

- 0.3 MPa (3 bar) PRESSURE REDUCING VALVE
- 0.8 MPa (8 bar) PRESSURE RELIEF VALVE (BS EN 1567, BS EN1491, EN 13959)
- ¼ TURN ISOLATING VALVE
- LINE STRAINER
- NON-RETURN VALVE

FACTORY FITTED TEMPERATURE AND PRESSURE RELIEF VALVE SET AT 90°C / 1 MPa (10 bar) (BS EN 1490)

15/22mm TUNDISH

ADDITIONAL THERMOSTAT AND THERMAL CUT OUT (INDIRECT MODELS ONLY)

DRAIN VALVE

WIRING CENTRE (INDIRECT MODELS ONLY)

22mm 2 PORT MOTORISED VALVE (INDIRECT MODELS ONLY)

T&P VALVE INSULATION KIT

MADE IN THE UK

FOR THE ULTIMATE IN HOT WATER PERFORMANCE AND COMFORT
FOR SPECIFICATION ADVICE TEL: 01603 420220 OR EMAIL: SPECIFIER@HEATRAESADIA.COM

ARUN DISTRICT COUNCIL FG/160/20/DOC

MEGAFLO **Eco**

Technical data

TECHNICAL SPECIFICATION

Maximum supply pressure to incoming mains cold water combination valve (supplied)	1.6 MPa (16 bar)
Minimum recommended supply pressure and flow rate	0.15 MPa (1.5 bar) – 20 litres per minute
Operating pressure	0.3 MPa (3 bar)
Inner water container	High grade Duplex stainless steel pressure tested to 15 bar
Thermal insulation (nominal thickness 60mm)	CFC/HCFC free, fire retardant expanded polyurethane foam with zero ozone depletion Global warming potential (GWP) = 3.1
Pressure relief valve	0.8 MPa (8 bar)
Immersion heater rating (AC supply only)	3kW @ 240V 2.8kW @ 230V
Primary coil hydraulic resistance @ 15 l/min	0.0002 MPa (0.002 bar)
Connections	22mm male connections Secondary return ½" BSP female connection (Indirect models)
Domestic Hot Water Expansion	Megaflo Eco has an internal air gap with floating baffle, which accommodates hot water expansion. Meaning that there is no need to fit an external expansion vessel (see diagram below).

ACCESSORIES

Titanium Indirect Control Assembly and Immersion Heater Accessory Pack	95 970 554
Swept Tee for Direct Secondary Return	94 970 033

The unit must be fitted by a suitably qualified installer in accordance with current building regulations. Please contact your local Building Control Body for further advice.

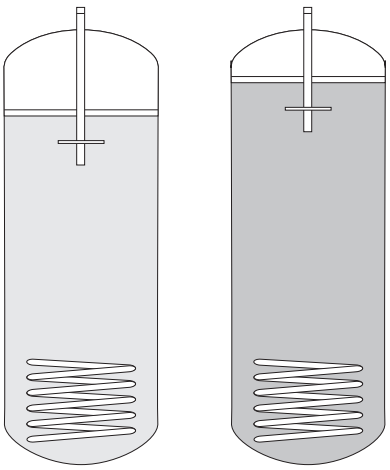

Before expansion

After expansion

MADE IN THE UK

FOR THE ULTIMATE IN HOT WATER PERFORMANCE AND COMFORT

FOR SPECIFICATION ADVICE TEL: 01603 420220 OR EMAIL: SPECIFIER@HEATRAESADIA.COM

ARUN DISTRICT COUNCIL FG/160/20/DOC

MEGAFLO **Eco**

ErP technical data

Direct

Supplier's name or trade mark	Megaflo Eco												
Supplier's model identifier	70D	125DD	145DD	170DD	210DD	210DDD	210DDDD	250DD	250DDD	250DDDD	300DD	300DDD	300DDDD
Storage volume V in litres	92	140	155	182	199	199	199	236	236	236	283	283	283
Mixed water at 40°C V40 in litres	78	167	183	218	241	241	241	307	307	307	359	359	359
The declared load profile	M	M	M	L	L	L	L	XL	XL	XL	XL	XL	XL
The water heating energy efficiency class of the model	C	B	C	C	C	C	C	D	D	D	D	D	D
The water heating energy efficiency in %	38.6	39.2	37.5	38.2	37.5	37.5	37.5	37.8	37.8	37.8	37.4	37.4	37.4
The annual electricity consumption in kWh	3341	1311	1369	2682	2731	2731	2731	3513	3513	3513	4476	4476	4476
Daily fuel consumption Q fuel in kWh	6.110	6.010	6.350	12.380	12.670	12.670	12.670	20.480	20.480	20.480	20.770	20.770	20.770
The thermostat temperature settings of the water heater, as placed on the market by the supplier	60°C												

Indirect

Model(s)	70i	125i	145i	170i	210i	250i	300i
Energy efficiency class	B	B	B	B	B	C	C
Standing loss in W	38	44	49	50	59	67	70
Storage volume V in litres	92	137	155	178	195	233	283

SystemFit Indirect

Model(s)	125SF	145SF	170SF	210SF	250SF	300SF
Energy efficiency class	B	B	B	B	C	C
Standing loss in W	50	55	59	65	70	79
Storage volume V in litres	125	145	170	210	250	300

MADE IN THE UK

FOR THE ULTIMATE IN HOT WATER PERFORMANCE AND COMFORT

FOR SPECIFICATION ADVICE TEL: 01603 420220 OR EMAIL: SPECIFIER@HEATRAESADIA.COM

ARUN DISTRICT COUNCIL FG/160/20/DOC

MEGAFLO **Eco**

Indirect models

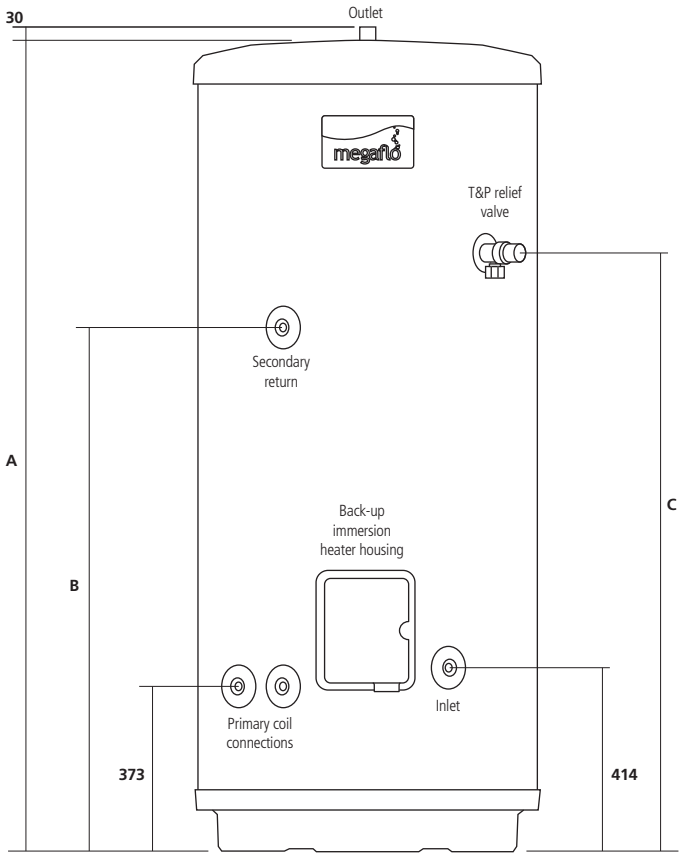

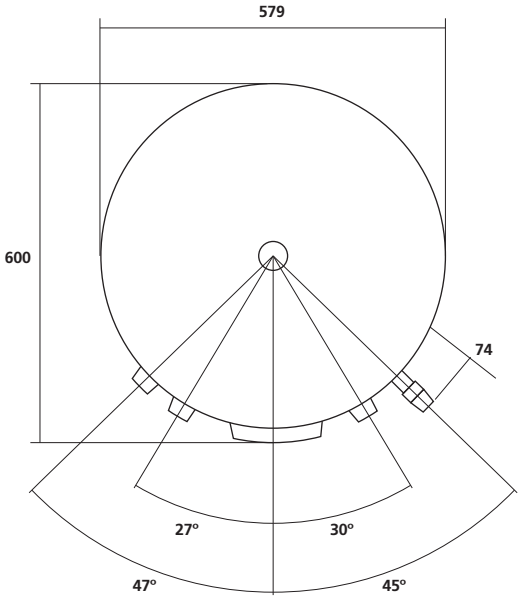

Model	70 i	125 i	145 i	170 i	210 i	250 i	300 i
A Height (mm)	802	1102	1229	1384	1486	1738	2053
B Secondary return (mm)	–	709	810	934	1011	1238	1526
C T&P valve (mm)	495	794	895	1020	1095	1323	1574
Product code	**95050461**	**95050463**	**95050465**	**95050467**	**95050469**	**95050472**	**95050475**
Nominal capacity (litres)	70	125	145	170	210	250	300
Internal expansion with floating baffle	√	√	√	√	√	√	√
Insulation thickness (mm)	60	60	60	60	60	60	60
Immersion heater rating (kW)	1 x 3	1 x 3	1 x 3	1 x 3	1 x 3	1 x 3	1 x 3
Weight empty (kg)	25	31	35	39	43	50	58
Weight full (kg)	125	180	204	233	253	300	358
Coil surface area (m^2)	0.58	0.58	0.72	0.79	0.79	0.79	0.79
Coil heat transfer – primary flow 15 l/min (kW)*	15.4	18.3	18.7	24.3	24.3	23.9	24.5
Standing heat loss (kWh/24h)	0.91	1.05	1.18	1.2	1.42	1.61	1.69
Standing heat loss (kWh/year)	332.15	383.25	430.2	438	518.3	587.65	616.85
Max flow at 3 bar (l/min)**	70	70	70	70	70	70	70
Max flow at 1 bar (l/min)**	40	40	40	40	40	40	40
1st hour performance Δt 45K (l/hr)†	364	474	502	633	673	706	767
Continuous performance Δt 45K (l/hr)†	296	349	357	463	463	456	467
Heat up time Δt 45K primary flow 15 l/min (mins)	17	23	24	22	28	34	39
ErP rating	B	B	B	B	B	C	C

*At primary flow temperature 80°C. **MCWS static pressure. †Calculated using nominal capacities.
All MEGAFLO **Eco** cylinders are manufactured from high grade Duplex stainless steel.

MADE IN THE UK

FOR THE ULTIMATE IN HOT WATER PERFORMANCE AND COMFORT
FOR SPECIFICATION ADVICE TEL: 01603 420220 OR EMAIL: SPECIFIER@HEATRAESADIA.COM

ARUN DISTRICT COUNCIL FG/160/20/DOC

MEGAFLO **Eco**

Direct models

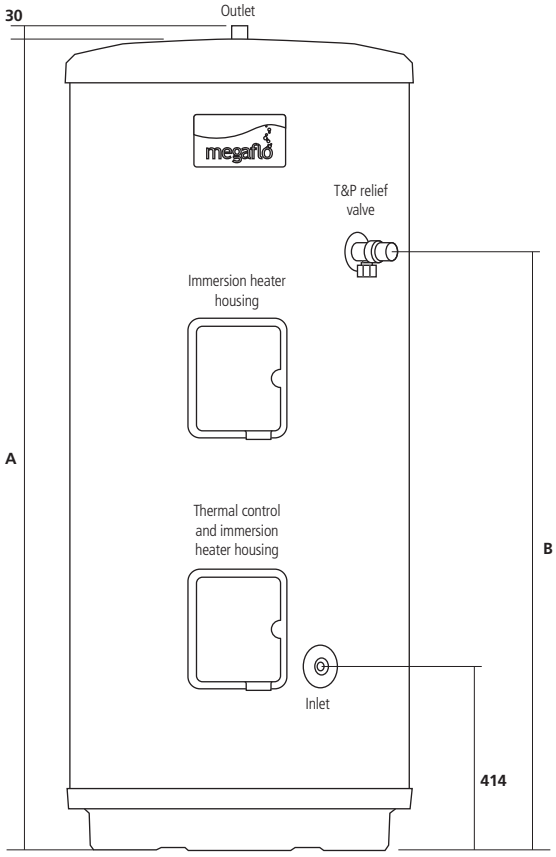

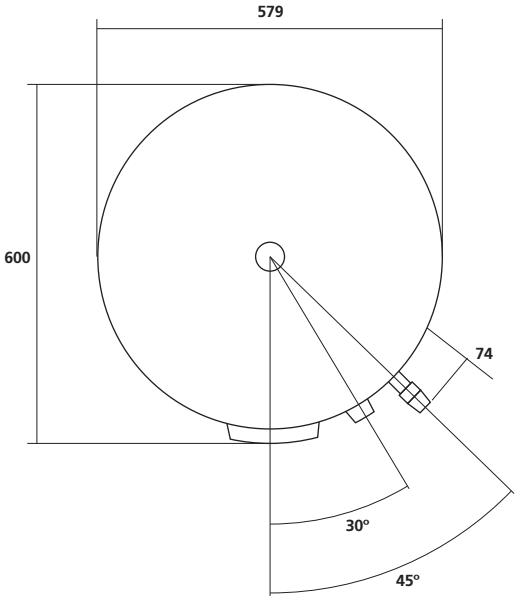

Model	70 D	125 DD	145 DD	170 DD	210 DD	210 DDD	210 DDDD	250 DD	250 DDD	250 DDDD	300 DD	300 DDD	300 DDDD
A Height (mm)	802	1102	1229	1384	1486	1486	1486	1738	1738	1738	2053	2053	2053
B T&P valve (mm)	495	794	895	1020	1095	1095	1095	1323	1323	1323	1574	1574	1574
Product code	**95050460**	**95050462**	**95050464**	**95050466**	**95050468**	**95050480**	**95050476**	**95050470**	**95050471**	**95050477**	**95050473**	**95050474**	**95050478**
Nominal capacity (litres)	70	125	145	170	210	210	210	250	250	250	300	300	300
Internal expansion with floating baffle	√	√	√	√	√	√	√	√	√	√	√	√	√
Insulation thickness (mm)	60	60	60	60	60	60	60	60	60	60	60	60	60
Immersion heater rating (kW)	1 x 3	2 x 3	2 x 3	2 x 3	2 x 3	3 x 3	4 x 3	2 x 3	3 x 3	4 x 3	2 x 3	3 x 3	4 x 3
Weight empty (kg)	23	25	31	34	38	40	42	46	48	50	56	58	60
Weight full (kg)	123	174	200	228	248	251	253	296	298	300	356	358	360
Standing heat loss (kWh/24h)	0.91	1.05	1.18	1.2	1.42	1.42	1.42	1.61	1.61	1.61	1.69	1.69	1.69
Standing heat loss (kWh/year)	332.15	383.25	430.2	438	518.3	518.3	518.3	587.65	587.65	587.65	616.85	616.85	616.85
Max flow at 3 bar (l/min)**	70	70	70	70	70	70	70	70	70	70	70	70	70
Max flow at 1 bar (l/min)**	40	40	40	40	40	40	40	40	40	40	40	40	40
1st hour performance Δt 45K (l/hr)†	127	239	259	284	324	382	439	364	422	479	414	472	529
Continuous performance Δt 45K (l/hr)†	57	114	114	114	114	172	229	114	172	229	114	172	229
Heat up time direct Δt 45K (mins)†	92	71	79	93	102	68	51	121	81	60	146	97	73
ErP rating	C	B	C	C	C	C	C	D	D	D	D	D	D

**MCWS static pressure. †Assuming all elements are energised.
All MEGAFLO **Eco** cylinders are manufactured from high grade Duplex stainless steel.

MADE IN THE UK

FOR THE ULTIMATE IN HOT WATER PERFORMANCE AND COMFORT
FOR SPECIFICATION ADVICE TEL: 01603 420220 OR EMAIL: SPECIFIER@HEATRAESADIA.COM

ARUN DISTRICT COUNCIL FG/160/20/DOC

MEGAFLO **Eco**

SystemFit models

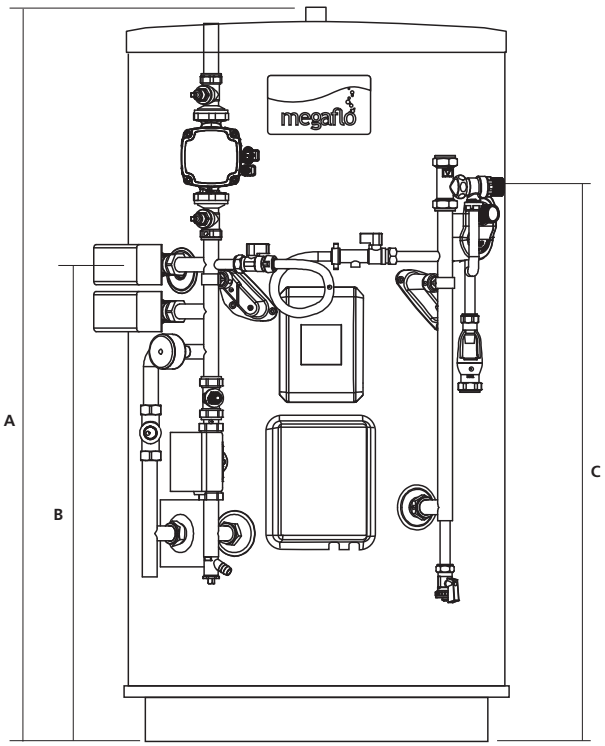

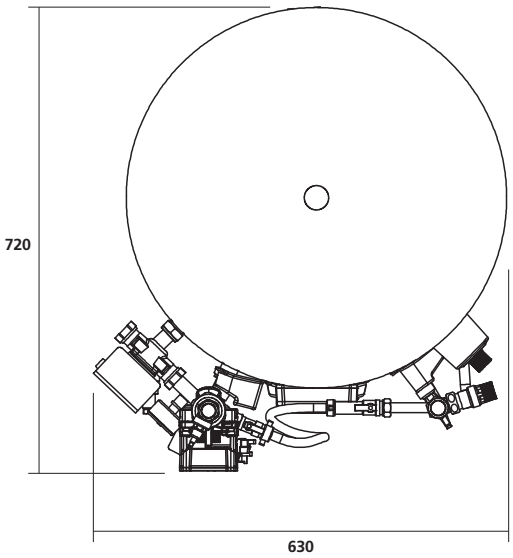

Model	125sf	145sf	170sf	210sf	250sf	300sf
A Height (mm)	1102	1229	1384	1486	1738	2053
B Secondary return (mm)	709	810	934	1011	1238	1526
C T&P valve (mm)	794	895	1020	1095	1323	1574
Product code	**95050450**	**95050451**	**95050452**	**95050453**	**95050454**	**95050455**
Nominal capacity (litres)	125	145	170	210	250	300
Internal expansion with floating baffle	√	√	√	√	√	√
Insulation thickness (mm)	60	60	60	60	60	60
Immersion heater rating (kW)	3	3	3	3	3	3
Weight empty (kg)	43	48	52	55	61	69
Weight full (kg)	183	48	52	55	61	69
ErP rating	B	B	B	B	C	C

All MEGAFLO **Eco** cylinders are manufactured from high grade Duplex stainless steel.

MADE IN THE UK

FOR THE ULTIMATE IN HOT WATER PERFORMANCE AND COMFORT

FOR SPECIFICATION ADVICE TEL: 01603 420220 OR EMAIL: SPECIFIER@HEATRAESADIA.COM

ARUN DISTRICT COUNCIL FG/160/20/DOC

MEGAFLO **Eco SystemFit**

Specification

SYSTEMFIT MODELS:

The MEGAFLO **Eco SystemFit** is factory fitted with a number of components, providing an easier and cleaner installation and also cutting installation time.

COMPONENTS:

- 3 x two-port 230V motorised valve.
- 230V 15/60 circulator pump (plus 2 isolating valves).
- Wiring centre.
- Auto bypass valve.
- Balancing valve.
- Drain cocks.
- Filling loop.
- Combined expansion valve/check valve housing.
- Primary system pressure gauge.
- Temperature and pressure relief valve operating at 90°C/10 bar.
- Tundish.

COMPONENT DETAIL:

Danfoss TP9000 programmable thermostat with timed Domestic Hot Water (DHW) control:

- Programmer dimensions: 135mm (W) x 88mm (H) x 32mm (D).
- Room temperature sensor dimensions: 60mm (W) x 45mm (H) x 21mm (D).
- Power supply: 220/240V ac. 50Hz.
- Switch action: 2 x SPDT, Type 18. Switch rating 220/240V ac, 50/60Hz, 3(1)A.
- Power reserve: Minimum 24 hours.
- Memory back up retained for life of product.
- Enclosure rating: IP30.
- Control temperature range: Selectable 5 to 30°C
- Holiday mode with room temperature setback..
- Maximum ambient temperature: 45°C.

Danfoss TP5000 programmable room thermostat:

- Programmer dimensions: 110mm (W) x 88mm (H) x 28mm (D).
- Power Supply: 2 x AA/MN1500/LR6 alkaline batteries.
- Switching action: SPDT (voltage free).
- Memory back up retained for life of product.
- Control temperature range: Off, 5 to 30°C.
- Type of control: 5/2 day, 24 hour or A/B block programming.
- Ball hardness test: 75°C Honeywell 2 port motorised valves.
- Model No.: V4043H.
- Voltage rating: 230V ac, 50Hz.
- Power consumption: 6W.
- Primary water temperature range: 5 to 88°C.
- Maximum ambient temperature: 52°C.

Automatic differential by-pass valve:

- Model No.: RWC DIFF 200 005.
- Setting range: 0 to 0.05 MPa (0 to 0.5 bar) differential pressure.
- Maximum primary water temperature: 110°C.
- Maximum operating pressure 1.0MPa (10 bar).

PROGRAMMABLE ROOM THERMOSTATS:

The programmers and room temperature sensor are supplied loose such that they can be installed at a convenient location within the property. These items are supplied with their own installation and user instruction leaflet which should be referred to for details of mounting, wiring and programming.

NOTE: The room sensor is wired directly to the programmer not to the wiring centre. The room sensor must be used; it is not possible to integrate a standard room thermostat with the programmer. Temperature setting of the room temperature is also done at the programmer; there is no adjustment at the room temperature sensor. Temperature setting of the stored water in the MEGAFLO **Eco SystemFit** is done at the indirect thermostat housed within the indirect terminal housing on the front of the PremierPlus **SystemFit** unit.

MADE IN THE UK

FOR THE ULTIMATE IN HOT WATER PERFORMANCE AND COMFORT

FOR SPECIFICATION ADVICE TEL: 01603 420220 OR EMAIL: SPECIFIER@HEATRAESADIA.COM

ARUN DISTRICT COUNCIL FG/160/20/DOC

MEGAFLO **Eco**

Installation guidance

TYPICAL CYLINDER USAGE

Application	Indirect	Direct
Bedsit	70i	70D
1 bed 1 bath & shower	125i	125DD/145DD
2 bed 1 bath & shower	125i	145DD/170DD
3 bed 1 bath & shower	145i	210DD
4 bed 1 bath & shower	170i	210DD
4/5 bed 1 bath & shower	210i	250DD
4/5 bed 1 bath & shower	250i	300DD
Light commercial use	250i	250DDD/250DDDD 300DDD/300DDDD
Other commercial use	300i	250DDD/250DDDD 300DDD/300DDDD
Figures are for guidance only and are based on BS8558 recommendations. Actual usage requirements should be assessed to select correct cylinder.		

OUTLET / TERMINAL FITTINGS

The MEGAFLO **Eco** can be used in conjunction with most types of terminal fittings.

It is advantageous in many mixer showers to have balanced hot and cold supplies, in these instances the balanced cold water supply should be teed off the supply to the MEGAFLO **Eco** immediately after the cold water combination valve (see illustration on page 10). Branches to cold drinking outlets should be taken before the valve.

Outlets situated higher than the MEGAFLO **Eco** will give outlet pressures lower than that at the heater, a 10m height difference will result in a 1 bar pressure reduction at the outlet fitting.

NOTE: Terminal fittings should have a rated operating pressure of at least 0.8 MPa (8 bar).

LIMITATIONS

The MEGAFLO **Eco** unvented water heater should not be used in any of the following circumstances:

Solid fuel boilers or any other boiler in which the energy input is not under effective thermostatic control unless additional and appropriate measures are installed.

Gravity circulation primaries.

Steam heating plant unless additional and appropriate safety devices are installed.

Ascending spray type bidets or any class 5 back syphonage risk requiring that a type AA, AB, AD or AG air gap is employed.

Water supplies that have either inadequate pressure / flow rate or where the supply may be intermittent.

Situations where it is not possible to safely convey any discharging water from the safety valves.

Areas where water consistently contains a high proportion of solids, e.g. suspended matter that could block the strainer, unless adequate filtration can be ensured.

INSTALLATION REQUIREMENT

The installation must be carried out in accordance with the appropriate Building Regulations & Technical Standards. England & Wales – G3. Scotland – Section 4.9. Northern Ireland – P5. Furthermore in accordance with the Water Fittings Regulations (England & Wales) or Water Byelaws (Scotland).

WATER SUPPLY

It should be noted that the incoming mains water supply will be supplying both the hot and cold water requirements.

It is recommended that the maximum water demand is assessed and the water supply checked to ensure the demand can be met.

NOTE: A high mains water pressure will not always guarantee high flow rates.

Wherever possible the main supply pipe should be in 22mm or greater.

The minimum mains water supply requirements should be 0.15 MPa (1.5 bar) working pressure and 20 litres per minute flow rate. At these values outlet flow rates may be poor if several outlets are used simultaneously. The higher the available pressure and flow rate the better the system performance will be.

The MEGAFLO **Eco** has an operating pressure of 0.3 MPa (3 bar) which is controlled by the Cold Water Combination Valve. This valve can be connected to a maximum mains supply pressure of 1.6 MPa (16 bar).

The water supply must be of wholesome water quality (Fluid Category 1 as defined by the Water Regulations 1999).

The MEGAFLO **Eco** is to be used for the storage of wholesome water (max.250mg/l chloride).

ELECTRICAL SUPPLY

The MEGAFLO **Eco** must be earthed.

The MEGAFLO **Eco** is suitable for AC supply only.

Electrical installation must be carried out by a competent electrician and be in accordance with the latest I.E.E. wiring regulations.

SECONDARY CIRCULATION

If a secondary circulation system is required using an indirect cylinder it is recommended that it be connected to the MEGAFLO **Eco** as shown in the diagram on page 10.

If a secondary circulation system is required using a direct cylinder it is recommended that it be connected to the MEGAFLO **Eco** via a swept tee joint into the cold feed to the unit. A swept tee joint is available as an accessory (order code no. 94970033).

The secondary return pipe bore should be sized accordingly and fitted with an appropriate check valve to prevent backflow. A suitable WRAS approved bronze circulation pump will be required.

NOTE: On larger systems, due to the increase in water content, it may be necessary to fit additional expansion volume to the secondary system by fitting an external expansion vessel to the circuit. This should be done if the capacity of the secondary system exceeds 10 litres.

As a guide:

Pipe capacities
15mm O/D = 0.13 litres per metre
(10 litres = 77m)

22mm O/D = 0.38 litres per metre
(10 litres = 26m)

28mm O/D = 0.55 litres per metre
(10 litres = 18m)

In direct electric installations where a secondary circulation is required particular attention should be paid by the installer to maintain the return water temperature (guidelines state that a minimum of 55° return temperature is advisable). Factors such as, but not limited to, secondary circulation flow rates, minimising heat loss of all secondary circuit pipework and timed operation during periods of high demand are critical to the correct operation and longevity of the heating element(s) and thermostats.

NOTE: Secondary circulation is not recommended for direct electric units using off-peak tariffs where the secondary circulation is not controlled in conjunction with the heat source as performance can be affected.

MADE IN THE UK

ARUN DISTRICT COUNCIL FG/160/20/DOC

MEGAFLO **Eco**

Installation guidance

TYPICAL INSTALLATION – DIRECT

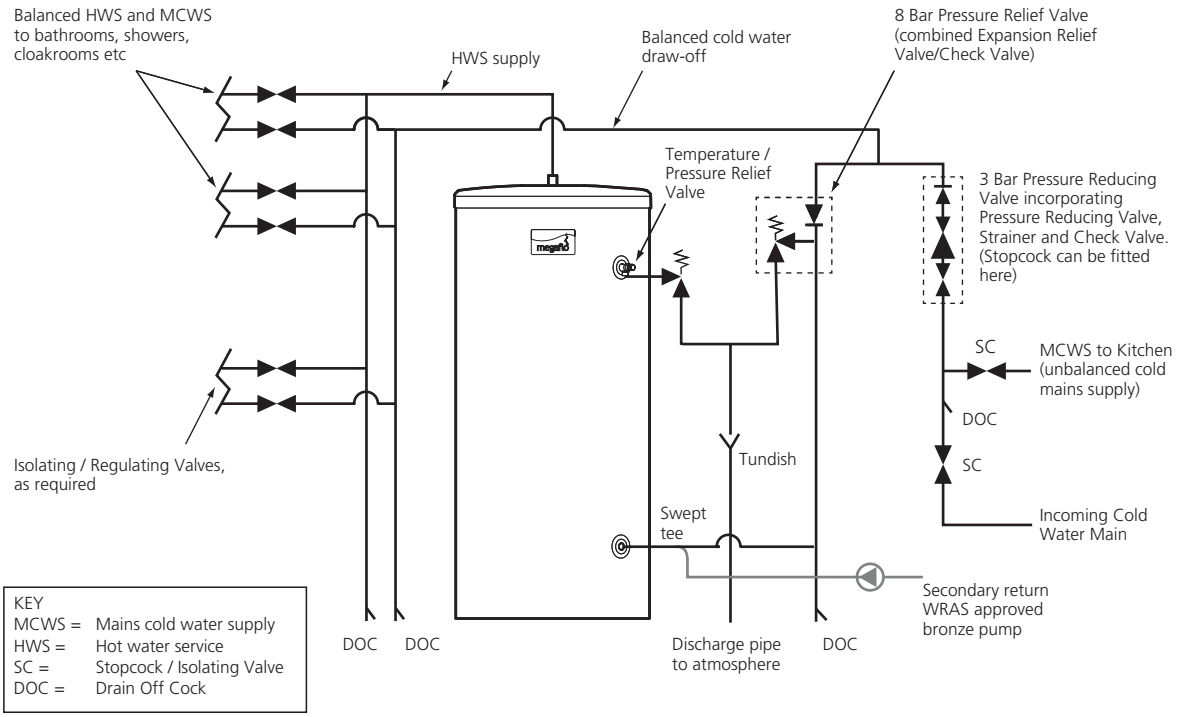

TYPICAL INSTALLATION – INDIRECT

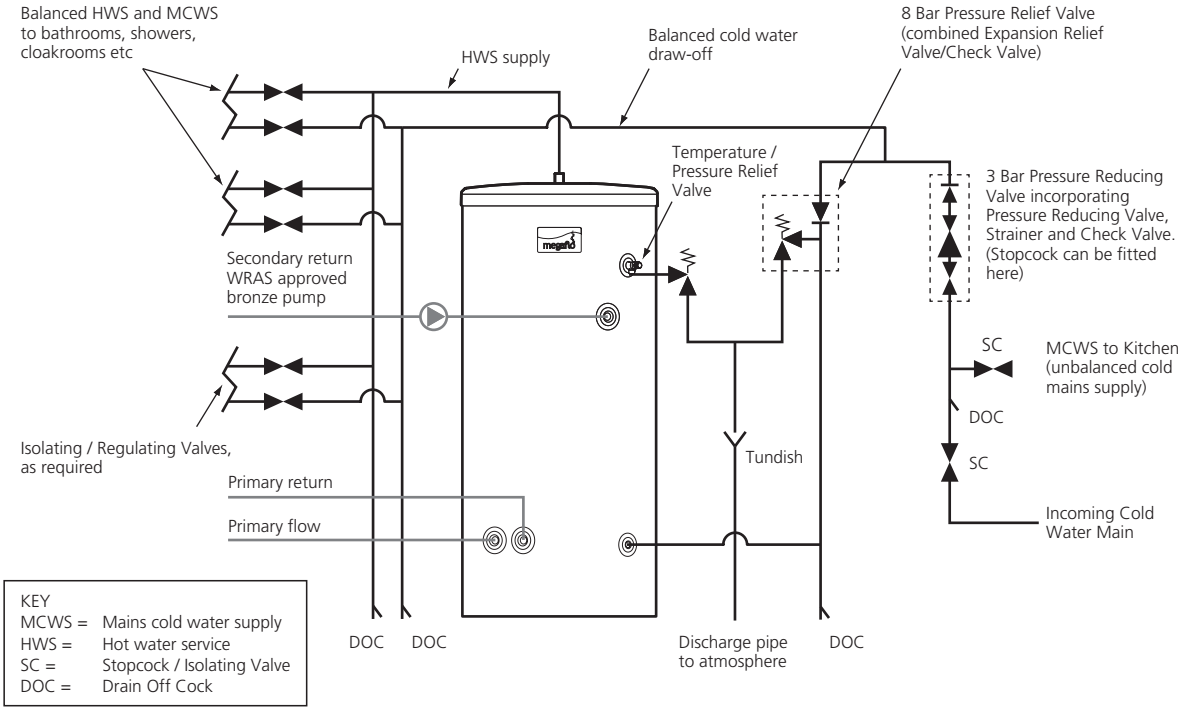

FOR THE ULTIMATE IN HOT WATER PERFORMANCE AND COMFORT

FOR SPECIFICATION ADVICE TEL: 01603 420220 OR EMAIL: SPECIFIER@HEATRAESADIA.COM

ARUN DISTRICT COUNCIL FG/160/20/DOC

MEGAFLO **Eco**

Codes of practice / legislation

EU DIRECTIVES:

– Pressure Equipment Directive 97/23/EC.

– Low Voltage Directive (LVD) 2006/95/EC.

– Electromagnetic Compatibility (EMC) Directive 2004/1 08/EC.

LEGISLATION:

– Building Regulations Part G and Part L (England and Wales).

– Scottish Building Standards Section 4 and Section 6.

– Building Regulations (Northern Ireland) Parts F1 and F2 and Part P.

– Water Supply (Water Fittings) Regulations (England and Wales).

– The Water Byelaws 2004 (Scotland).

– Water Supply (Water Fittings) Regulations (Northern Ireland).

STANDARDS:

– Relevant clauses of the following standards are complied with:

  – EN 12897 – Specification for indirectly heated unvented cylinders.

  – EN 60335-2-21 – Safety-Particular requirements for storage water heaters.

– The stainless steel materials used comply with the relevant clauses of:

  – EN 10088 – Technical delivery conditions for sheet/plate and strip of corrosion resisting steels for general purposes.

COMPONENTS SUPPLIED COMPLY WITH THE FOLLOWING STANDARDS:

– BS EN 1490 Building Valves – Combined Temperature and Pressure Relief Valves.

– BS EN 1491 Building Valves – Expansion Valves.

– BS 6144 Specification for Expansion Vessels Using An Internal Diaphragm For Unvented Water Supply Systems.

– BS EN 1567 Building Valves – Water Pressure Reducing Valves and Combination Reducing Valves.

– BS EN 60730-1 Automatic Electrical Controls – For households and similar use. Part 1: General Requirements.

– BS EN 60730-2-8 Automatic Electrical Controls – Particular Requirements for Electrically Operated Water Valves.

– BS EN 13959 Anti-pollution Check Valves.

THE USE OF THESE WATER HEATERS WILL AID IN COMPLIANCE WITH:

– Health and Safety Executive Approved Code of Practice L8: The control of legionella bacteria in water systems.

– BS EN 806 Parts 1 to 5: Specification for installations inside buildings conveying water for human consumption.

– BS 8558 Guide to the design, installation, testing and maintenance of services supplying water for domestic use within buildings.

– Chartered Institute of Building Services Engineers Guide B and Guide F.

MANUFACTURED IN A FACTORY APPROVED TO:

– BS EN ISO 9001.

– OHSAS 18001.

– ISO 14001.

APPROVALS:

– Kiwa Certification Number: 1011702.

– Nemko Certification Number: P10213136/A3.

MADE IN THE UK

ARUN DISTRICT COUNCIL FG/160/20/DOC

Notes

MEGAFLO, HURRICANE WAY,
NORWICH, NORFOLK, NR6 6EA

MEGAFLO may introduce modifications to their products from time to time. Consequentially the details given in this brochure are subject to alteration without notice.

Contacts

Specification Advice Hotline

T: 01603 420220
F: 01603 420229
E: specifier@heatraesadia.com
www.heatraesadia.com

Please recycle this product once you have finished with it.

BY HEATRAESADIA

95 900 834 Issue 2 November 2015

ARUN DISTRICT COUNCIL FG/160/20/DOC