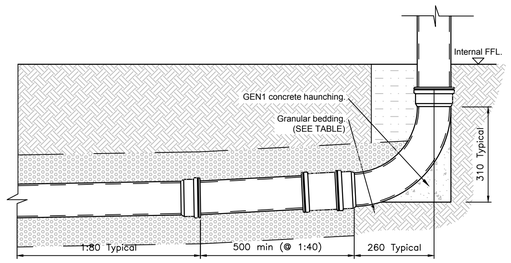

DETAIL OF FOUL REST BEND
(Scale 1:20)

RESIDUAL HAZARDS

In addition to the hazards/risks normally associated with the type of work detailed on this drawing, note the following:

1. Unknown services/depths within work zone. Contractor to undertake necessary precautions.
2. The works will involve the movement of plant and machinery within a live carriageway and footway. There is a risk of potential conflict between plant/machinary and private vehicles/pedestrains. Contractor to undertake necessary precautions and ensure suitable traffic management is in place prior to commencement.

It is assumed that all works will be carried out by a competent contractor working, where appropriate, to an approved risk assessment and method statement

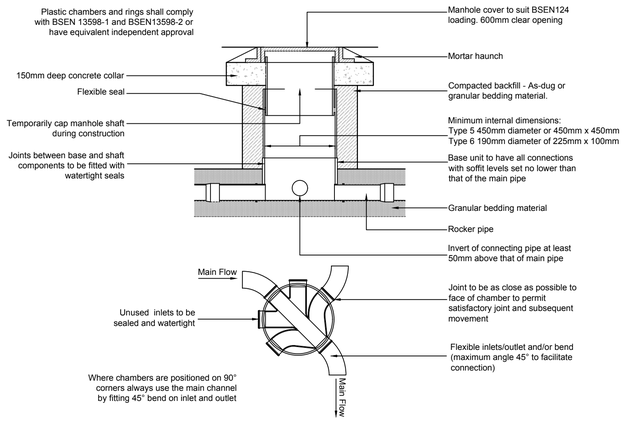

TYPICAL ACCESS CHAMBER DETAIL - TYPE 5 & 6 (FOOTPATHS AND PRIVATE DRIVES)
1m MAXIMUM DEPTH TO FROM COVER TO PIPE SOFFIT. (NON ENTRY)
LOCATED IN AREAS SUBJECT TO LIGHT VEHICLES AND FOOTPATHS

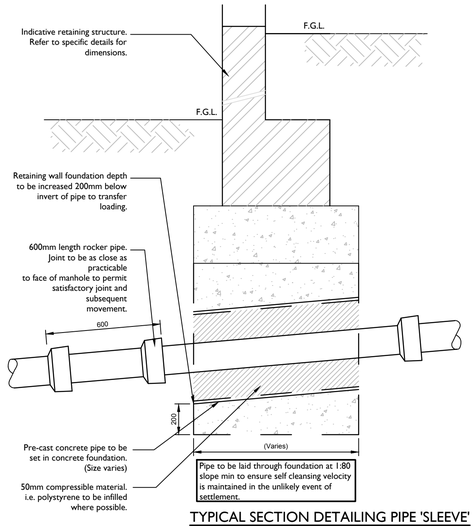

TYPICAL SECTION DETAILING PIPE 'SLEEVE' THROUGH BRICKWORK RETAINING WALL/FOUNDATION
(Scale 1:20)

RESIDUAL HAZARDS

In addition to the hazards/risks normally associated with the type of work detailed on this drawing, note the following:

1. Unknown services/depths within work zone. Contractor to undertake necessary precautions.
2. The works will involve the movement of plant and machinery within a live carriageway and footway. There is a risk of potential conflict between plant/machinary and private vehicles/pedestrains. Contractor to undertake necessary precautions and ensure suitable traffic management is in place prior to commencement.
3. The work will involve the construction of a new headwall and outfall to the existing watercourse. Contractors should take care and necessary precautions when working within close proximity of water, particularly where manual handling may be required.
4. In order to connect the development to the existing sewer(s), work will involve contractors interacting with live sewers. Contractors should take necessary precautions.

It is assumed that all works will be carried out by a competent contractor working, where appropriate, to an approved risk assessment and method statement

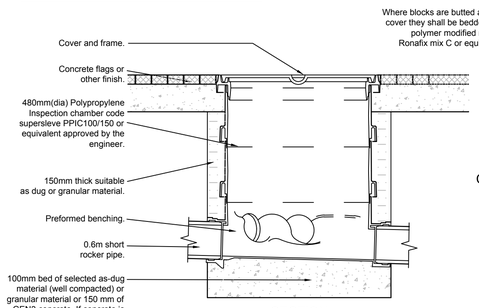

SECTION

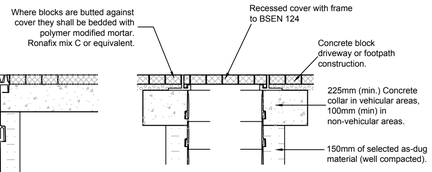

CHAMBER COVER IN DRIVE OR FOOTPATH

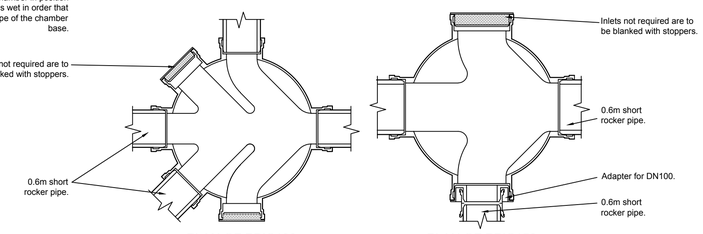

PLAN OF PPIC100 PLAN OF PPIC150

POLYPROPYLENE INSPECTION CHAMBER DETAIL (480mm Dia)
(Scale 1:20)
Depth to invert of less than 930mm.
Depth to invert with concrete collar of less than 1.2m.

Recessed Covers:

All manholes and/or inspection chambers located within paths, patio's or driveways shall be installed with a recessed cover and shall be appropraitely infilled to match the material finish.

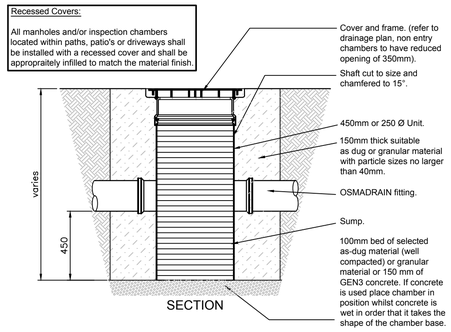

SECTION

POLYPROPYLENE SHALLOW SILT TRAP (CATCHPIT) DETAIL (450 or 250 Ø)
(Scale 1:20)

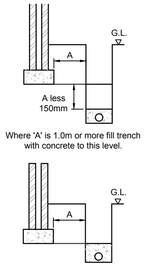

DETAIL OF PIPE RUNS NEAR BUILDINGS
(Not to Scale)

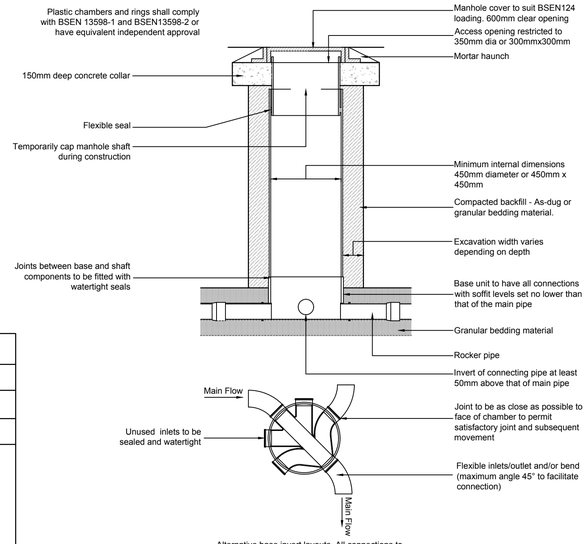

TYPICAL ACCESS CHAMBER DETAIL - TYPE 4 (FOOTPATHS AND PRIVATE DRIVES)
3m MAXIMUM DEPTH TO FROM COVER TO PIPE SOFFIT. (NON ENTRY)
LOCATED IN AREAS SUBJECT TO LIGHT VEHICLES AND FOOTPATHS

PERMITTED PIPE/BEDDING TYPES

	DEPTH OF COVER BELOW ROADS	
	1.2m-3.5m	LESS THAN 1.2m
PIPE BEDDING	TYPE S	TYPE Z
PIPE TYPE	CONCRETE CLASS M TO BS:5911 OR VITRIFIED CLAY TO BS:65, WITH FLEXIBLE JOINTS SUPER STRENGTH CLASS FOR 225 AND 300mmØ. EXTRA STRENGTH CLASS FOR ALL OTHER SIZES.	CONCRETE CLASS M TO BS:5911 OR VITRIFIED CLAY TO BS:65, WITH FLEXIBLE JOINTS SUPER STRENGTH CLASS FOR 225 AND 300mmØ. EXTRA STRENGTH CLASS FOR ALL OTHER SIZES.

Minimum Dimensions for Access Fittings and Chambers

Type	Internal Sizes: Depth to invert (m)	Internal Sizes: Size of largest pipe (DN)	Internal Sizes: Length x Width (mm)	Internal Sizes: Circular (mm)	Cover Sizes: Length x Width (mm)	Cover Sizes: Circular (mm)
Rodding Eye	As Drain but Minimum 100mm					
Shallow Access						
Small	0.6 or less	150	150x100	150	150x100	150
Large			225x100		225x100	
Inspection Chamber	0.6 or less			190		190
	1.2 or less	150	450x450	450	450x450	450
	1.2 - 3.0		450x450	450	300x300	350
Manhole	1.5 or less	150	675x750	1200	675x750	n/a
		225	675x1200	1200	1200x675	n/a
		300	675x1200	1200	1200x675	n/a
		>300	DN+450 x1800	The larger of 1800 or (DN+450)	1200x675	n/a
	Over 1.5	225	1200x1000	1200	600x600	600
		300	1200x1075	1200	600x600	600
		375-450	1350x1225	1200	600x600	600
		>450	DN+775 x1800	The larger of 1800 or (DN+775)	1200x675	600
Manhole Shaft	Over 2.7		900x840	900	600x600	600

BUILDING REGULATIONS MINIMUM DIMENSIONS FOR MANHOLES
(Not to Scale)
This plan complies with the Building Regulations 2002 Section 'H' - Drainage & Waste Disposal.

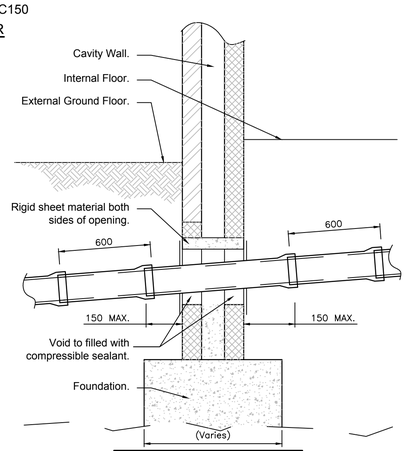

Note:
Arched or lintelled opening to give 50mm min clearance all around the pipe. mask opening both sides with rigid sheet material to prevent overspill of fill or entry for vermin.

TYPICAL SECTION PIPE PASSING THROUGH WALL PIPE THROUGH LINTELLED OPENING
(Scale 1:20)

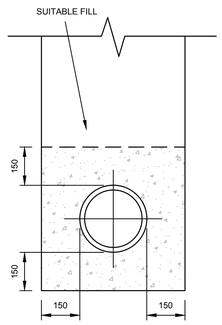

CROSS SECTION

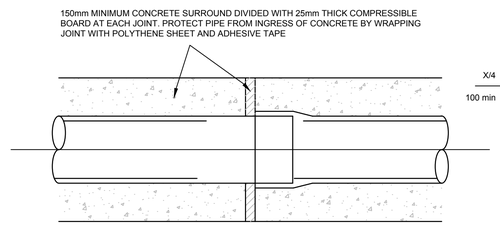

SIDE ELEVATION

TYPE Z BEDDING (CONCRETE ENCASED PIPES) PROTECTION FOR PIPES WITH LESS THAN 900mm COVER
SCALE NTS

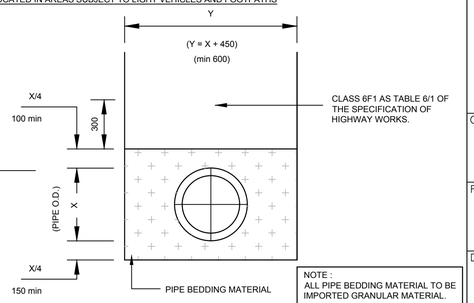

NOTE :
ALL PIPE BEDDING MATERIAL TO BE IMPORTED GRANULAR MATERIAL.

TYPE S PIPE BEDDING GRANULAR BED AND SURROUND
SCALE NTS

A1

NOTES

1. This drawing is to be read in conjunction with all other RGP drawings, and with all relevant Architect's and Engineer's drawings and specification. Any discrepancies found are to be reported immediately to the Engineer.
2. RGP accepts no responsibility for inaccuracies in data provided by third parties such as topographic surveys or Ordnance Survey mapping.
3. Do not scale, work to figured dimensions only. All dimensions are in millimeters unless noted otherwise and all levels are in metres from the topographic survey datum.
4. Any information given regarding existing underground services is given in good faith after consultation with the relevant authority, however accuracy is not certain. The main contractor is responsible for checking all information on site prior to work commencing and taking due care whilst undertaking the works.
5. All dimensions to be checked on site. All details and dimensions relating to sub-contractors work must be checked and agreed between the sub-contractor or supplier and the general contractor.
6. The electronic information from this drawing can not be guaranteed as dimensionally drawn exact. Figured dimensions must be used for setting out and detailing. RGP logos and company information must be removed from copies if information is re-used.
7. The main contractor is responsible for the design of all temporary works, and is also responsible for the safe maintenance and stability of existing buildings at all times.
8. The main contractor is responsible for dealing with all occurrences of ground water during the construction period.
9. The contractor must comply with all current legislation relating to health & safety.
10. All products specified shall be installed in strict accordance with the manufacturers recommendations and instructions. If there are discrepancies between that information and the details on any RGP drawings, the manufacturers instructions must be used.
11. Contractor to confirm all invert levels where connections are proposed prior to commencing any drainage works. Contractor to commence drainage works at the point of discharge.

DRAINAGE NOTES:

12. All drainage works to be constructed in strict accordance with specification of the local authority, building regulations, sewers for adoption, BS8301 & BSEN.752-1.
13. For location and setting out of building drainage points refer to architects drawings.
14. All pipe runs near buildings to comply with the building regulations 2002 Part H1. Where a pipe is within 1m of a foundation the trench shall be filled with class GEN3 concrete up to the lowest level of the foundation. Where the trench is further than 1m from the foundation, the trench shall be filled with class GEN3 concrete to a level below the lowest level for the foundation equal to the distance from the foundation less 150mm. In both cases the pipe shall be bedded and surrounded in 150mm thick class GEN3 concrete.
15. Where pipes, external to the structures, have a depth to soffit from ground level of less than 450mm they shall have a class GEN3 concrete encasement (150mm thick).
16. Where a pipe, under a carriageway, has a depth of cover of less than 1.2m the pipe shall be laid with a concrete bed and surround.
17. In any circumstances where pipes are bedded and surrounded in concrete flexible joints should be provided. Compressible boards (fibreboard or polystyrene) shall be provided at a maximum of 8m centres (coincding with pipe joints). The boards shall be pre-cut to pipe diameter and to a height and width equal to the concrete cross section. A board thickness of 18mm for pipes up to 450mm nominal diameter and 36mm for pipes over 450mm nominal diameter.
18. All private building drainage shall be constructed in strict accordance with BSEN.752-1. unless otherwise specified building drainage shall be 100mm diameter and shall be laid at a minimum gradient of (<1l/s = 1 in 40/>1l/s = 1 in 80) for foul drains and 1 in 80 for surface water drains.
19. All pipes, bends and junction for private building drainage shall be upvc conforming to BS4660 and BS5481 as appropriate and shall be laid in accordance with the manufacturer's specification.
20. All gully connections other than at manholes to be 'y' junctions. All road gully connections to be 150mm diameter.
21. All stub stacks to be fitted with air admittance valves where branch drain exceeds 12m except at the head of the run. Soil vent pipes located at the head of a run to terminate to fresh air.
22. All connections to be soffit to soffit unless otherwise noted.
23. All concrete and concrete products to be in accordance with BRE 363 for sulphates.
24. The locations and sizes of all svps and rwps shall be cross referenced against the architects drawings during setting out.
25. The precise depth and location and size of existing pipes or manholes where connections or diversion are proposed must be confirmed and reported to the engineer prior to commencement.

RGP SUPPORTING DRAWINGS:

Drg No.	Drg Title.
001	Engineering Layout - Drainage, Proposed Levels and Contours
002	Engineering Layout - Surface Finishes & Setting Out
003	Construction Details Sheet 1 of 2

DRAFT

Rev.	Date	Amendments	Drawn	Appr.
-	- 31/01/2018	- Original Issue	- SPB	- MJA

rgp Design
Transport Planning and Infrastructure Design Consultants
Metro House, Northgate, Chichester, West Sussex, PO19 1BE
Tel: 01243 410418 Fax: 01483 861682 www.rgp.co.uk

Client
Knightsgate UK Ltd

Project
Land at 59 Elm Grove, Barnham, West Sussex PO22 0HJ

Drawing Title
Construction Details (Sheet 2 of 2)

Scale	Drawn By	Checked By	Approved By
As shown	SPB	MJA	MJA

Date	Drawing No.	Rev.
January 2018	2017/D1393/004	-